AS/NZS 4777.1:2016

Australian/New Zealand Standard

Grid connection of energy systems via inverters

Part 1: Installation requirements

AS/NZS 4777.1:2016

STANDARDS NEW ZEALAND
PAEREWA AOTEAROA

STANDARDS Australia

Online Library subscription service PDF Terms & Conditions

An Authorised User may download a single copy of a document and retain that copy on their personal computer for a maximum of five working days for their internal purposes. At the expiry of five working days, the Document must be deleted from the Authorised User's computer.

Each Authorised User may print one hard copy of any Document for their internal purposes. These copies may not be used to build up a hard copy reference collection. A reference collection is defined as a collection comprising more than 10% of the number of the Documents within the Authorised User's subscription portfolio. All hard copies of Documents must be destroyed within 12 months or at the end of their course whichever comes first.

Copyright subsists in each of the Documents and the full title to that copyright is at all times retained by Standards New Zealand.

Except as otherwise may be expressly permitted under the Copyright Act 1994 Authorised Users will undertake not to copy, modify, merge with other software or documents, or circulate electronically without securing the prior written permission of Standards New Zealand.

Under no circumstance may a Document, whether in electronic or hard copy form, be sold, or transferred to a third party.

Under no circumstances may any Document be placed on a network of any sort without express permission of Standards New Zealand.

Authorised Users may not modify, adapt, translate, reverse engineer, decompile, disassemble or create derivative works based on the Documents.

Right of access to the subscription service is personal to Authorised Users and can not be transferred, sold, leased, rented or loaned via a time-sharing, service bureau or other arrangement.

All Authorised User identification information, including logins and passwords, are to be kept secret and secure.

No Authorised User may attempt to damage, interfere or harm the Standards New Zealand website, or any network, or system underlying or connected to the subscription service.

Copyright Standards New Zealand

auto login of Electrical Workers Licensing Group is licenced to temporarily download this document.
Electrical Workers Licensing Group may print this document but not more than 10% of the documents subscribed to may be held in printed form at any one time.

auto login of Electrical Workers Licensing Group is licenced to temporarily download this document.
Electrical Workers Licensing Group may print this document but not more than 10% of the documents subscribed to may be held in printed form at any one time.

Copyright Standards New Zealand

This joint Australian/New Zealand standard was prepared by joint Technical Committee EL-042, Renewable Energy Power Supply Systems and Equipment. It was approved on behalf of the Council of Standards Australia on 22 August 2016 and by the New Zealand Standards Approval Board on 17 August 2016.

This standard was published on 30 September 2016.

The following are represented on Committee EL-042:

Australasian Fire and Emergency Service Authorities Council
Australian Energy Market Operator
Australian Industry Group
Australian PV Association
Australian Solar Council
Clean Energy Council
Clean Energy Regulator
Construction, Environment and Workplace Protection, ACT Government
Consumer Electronics Suppliers Association
CSIRO
Electrical Compliance Testing Association
Electrical Regulatory Authorities Council
Electrical Safety Organisation, New Zealand
Electricity Engineers Association, New Zealand
Energy Networks Association
Engineers Australia
Institute of Electrical and Electronics Engineers
Institute of Electrical Inspectors
Institution of Professional Engineers New Zealand
Joint Accreditation System of Australia and New Zealand
Master Electricians Australia
National Electrical and Communications Association
New Zealand Electrical Institute
NSW Fair Trading
Office of the Technical Regulator, SA
Solar Energy Industries Association
Sustainable Electricity Association New Zealand
Sustainable Energy Association
University of New South Wales
Worksafe New Zealand

Keeping standards up to date

Standards are living documents which reflect progress in science, technology, and systems. To maintain their currency, all standards are periodically reviewed, and new editions are published. Between editions, amendments may be issued. Standards may also be withdrawn. It is important that readers assure themselves they are using a current standard, which should include any amendments which may have been published since the standard was purchased.

Detailed information about joint Australian/New Zealand standards can be found by visiting the standards webshop in Australia at www.saiglobal.com or Standards New Zealand's website at www.standards.govt.nz.

For more frequent listings or notification of revisions, amendments, and withdrawals, Standards Australia and Standards New Zealand offer a number of update options. For information about these services, users should contact their respective national standards organisation.

We also welcome suggestions for improvement in our standards, and especially encourage readers to notify us immediately of any apparent inaccuracies or ambiguities. Please address your comments to either the Chief Executive of Standards Australia or the New Zealand Standards Executive at the address shown on the title page.

This standard was issued in draft form for comment as DR AS/NZS 4777.1:2016.

Copyright Standards New Zealand

auto login of Electrical Workers Licensing Group is licenced to temporarily download this document.
Electrical Workers Licensing Group may print this document but not more than 10% of the documents subscribed to may be held in printed form at any one time.

auto login of Electrical Workers Licensing Group is licenced to temporarily download this document.
Electrical Workers Licensing Group may print this document but not more than 10% of the documents subscribed to may be held in printed form at any one time.

Australian/New Zealand Standard

Grid connection of energy systems via inverters

Part 1: Installation requirements

Copyright Standards New Zealand

Originated in Australia as AS 4777.1—2002.
Previous edition 2005.
Third edition jointly revised and designated as AS/NZS 4777.1:2016.

COPYRIGHT

© Standards Australia Limited/Standards New Zealand

All rights are reserved. No part of this work may be reproduced or copied in any form or by any means, electronic or mechanical, including photocopying, without the written permission of the publisher, unless otherwise permitted under the Copyright Act 1968 (Australia) or the Copyright Act 1994 (New Zealand).

Jointly published by SAI Global Limited under licence from Standards Australia Limited, GPO Box 476, Sydney, NSW 2001 and by Standards New Zealand, PO Box 1473, Wellington 6140.

ISBN (Print) 978-1-77664-633-3
ISBN (PDF) 978-1-77664-634-0

auto login of Electrical Workers Licensing Group is licenced to temporarily download this document.
Electrical Workers Licensing Group may print this document but not more than 10% of the documents subscribed to may be held in printed form at any one time.

PREFACE

This Standard was prepared by the Joint Standards Australia/Standards New Zealand Committee EL-042, Renewable Energy Power Supply Systems and Equipment, and is based on requirements developed by a group of utility, photovoltaic, renewable energy, battery, inverter and industry experts. This Standard supersedes AS 4777.1—2005 six months after publication. During this period, either this edition or AS 4777.1—2005 may be utilized. After this period, it is anticipated that the 2005 edition will be withdrawn.

In addition, the provisions of Clause 3.4.8.3 for the soft limit of an export control function of an IES will apply 18 months after publication. These transitional periods are expected to be adopted by the relevant regulators.

Where a clause in this Standard refers to an inverter requirement of AS/NZS 4777.2, then either an inverter complying with AS/NZS 4777.2:2015 or an inverter complying with both AS 4777.2—2005 and AS 4777.3—2005 may be used during the transitional period for the application of AS/NZS 4777.2.

The objective of the Standard is to specify safety and installation requirements for inverter energy systems (IES) intended for the injection of electric power through an electrical installation to the grid. IES are distributed energy resources when connecting to the grid and need to ensure overall safe operation of the installation and interaction with the broader grid.

This Standard is part of a series, which consists of the following:

(a) AS/NZS 4777.1, *Grid connection of energy systems via inverters*, Part 1: *Installation requirements* (this Standard).

(b) AS/NZS 4777.2, *Grid connection of energy systems via inverters*, Part 2: *Inverter requirements.*

This Standard needs to be read in conjunction with the regulations, service and installation rules of the electricity distributor approving the connection.

This Standard is required to be read in accordance with the following:

(i) AS/NZS 3000 *Electrical installations (known as the Australian/New Zealand Wiring Rules).*

(ii) AS/NZS 5033 *Installation and safety requirements for photovoltaic (PV) arrays*, where applicable.

There has been extensive revision of this Standard to cater for changes in the industry. Both this Standard and AS/NZS 5033 now require inverters that comply with IEC 62109-2, *Safety of power converters for use in photovoltaic power systems*, Part 2: *Particular requirements for inverters*, for grid-connected PV systems.

There has also been significant innovation in the areas of multiple mode IES, voltage management and commencement of enabling a smart grid, which this revision accommodates.

This Standard has also been revised to accommodate some consideration of other energy sources where relevant standards may not be available. Until installation, wiring and safety concepts have been developed to cover these other energy source technologies, this Standard provides a limited range of provisions.

Statements expressed in mandatory terms in notes to figures are deemed to be requirements of this Standard.

Copyright Standards New Zealand

The term ‘informative’ has been used in this Standard to define the application of the appendix to which it applies. An ‘informative’ appendix is only for information and guidance.

Copyright Standards New Zealand

auto login of Electrical Workers Licensing Group is licenced to temporarily download this document.
Electrical Workers Licensing Group may print this document but not more than 10% of the documents subscribed to may be held in printed form at any one time.

auto login of Electrical Workers Licensing Group is licenced to temporarily download this document.
Electrical Workers Licensing Group may print this document but not more than 10% of the documents subscribed to may be held in printed form at any one time.

Copyright Standards New Zealand

CONTENTS

Page

SECTION 1 SCOPE AND GENERAL
1.1 SCOPE AND APPLICATION 6
1.2 NORMATIVE REFERENCES 6
1.3 DEFINITIONS 7

SECTION 2 GENERAL REQUIREMENTS
2.1 GENERAL 11
2.2 TYPICAL CONFIGURATIONS 11
2.3 GENERAL REQUIREMENTS FOR INVERTER ENERGY SYSTEMS (IES) 14

SECTION 3 CONNECTION OF THE IES TO THE ELECTRICAL INSTALLATION
3.1 GENERAL 15
3.2 CONNECTIONS 15
3.3 SELECTION AND INSTALLATION OF WIRING SYSTEMS 16
3.4 CONTROL AND PROTECTION 17

SECTION 4 CONNECTION OF INVERTER TO ENERGY SOURCE
4.1 GENERAL 24
4.2 CONNECTORS OR COUPLING CONNECTIONS 24
4.3 CABLING 25
4.4 OVERCURRENT PROTECTION 26
4.5 ISOLATION DEVICES 26

SECTION 5 ADDITIONAL REQUIREMENTS
5.1 EARTH FAULT DETECTION 28
5.2 SEGREGATION OF CIRCUITS 28
5.3 ADDITIONAL INSTALLATION REQUIREMENTS 28
5.4 ADDITIONAL REQUIREMENTS FOR MULTIPLE MODE IES 29
5.5 MULTIPLE INVERTER INSTALLATIONS 31

SECTION 6 SIGNS AND LABELS
6.1 GENERAL 36
6.2 SIGNS FOR THE SWITCHBOARD TO WHICH THE IES IS DIRECTLY CONNECTED 37
6.3 SIGNS FOR OTHER SWITCHBOARDS 37
6.4 SIGNS FOR INVERTER LOCATIONS 37
6.5 ENERGY SOURCE LABELLING 37
6.6 DEMAND RESPONSE MODE (DRM) LABELLING 38
6.7 SIGNS FOR SHUTDOWN PROCEDURE 38
6.8 SIGNS LOCATED ADJACENT TO INVERTER(S) 38
6.9 SIGNS FOR MULTIPLE SYSTEMS 38
6.10 SIGNS FOR MULTIPLE ENERGY SOURCES 38
6.11 SIGNS FOR MULTIPLE MODE IES (INCLUDING SYSTEMS WITH STAND-ALONE FUNCTIONALITY) 38
6.12 SIGNS FOR EMERGENCY SERVICES 39

SECTION 7 SYSTEM DOCUMENTATION AND COMMISSIONING
7.1 GENERAL 40
7.2 MANUAL 40
7.3 VERIFICATION 41

Page

7.4 VISUAL INSPECTION 42
7.5 TESTING 42
7.6 COMMISSIONING 42

APPENDICES
A EXAMPLE SIGNS 44
B DESIGN NOTES—MULTIPLE MODE INVERTER ENERGY SYSTEM WITH STAND-ALONE PORT AND ALTERNATE SUPPLY STAND-ALONE DISTRIBUTION SWITCHBOARD 52
C DESIGN CONSIDERATIONS 53
D ADDITIONAL RECOMMENDATIONS FOR PERIODIC VERIFICATION AND MAINTENANCE 66
E EARTHING CONSIDERATION 67
F INFORMATION ON ELECTRICITY DISTRIBUTOR REQUIREMENTS 68

BIBLIOGRAPHY 70

Copyright Standards New Zealand

auto login of Electrical Workers Licensing Group is licenced to temporarily download this document.
Electrical Workers Licensing Group may print this document but not more than 10% of the documents subscribed to may be held in printed form at any one time.

STANDARDS AUSTRALIA/STANDARDS NEW ZEALAND

Australian/New Zealand Standard
Grid connection of energy systems via inverters

Part 1: Installation requirements

SECTION 1 SCOPE AND GENERAL

1.1 SCOPE AND APPLICATION

1.1.1 Scope

This Standard specifies the electrical and general safety installation requirements for inverter energy systems (IES) up to or equal to 200 kVA for the injection of electric power to an electrical installation connected to the grid at low voltage.

NOTES:

1 Larger systems connected to a low voltage grid with local load may follow the same general guidelines.

2 This Standard may be used for low voltage installation of systems which may be connected to the grid at high voltage.

3 This Standard does not contain detailed installation requirements for the energy source(s) and its associated wiring.

1.1.2 Application

This Standard shall be used in conjunction with AS/NZS 3000.

This Standard needs to be used in conjunction with the connection and technical requirements of the appropriate electricity distributor and local electricity legislation.

NOTES:

1 Refer to Appendix F for further information on electricity distributor requirements.

2 In some locations there may be further limitations due to the characteristics of the electricity distributor's grid at the point of connection.

1.2 NORMATIVE REFERENCES

The following are the normative documents referenced in this Standard:

AS

3011 Electrical installations—Secondary batteries installed in buildings (series)
3011.1 Part 1: Vented cells
3011.2 Part 2: Sealed cells

4086 Secondary batteries for use with stand-alone systems
4086.2 Part 2: Installation and maintenance

60038 Standard voltages

62040 Uninterruptible power systems (UPS)
62040.1.1 Part: 1.1 General and safety requirements for UPS used in operator access areas

Copyright Standards New Zealand

auto login of Electrical Workers Licensing Group is licenced to temporarily download this document.
Electrical Workers Licensing Group may print this document but not more than 10% of the documents subscribed to may be held in printed form at any one time.

AS/NZS	
2053	Conduits and fittings for electrical installations
2053.1	Part 1: General requirements
3000	Electrical installations (known as the Australian/New Zealand Wiring Rules)
3008	Electrical installations—Selection of cables (series)
3008.1.1	Part 1.1: Cables for alternating voltages up to and including 0.6/1 kV—Typical Australian installation conditions
3008.1.2	Part 1.2: Cables for alternating voltages up to and including 0.6/1 kV—Typical New Zealand conditions
3019	Electrical installations—Periodic verification
3112	Approval and test specification—Plugs and socket-outlets
4777	Grid connection of energy systems via inverters
4777.2	Part 2: Inverter requirements
5033	Installation and safety requirements for photovoltaic (PV) arrays
60320	Appliance couplers for household and similar general purposes
60320.1	Part 1: General requirements (IEC 60320-1, Ed. 2.1 (2007) MOD)
61386	Conduit systems for cable management
61386-1	Part 1: General requirements
NZS	
4219	Seismic performance of engineering systems in buildings
IEC	
60038	IEC standard voltages
60309	Plugs, socket-outlets and couplers for industrial purposes
60309-1	Part 1: General requirements
62109	Safety of power converters for use in photovoltaic power systems
62109-2	Part 2: Particular requirements for inverters
62423	Type F and type B residual current operated circuit-breakers with and without integral overcurrent protection for household and similar uses

1.3 DEFINITIONS

For the purposes of this Standard, the following definitions and those of AS/NZS 3000 and AS/NZS 4777.2 apply.

1.3.1 Active (or active conductor)

Any conductor that is maintained at a difference of potential from the neutral or earthed conductor.

1.3.2 Adjacent

Within three meters, with each item fully visible from the both locations.

1.3.3 Automatic disconnection device

A device complying with the automatic disconnection requirements of AS/NZS 4777.2.

1.3.4 Demand response

The automated alteration of an electrical product's normal mode of operation in response to an initiating signal originating from or defined by a remote agent.

auto login of Electrical Workers Licensing Group is licenced to temporarily download this document.
Electrical Workers Licensing Group may print this document but not more than 10% of the documents subscribed to may be held in printed form at any one time.

Copyright Standards New Zealand

1.3.5 Demand response enabling device (DRED)

A device, integral or external to an electrical product, which provides the functionalities and capabilities to achieve demand response.

NOTE: The DRED functionality and capabilities are referred to in the AS 4755 series.

1.3.6 Distribution switchboard

A switchboard other than a main switchboard.

1.3.7 Domestic dwelling

A building of Class 1, Class 2 or Class 10 as specified in the National Construction Code.

NOTE: Based on AS/NZS 5033:2014, Clause 1.4.14.

1.3.8 Electrical installation

Electrical equipment installed for the purposes of conveyance, control, measurement or use of electricity, where electricity is or is to be supplied for consumption.

1.3.9 Electricity distributor

Any person or organization that provides electricity from an electricity distribution system to one or more electrical installations.

NOTE: Includes the distributor, supply authority, network operator, network service provider, and electricity retailer or electricity entity, as may be appropriate in the relevant jurisdiction.

1.3.10 Energy source

Voltage or current source requiring conversion from one kind of electrical power to another kind suitable for connection to the grid.

NOTE: Examples include wind turbine, hydro turbine, battery energy storage, fuel cell or solar photovoltaic.

1.3.11 Export limit

Limit on the export of electricity to the grid from an inverter energy system.

1.3.12 Grid

The portion of the electrical distribution system that is operated by an electricity distributor.

1.3.13 Installation wiring

A system of wiring in which cables are fixed or supported in position in accordance with the appropriate requirements of AS/NZS 3000.

1.3.14 Intermediate distribution switchboard

Any distribution switchboard electrically connected between the main switchboard and a distribution switchboard to which an inverter energy system is directly connected.

1.3.15 Inverter

A device that uses semiconductor devices to transfer power between a d.c. source(s) or load and an a.c. source(s) or load.

NOTE: For the purposes of this Standard, a.c. to a.c. convertors transferring power between non-grid energy sources and an a.c. source or load that uses semiconductor devices are considered to be inverters.

1.3.16 Inverter energy system (IES)

A system comprising one or more inverters together with one or more energy sources (which may include batteries for energy storage) and controls, where the inverter(s) satisfies the requirements of AS/NZS 4777.2.

Electrical Workers Licensing Group is licenced to temporarily download this document.
auto login of Electrical Workers Licensing Group may print this document but not more than 10% of the documents subscribed to may be held in printed form at any one time.

Copyright Standards New Zealand

1.3.17 Islanding

Any situation where the electricity supply from a grid is disrupted or fails and one or more inverters or generators maintains any form of electricity supply, be it stable or not, to any section of that grid or within the electrical installation.

NOTE: Prevention of the injection of energy and prevention of an unintentional island with the grid or part thereof when supply is disrupted is key to maintaining safety on the grid and within electrical installations.

1.3.18 Main switchboard

A switchboard from which the supply to the whole electrical installation can be controlled.

1.3.19 Multiple mode inverter (MMI)

An inverter that operates in more than one mode, for example, having grid-interactive functionality when grid voltage is present, and stand-alone functionality when the grid is de-energized or disconnected.

NOTES:

1 Inverters with battery storage ports are considered multiple mode inverters.

2 As defined in IEC 62109-2, Clause 3.107.

1.3.20 Photovoltaic (PV) array

Assembly of electrically interconnected (PV) modules, PV strings or PV sub-arrays comprising all components up to the d.c. PV port of the inverter or other power conversion equipment or d.c. loads.

NOTE: Does not include the PV array foundation, tracking apparatus, thermal control and other such components.

1.3.21 Pluggable equipment type B

Equipment that is intended for connection to the installation wiring via an industrial plug and socket-outlet or an appliance coupler, or both, complying with IEC 60309-1.

NOTE: For the purposes of this Standard, appliance couplers and connectors within the scope of IEC 60320 or AS/NZS 60320-1 are not equivalent connectors to IEC 60309-1.

1.3.22 Point of supply

The junction of the consumer mains with conductors of a grid.

NOTES:

1 Excludes the supply from the inverter energy system as these systems will disconnect when the electricity supply from a grid is disrupted or fails.

2 For the purposes of this Standard, this definition applies in place of that in AS/NZS 3000.

1.3.23 Port

Location giving access to a device where electromagnetic energy or signals may be supplied or received or where the device variables may be observed or measured.

NOTE: As defined in IEC 62109-1, Clause 3.64.

1.3.24 Rated

Value assigned, generally by a manufacturer, to a specified operating condition of an inverter, device or component.

NOTE: As defined in IEV 151-04-03.

1.3.25 Rated apparent power

The output apparent power of the inverter, which is a product of the rated current and rated voltage.

NOTE: The SI unit is the volt ampere (VA). Typically inverters are rated in kilovolt amperes (kVA).

COPYRIGHT

Copyright Standards New Zealand

auto login of Electrical Workers Licensing Group is licenced to temporarily download this document.
Electrical Workers Licensing Group may print this document but not more than 10% of the documents subscribed to may be held in printed form at any one time.

1.3.26 Rated current

The grid-interactive port output current of the inverter or IES that can be supplied continuously for seven hours at the rated voltage when the input power to the inverter or IES does not exceed the maximum input limits.

NOTE: For an individual inverter, the maximum continuous current of IEC 62109-1, which is marked on the inverter, can be considered equivalent to the rated current.

1.3.27 Readily available

Capable of being reached for inspection, maintenance or repairs without necessitating the dismantling of structural parts, cupboards, benches and the like.

1.3.28 Residual current device (RCD)

A device intended to isolate supply to protected circuits, socket-outlets or electrical equipment in the event of a current flow to earth that exceeds a predetermined value.

NOTE: The various types of RCDs available are described in AS/NZS 3000.

1.3.29 Restricted access

Access restricted—

(a) by a barrier, e.g. by a perimeter fence with access only via a padlocked or equivalently secured gate or door; or

(b) by location, e.g. a commercial roof where there is no fixed ladder or other ready means of access.

1.3.30 Service life of IES

The expected life of the system or the acceptable period of use in service.

1.3.31 Shall

Indicates that a statement is mandatory.

1.3.32 Should

Indicates a recommendation.

1.3.33 Single-phase

Connections between the active of a phase and the neutral.

1.3.34 Stand-alone functionality

An inverter function intended to supply a.c. power to a load that is not connected to the grid.

NOTE: Based on IEC 62109-2, Clause 3.109.

1.3.35 Three-phase

Systems either connected to all phases and neutral (i.e. star connected) or connected between phases (i.e. delta connected).

1.3.36 Utilization voltage

The phase-to-phase or phase-to-neutral voltage at the outlets or at the terminals of equipment.

1.3.37 Voltage unbalance

Phenomenon due to the differences between voltage deviations on the various phases, at a point of a polyphase system, resulting from differences between the phase currents or geometrical asymmetry in the line.

NOTE: As defined in IEV 604-01-29.

Copyright Standards New Zealand

auto login of Electrical Workers Licensing Group is licenced to temporarily download this document.
Electrical Workers Licensing Group may print this document but not more than 10% of the documents subscribed to may be held in printed form at any one time.

SECTION 2 GENERAL REQUIREMENTS

2.1 GENERAL

The installation shall comply with the following:

(a) The requirements of AS/NZS 3000 except as varied herein.

(b) The additional requirements of this Standard.

(c) The inverter shall comply with the requirements of AS/NZS 4777.2.

(d) Where a PV array is used as an energy source, the installation of the array shall comply with AS/NZS 5033.

(e) Where lead acid batteries and/or nickel cadmium batteries are installed for energy storage, their installation shall comply with AS 4086.2 or the AS 3011 series.

(f) Where other energy storage technologies and sources are used, the installation shall be in accordance with manufacturer's instructions.

NOTES:

1 The installation needs to comply with safety and electricity legislation in the relevant state or territory in Australia or New Zealand.

2 Where energy sources and storage technologies other than PV arrays and lead acid batteries and/or nickel cadmium batteries are used, they should follow appropriate standards for the technology.

All electrical work shall be undertaken by appropriately licensed persons.

2.2 TYPICAL CONFIGURATIONS

Some typical installation configurations are shown in Figures 1 and 2. These typical configurations are shown for guidance only: other configurations may be acceptable.

Copyright Standards New Zealand

auto login of Electrical Workers Licensing Group is licenced to temporarily download this document.
Electrical Workers Licensing Group may print this document but not more than 10% of the documents subscribed to may be held in printed form at any one time.

auto login of Electrical Workers Licensing Group is licenced to temporarily download this document.
Electrical Workers Licensing Group may print this document but not more than 10% of the documents subscribed to may be held in printed form at any one time.

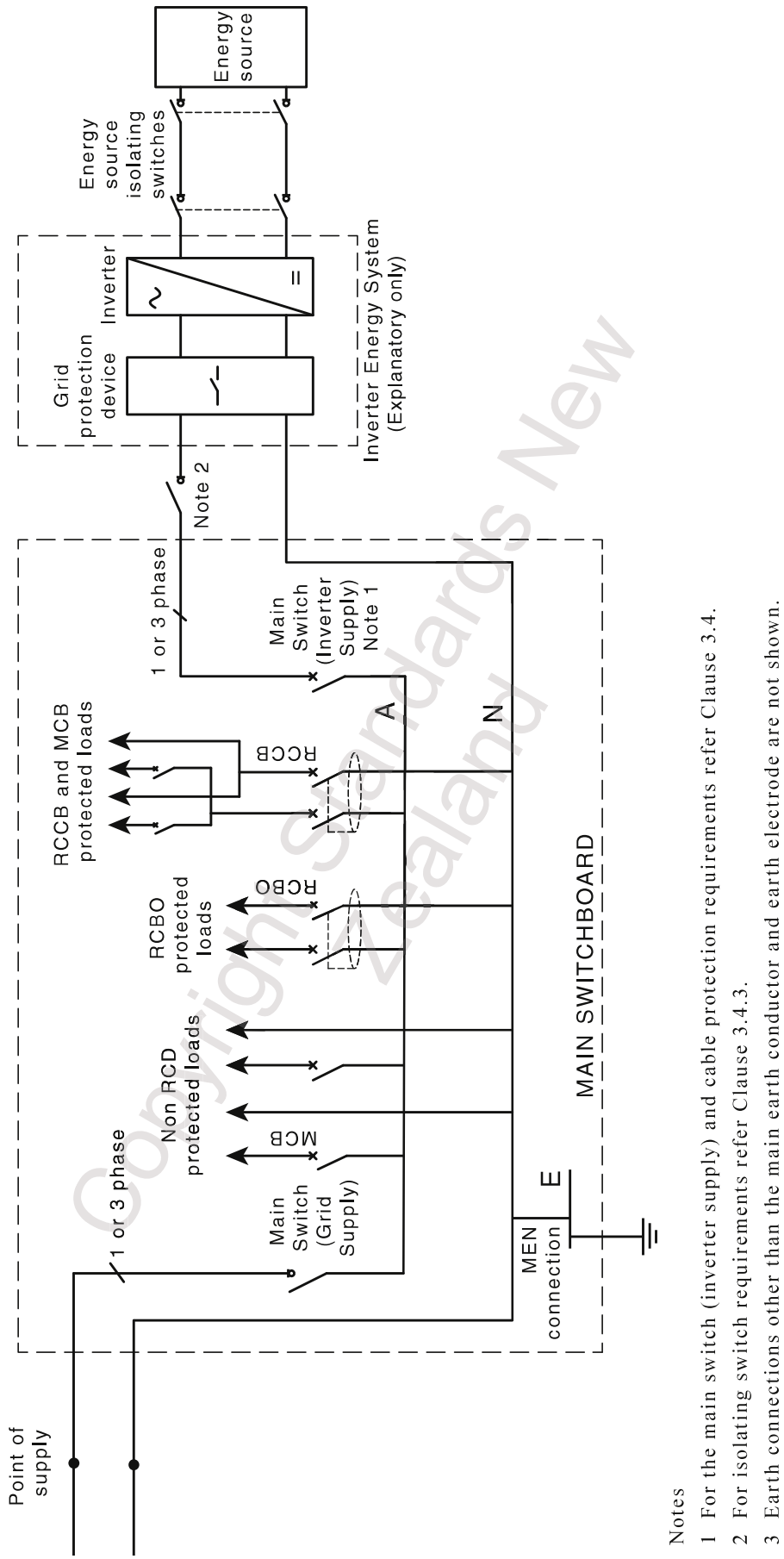

Notes

1 For the main switch (inverter supply) and cable protection requirements refer Clause 3.4.

2 For isolating switch requirements refer Clause 3.4.3.

3 Earth connections other than the main earth conductor and earth electrode are not shown.

FIGURE 1 TYPICAL INSTALLATION OF AN INVERTER ENERGY SYSTEM TO A MAIN SWITCHBOARD

Copyright Standards New Zealand

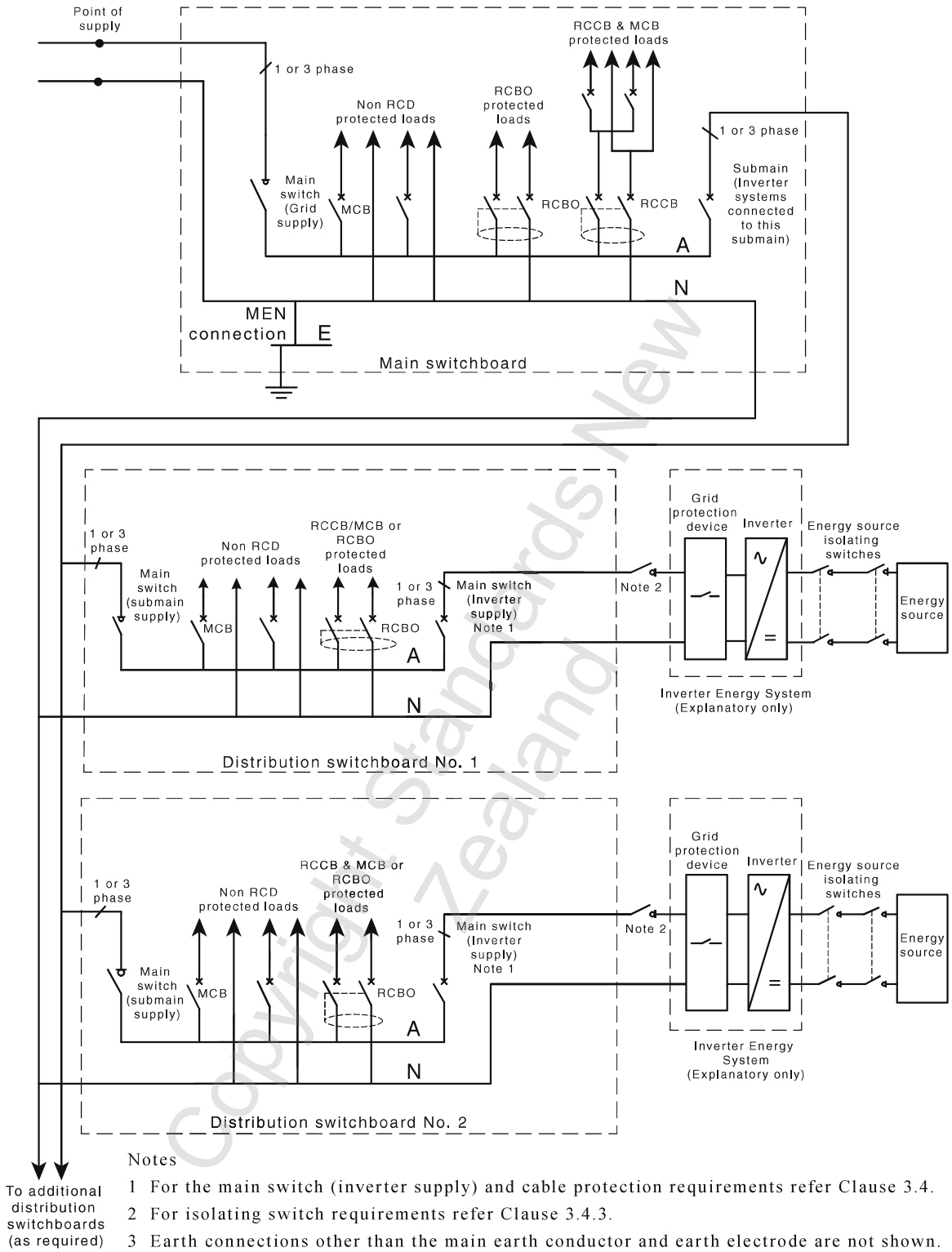

Notes

1 For the main switch (inverter supply) and cable protection requirements refer Clause 3.4.

2 For isolating switch requirements refer Clause 3.4.3.

3 Earth connections other than the main earth conductor and earth electrode are not shown.

FIGURE 2 TYPICAL INSTALLATION OF INVERTER ENERGY SYSTEMS TO DISTRIBUTION SWITCHBOARDS

Copyright Standards New Zealand

auto login of Electrical Workers Licensing Group is licenced to temporarily download this document.
Electrical Workers Licensing Group may print this document but not more than 10% of the documents subscribed to may be held in printed form at any one time.

2.3 GENERAL REQUIREMENTS FOR INVERTER ENERGY SYSTEMS (IES)

An IES installation is made up of an inverter(s), an energy source(s), wiring, and control, monitoring and protection devices connected at a single point in an electrical installation. Multiple IES installations can exist within a single electrical installation.

Unless specifically stated by the electricity distributor, the rating limit for a single-phase IES in an individual installation shall be equal to 5 kVA, and a multi-phase IES shall have a balanced output with respect to its rating with a tolerance of no greater than 5 kVA unbalance between any phases.

Installations in domestic dwellings shall not have maximum d.c. voltages that span greater than 600 V. For non-domestic installations where the maximum d.c. voltages exceed 600 V, the entire d.c. installation and associated wiring and protection shall have restricted access. For non-domestic installations, at the inverter where the d.c. voltage exceeds 600 V d.c., restricted access is satisfied where the cabling is in heavy duty conduit or is fully enclosed in an equivalent electrical enclosure that is not accessible without the use of a tool up to and including the inverter d.c. port. If in accessible areas, the associated protection and isolation devices shall also be fully enclosed and only accessible with the use of a tool.

The size, balancing of current output (for multi-phase installations) and voltage rise should be considered in the design of IES.

NOTE: See Appendix C for design considerations.

The inverter(s) shall comply with the requirements of AS/NZS 4777.2 to ensure safe operation when connected to any consumer installation supplied from a grid. Additional protective functions, earth fault and overcurrent protection shall be in accordance with the requirements of this Standard.

The IES shall be installed in accordance with the requirements of this Standard, and those of the IES component manufacturers. Where there is a conflict, this Standard shall prevail.

NOTE: The attention of system designers and installers is drawn to the requirements detailed in the manual provided with the inverter relating to the installation of external RCDs and other devices externally mounted as required by AS/NZS 4777.2 or IEC 62109-1 and IEC 62109-2. Externally mounted RCDs, earth leakage detection devices and/or interruption devices may be required. Demand response enabling devices for inverter control may be available for connection. Inverter manufacturers may also have specific connection requirements related to inverter topology, such as non-separated supplies.

Where the IES does not provide a metered output and the revenue metering of the electricity distributor does not provide direct IES output metering, an energy (kilowatt hour) meter or other logging device to record the output of the IES should be installed.

Copyright Standards New Zealand

auto login of Electrical Workers Licensing Group is licenced to temporarily download this document.
Electrical Workers Licensing Group may print this document but not more than 10% of the documents subscribed to may be held in printed form at any one time.

SECTION 3 CONNECTION OF THE IES TO THE ELECTRICAL INSTALLATION

3.1 GENERAL

The control, protection and wiring system equipment and installation shall be fit for purpose for the conditions to which they are likely to be exposed within the electrical installation.

The IES equipment, switchgear and wiring shall be selected and installed to provide the following:

(a) Control and isolation of the electrical installation, and the IES as required for operation, maintenance, testing and fault detection or repair.

(b) Automatic disconnection of supply or IES output in the event of an overload, short circuit or excessive earth leakage current in the protected part of the electrical installation.

(c) Switchgear and control gear grouped and/or interconnected together on switchboards or in inverter control system components, enclosed against external influences.

(d) Additional grid interface devices as required for overall IES operation.

NOTE: See Clauses 3.4.4 (phase balancing, central protection, etc.), 3.4.6 (demand response mode) and 3.4.8 (export control).

(e) Electrical connection between the electrical installation and the IES.

3.2 CONNECTIONS

3.2.1 General

The IES shall be connected by either fixed installation wiring, or by a connector or coupling arrangement using flexible cord, to a dedicated circuit on a switchboard. Connector or coupling use shall be in accordance with Clause 3.2.3.

Auxiliary equipment for use with the IES may be connected to the main switch (inverter supply). Where a socket-outlet is used, it shall only be accessed by use of key or a tool and for exclusive use with IES auxiliary equipment.

3.2.2 Connection to switchboard

The IES should be connected directly to the main switchboard. In installations where this is not possible, the IES should be connected to the distribution switchboard located physically nearest to the inverter. The main switchboard, the distribution switchboard to which the IES is connected and all intermediate distribution switchboards (if any) shall be labelled in accordance with Section 6.

NOTE: When selecting the distribution board for the IES connection, minimizing the cable run and voltage rise to the point of connection is important (see Clause 3.3.3 and AS/NZS 3000).

Where an a.c. generating set is installed for purposes of an alternative supply system, an IES shall be connected to the grid side of any generator changeover device in the electrical installation, except when the a.c. generating set operating as the alternative supply and the IES are appropriately designed to operate in parallel or where the IES has an interlock with the changeover device to disconnect the IES when the generator is operating.

NOTE: A generating set cannot absorb energy from an IES.

Electrical Workers Licensing Group is licenced to temporarily download this document.
auto login of Electrical Workers Licensing Group may print this document but not more than 10% of the documents subscribed to may be held in printed form at any one time.

Copyright Standards New Zealand

3.2.3 Connector or coupling connections to the IES

Where connection to the inverter is by a flexible cable and connector or coupling device, the cable shall be secured in such a way as to prevent inadvertent disconnection or mechanical stresses on electrical connections. In any such instance, no greater than 300 mm of flexible cable shall be unsupported, with cables managed in such a way as to present no potential for being inadvertently placed under mechanical strain. The flexible cable shall be provided with strain relief by a cable gland or clamping mechanism at each end of the flexible cable.

The flexible cable shall be chosen to be appropriate for the connector or coupling device to which it will be attached.

Where inverters have connectors or couplers for their port connections, only pluggable equipment type B shall be used. The inverter connector type shall not be modified. Only connectors and couplers of the make, type and model specified by the equipment manufacturer shall be used. Any connector or coupling device used shall ensure that there are no accessible live parts under any conditions.

Plug and socket connections (as defined in AS/NZS 3112 and AS/NZS 60320.1) or pins for direct insertion into a socket-outlet shall not be used.

NOTE: The plug and socket connections defined in AS/NZS 3112 and AS/NZS 60320.1 are typical three and two pin plugs and socket connections for typical electrical installations and equipment.

3.3 SELECTION AND INSTALLATION OF WIRING SYSTEMS

3.3.1 General

All cables shall be installed and sized in accordance with AS/NZS 3000, the AS/NZS 3008.1.1 series and the requirements of this Standard.

All the cables between the IES and any switchboard and all the cables between any distribution switchboards and the main switchboard that carry current from the IES shall have a current-carrying capacity of at least the rated current of the IES. Where the IES is configured as a multiple mode inverter, the cable current-carrying capacity shall be sized to suit the larger of the generating output and the load input rated current of the IES.

3.3.2 Installation method

Cables shall be supported so they do not suffer fatigue due to wind/snow effects.

Cables shall not lie on roofs or floors without an enclosure or conduit. Cable enclosures and conduits on roofs or floors shall not obstruct the natural water drain paths or promote accumulation of debris.

Particular attention shall be given to the mechanical protection requirements specified in AS/NZS 3000 to maintain the integrity of the cable insulation and conductors.

Cables shall be protected from abrasion, tension, compression and cutting forces that may arise from thermal cycles, wind and other forces during installation and throughout the service life of the IES.

All conduit and ducting exposed to sunlight shall be of a UV resistant type (refer to AS/NZS 2053.1 or AS/NZS 61386.1).

The method of cable support and fixing shall have a lifetime greater than or equal to the service life of the IES.

NOTES:

1 Typically plastic cable ties exposed to UV will degrade within 2 to 5 years.

2 Conduits able to be used in direct sunlight are marked with the letter ‘T’.

COPYRIGHT

Copyright Standards New Zealand

auto login of Electrical Workers Licensing Group is licenced to temporarily download this document.
Electrical Workers Licensing Group may print this document but not more than 10% of the documents subscribed to may be held in printed form at any one time.

3.3.3 Voltage rise

The voltage rise requirements of this Clause (3.3.3) apply in addition to the voltage drop requirements of AS/NZS 3000. Under normal service conditions, the voltage at the terminals of any power consuming electrical equipment shall not be greater than the higher limit specified in the relevant electrical equipment Standard. Where the electrical equipment concerned is not covered by a Standard, the voltage at the terminals shall be such as not to impair the safe functioning of the electrical equipment.

All existing and new cabling shall be designed and checked for the maximum voltage rise between the electricity distributor's point of supply and the inverter a.c. terminals (grid-interactive port) in accordance with the following requirements. The overall voltage rise from the point of supply to the inverter a.c. terminals (grid-interactive port) shall not exceed 2% of the nominal voltage at the point of supply. The value of the current used for the calculation of voltage rise shall be the rated current of the IES. All IES within the electrical installation shall be considered.

NOTE: Refer to Appendix C for examples.

In the case of a group of inverters with a rating of no more than 5 kVA per phase (see Clause 5.5.2), calculations shall be based on the location where the interconnecting cable connects into the fixed installation wiring.

NOTE: For an aggregate IES rating larger than 30 kVA, the minimum load of the site can be taken into account in calculation of voltage rise at point of supply. For example, the known minimum load from a 12 month period for the entire site, or a factor of 0.7 of the constant minimum load may be used.

3.4 CONTROL AND PROTECTION

3.4.1 General

A main switch (inverter supply) shall be provided on the switchboard to which the IES is directly connected. An isolation switch or circuit breaker with the characteristics in Clause 3.4.3 may be used.

The labelling of all main switches shall be in accordance with Section 6.

The current rating of an IES comprised of a single inverter shall be the rated current of the inverter. Where the IES is comprised of multiple inverters, the IES current rating shall be the summation of the rated currents of all the inverters of that IES. The main switch (inverter supply) shall be sized to suit the total IES rated current for those IES connected to it.

3.4.2 Overcurrent protection

All IES cabling shall be protected against overcurrent in accordance with AS/NZS 3000. Where overcurrent protection for the cabling to the IES is not provided by other overcurrent protection, the main switch (inverter supply) shall be a circuit-breaker with rating suitable to protect all cabling up to the IES.

NOTE: Overcurrent protection of the cable needs to take into account fault currents that may be sourced from either the main supply or the IES output.

3.4.3 Isolation switches

An isolation switch or circuit-breaker shall—

(a) be provided on the switchboard to which the IES is directly connected (see Note 1);

(b) be able to be secured in the open position;

(c) operate in all active conductors;

(d) be capable of breaking the rated current of the IES;

COPYRIGHT

Copyright Standards New Zealand

auto login of Electrical Workers Licensing Group is licenced to temporarily download this document.
Electrical Workers Licensing Group may print this document but not more than 10% of the documents subscribed to may be held in printed form at any one time.

(e) isolate the IES from that switchboard;

(f) be installed in accordance with the requirements for main switches, as specified in AS/NZS 3000 (see Note 2); and

(g) be labelled as specified in Section 6.

NOTES:

1 The purpose of this switch is to provide isolation of the IES for persons working on other parts of the electrical installation.

2 The electrical requirements for isolation devices specified in AS/NZS 3000 include the prohibition on the use of solid state devices for isolation purposes.

Where both an isolator and circuit overcurrent protection are required, this may be two separate devices or a single circuit breaker capable of being secured in the open position.

Where the inverter is not adjacent to the switchboard to which it is connected, there shall be a labelled isolating switch adjacent to the inverter in addition to the main switch (inverter supply) installed in the switchboard. This isolating switch adjacent to the inverter shall be readily available. Isolation switches shall be capable of being secured in the open position. For an IES comprised of a single inverter or group of inverters with capacity of no more than 5 kVA per phase, see Clause 5.5.2.

The isolating device shall not be located within the operational portion of the inverter, so that if the inverter needs to be removed from service, the isolation device remains in place.

This requirement does not apply where—

(i) the serviceable section is interlocked with the isolating device;

(ii) all live parts are inside enclosures or behind barriers that provide a degree of protection of at least IPXXB or IP2X (i.e. all live parts are screened from touch); or

(iii) all live parts are isolated automatically.

3.4.4 Requirements for central protection and inverter integrated protection

3.4.4.1 *General*

Central protection shall be installed to perform the following functions—

(a) coordinate multiple IES installations at the one site;

(b) provide protection for the entire IES installation;

(c) provide islanding protection to the connected grid; and

(d) preserve safety of grid personnel and the general public.

Any central protection shall be placed as close to the main switch (grid supply) of the installation as practicable. This protection is in addition to and separate from the inverter protection.

The requirement for central protection shall be determined based on the rating of all IES connected at an installation. The types of protection functions specified in Table 1 shall be installed based on the rating of all IES connected at an installation.

NOTE: There may be the need to install an additional control for the main switch (inverter supply) to meet central protection requirements.

Central protection settings shall be secured against inadvertent or unauthorized tampering. Changes to settings shall require the use of a tool and special instructions not provided to unauthorized personnel.

NOTE: Special interface devices and passwords are regarded as tools.

Electrical Workers Licensing Group is licenced to temporarily download this document.
auto login of Electrical Workers Licensing Group may print this document but not more than 10% of the documents subscribed to may be held in printed form at any one time.

Copyright Standards New Zealand

auto login of Electrical Workers Licensing Group is licenced to temporarily download this document.
Electrical Workers Licensing Group may print this document but not more than 10% of the documents subscribed to may be held in printed form at any one time.

TABLE 1

REQUIREMENTS FOR INVERTER INTEGRATED PROTECTION AND CENTRAL PROTECTION FUNCTIONS

	IES ≤ 5 kVA/phase	15 kVA < IES ≤ 30 kVA	30 kVA < IES ≤ 200 kVA
Connection type	Single-phase, two-phase or three-phase	Three-phase	Three-phase
Protection required for all systems	Inverter integrated protection according to AS/NZS 4777.2	Inverter integrated protection according to AS/NZS 4777.2	Inverter integrated protection according to AS/NZS 4777.2
Additional central protection	None	Phase balance protection (refer to Clause 3.4.4.2) where not inverter integrated according to AS/NZS 4777.2	Phase balance protection (refer to Clause 3.4.4.2) where not inverter integrated according to AS/NZS 4777.2 AND Under and over voltage protection and under and over frequency protection (Refer to Clause 3.4.4.3)

3.4.4.2 *Phase balance protection*

Where phase balance protection is required as per Table 1, it shall respond to current imbalance at the IES connection point caused by an IES (or multiple IES) between phases greater than 21.7A (5 kVA at 230 V) by disconnecting all IES from the installation by automatic operation of a disconnection device located adjacent to the main switch (Inverter supply) or adjacent to the inverters and/or the internal inverter disconnection device by asserting DRM 0 to the inverter. The disconnection device shall operate when there is loss of power to the central protection, loss of control signal from the central protection or an internal fault in the central protection (this is to enable fail-safe operation). A semiconductor (solid state) device shall not be used for this purpose. Phase balance protection shall operate within 30 seconds.

3.4.4.3 *Central voltage and frequency protection requirements*

In addition to inverter integrated protection, voltage and frequency protection is required for IES larger than 30 kVA as specified in Table 1. The additional protection provides a level of coordination between the point of supply, individual inverters and equipment within a consumer installation.

NOTES:

1 The utilization voltage for all equipment needs to be maintained within an acceptable range at all times. Increases in the utilization voltage may be caused by the supply voltage or by internal voltage rises caused by the IES, whereas the utilization voltage falling below the minimum may be caused by grid supply voltage reduction or excessive loads on site.

2 The additional protection also provides additional anti-islanding protection.

The central voltage and frequency protection shall have the setting parameters specified in Table 2. It should have the default set points nominated in Table 2.

The disconnection time in Table 2 shall be co-ordinated with the inverter protection requirements of AS/NZS 4777.2.

COPYRIGHT

TABLE 2

CENTRAL VOLTAGE AND FREQUENCY PROTECTION SET POINTS

Setting parameter	Disconnection time	In Australia only	In New Zealand only
Sustained over voltage (V>) (based on average value over a period of 10 min)	15 seconds	255 V	246 V
Over voltage (V>)	2 seconds	260 V	250 V
Under voltage (V<)	2 seconds	180 V	180 V
Over frequency (F>)	2 seconds	52 Hz	52 Hz
Under frequency (F<)	2 seconds	47 Hz	45 Hz

These set points shall be fixed set points or adjustable set points secured against adjustment.

The central protection shall respond to the above setting parameter conditions by disconnecting all IES from the installation by automatic operation of a disconnection device located adjacent to the main switch (inverter supply) or adjacent to the inverter and/or the internal inverter disconnection device by asserting DRM 0 to the inverter. The disconnection device shall operate when there is loss of power to the central protection, loss of control signal from the central protection or an internal fault in the central protection (this is to enable fail-safe operation). A semiconductor (solid state) device shall not be used for this purpose.

NOTES:

1 The additional disconnection device for automated operation of central protection does not negate the need for the main switch (inverter supply).

2 These are limits based on the overall system configuration—application for individual inverters may require different set points designed to suit overall central protection requirements.

3.4.4.4 *Connection and reconnection procedure*

Only after all of the following conditions have been met shall the IES be enabled to connect or reconnect to the grid:

(a) The voltage of the grid has been maintained within the limits of AS 60038 (for Australia) or IEC 60038 (for New Zealand) for at least 60 s.

(b) The frequency of the grid has been maintained within the range 47.5 Hz to 50.15 Hz for at least 60 s.

(c) The IES and the grid are synchronized and in-phase with each other.

(d) No external disconnect signal is present or DRM 0 asserted requiring the system to be disconnected.

NOTE: Voltages for reconnection in Australia may be in the range of 205 V to 255 V and in New Zealand 198 V and 246 V.

3.4.5 Residual current devices (RCDs)

An RCD dedicated for an IES may be used to meet the mechanical cable protection requirements and isolation requirements of AS/NZS 3000 for the cable from the switchboard to the IES.

Copyright Standards New Zealand

auto login of Electrical Workers Licensing Group is licenced to temporarily download this document.
Electrical Workers Licensing Group may print this document but not more than 10% of the documents subscribed to may be held in printed form at any one time.

If an RCD is used, the RCD shall—

(a) disconnect all live conductors (including the actives and neutral); and

(b) be of the type specified in the inverter manufacturer's instructions or as labelled on the inverter.

NOTES:

1 If the IES is a multiple mode IES with stand-alone functionality, then the requirements of Clause 5.4 apply.

2 Where manufacturers specify RCDs for earth fault protection and the protection required is greater than 30 mA, alternatives for mechanical protection are required. Manufacturers' instructions cannot be used to override the 30 mA requirement for RCDs in AS/NZS 3000.

In New Zealand, all RCD protection shall be at least Type A and shall operate in all live conductors (including the neutral).

3.4.6 Demand response mode (DRM)

The demand response enabling device (DRED), where provided, shall be connected to the DRM port of the inverter or as per the manufacturer's specifications. The connection to the DRED shall be via the provided terminal block or RJ45 socket labelled as the DRM port. DRED communication is via extra-low voltage (ELV) and as such cabling shall be suitably protected and segregated from other cables.

NOTE: Any additional enabling requirements for the DRED from the electricity distribution authority need to be met.

3.4.7 IES operational settings

The IES protection settings need to meet the requirements of the electricity distributor.

The inverter protection settings shall be as specified in AS/NZS 4777.2 for anti-islanding protection and sustained operation limits.

The electrical distributor may require changes to be made to the power quality response modes and sustained operational limits (voltage and/or frequency).

NOTE: Any changes to these set points need to be approved by the electrical distributor through formal agreement or as required in applicable regulations or legislation.

The internal settings of the operational and control modes of the inverter shall only be adjusted within the allowable limits set out in AS/NZS 4777.2.

Additional requirements from the electricity distributor may include the activation or connection of—

(a) DRMs connected to a DRED;

(b) voltage response modes;

(c) fixed power factor or reactive power modes;

(d) power response mode; and

(e) power rate limit.

These changes shall be recorded in the system manual.

3.4.8 Export control of an IES

3.4.8.1 *General*

The export control for an IES is used to control the generation from an IES and amount of energy exported from an electrical installation to the grid. The export control function may be integrated into the inverter or an external device.

Copyright Standards New Zealand

auto login of Electrical Workers Licensing Group is licenced to temporarily download this document.
Electrical Workers Licensing Group may print this document but not more than 10% of the documents subscribed to may be held in printed form at any one time.

The export control function for an IES may operate with the following export limits:

(a) *Hard limit*: A limit that will require the IES to disconnect.

(b) *Soft limit*: A limit that will cause the IES to reduce its output, preventing ongoing export greater than the limit.

The export limit may be specified as kVA and/or kW. Where the export limit is in kVA or kW, it shall apply to the total export from the electrical installation.

The export limit may be set to allow export to the grid or to provide a minimum import load from the grid. The soft limit may be utilized with the hard limit to minimize the number of disconnections due to exceeding the hard limit. Where both hard and soft limits are used, the requirements for the hard limit shall take precedence over the soft limit requirements.

The export control device settings shall be secured against inadvertent or unauthorized tampering. Changes to settings shall require the use of a tool and special instructions not provided to unauthorized personnel.

NOTE: Special interface devices and passwords are regarded as tools.

3.4.8.2 *Hard limit*

The hard limit of an export control function may apply to an IES that has a capacity greater than 30 kVA. In addition to the general requirements for the export control function, the following is required for the hard limit:

(a) Where the limit is in total kVA, or total kW for multi-phase systems, this shall be the net amount at the point of supply across all phases.

NOTE: The export function should monitor the export on each phase.

(b) In both single and three-phase systems, the export function shall monitor the export on each phase.

(c) Where the export control function is in an external device, the following applies:

(i) Where the net export limit is exceeded, the export control function shall ensure the IES has completed operating the disconnection device within two seconds. The IES may reduce the output below the net export limit within the two seconds to avoid disconnection.

(ii) If the IES loses its connection with the export control device, the IES shall operate its disconnection device. The connection to the export control device shall be re-established and stable before the IES is reconnected.

(d) Where the export control function is integrated into the inverter, the following applies:

(i) Where the net export limit is exceeded, the export control function shall be used to disconnect the IES and cease exporting within two seconds.

(ii) If the IES loses its connection with external devices required for the export control function, the IES shall operate its disconnection device. The connection to external devices shall be re-established and achieve stable operation before the IES is reconnected.

If the export control function is required to have a hard limit, it shall detect any fault or loss of operability of the export control function and operate the disconnection device.

Electrical Workers Licensing Group is licenced to temporarily download this document.
auto login of Electrical Workers Licensing Group may print this document but not more than 10% of the documents subscribed to may be held in printed form at any one time.

Copyright Standards New Zealand

3.4.8.3 *Soft limit*

The soft limit of an export control function may apply to all types of IES.

In addition to the general requirements for export control functions, the following is required for the soft limit:

(a) Where the limit is in total kVA, or total kW for multi-phase systems, this shall be the net amount at the point of supply across all phases.

NOTE: In all systems, the export control function should monitor the export on each phase.

(b) Where the net export limit is exceeded, the export control function shall operate to ensure the IES meets the export conditions within 15 seconds.

(c) If the IES and/or export control function loses its connection with the external device, the IES shall reduce IES output, to the limit setting as a maximum. The connection shall be re-established and stable for a minimum of 60 seconds before the export control function is restored.

If the export control function is required to have a soft limit, it shall detect any fault or loss of operability of the export control function and reduce IES active power output to zero.

NOTE: The provisions of this Clause apply 18 months after the publication of this Standard.

auto login of Electrical Workers Licensing Group is licenced to temporarily download this document.
Electrical Workers Licensing Group may print this document but not more than 10% of the documents subscribed to may be held in printed form at any one time.

Copyright Standards New Zealand

SECTION 4 CONNECTION OF INVERTER TO ENERGY SOURCE

4.1 GENERAL

The control, protection and wiring system equipment and installation shall be fit for purpose for the conditions to which they are likely to be exposed at the point of installation. The energy source equipment, switchgear and wiring shall be selected and installed to provide the following:

(a) Control and isolation of the energy source, and isolation from the inverter as required for operation, maintenance, testing and fault detection, or repair.

(b) Automatic disconnection of the energy source or inverter port, in the event of an overload, short circuit or excessive earth leakage current in the protected part of the electrical installation.

(c) Switchgear and control gear grouped and interconnected together on switchboards or in inverter control system components, enclosed against external influences.

(d) Electrical connections between the energy source and the inverter.

4.2 CONNECTORS OR COUPLING CONNECTIONS

Where connection to the inverter is by a flexible cable and connector or coupling device, these cables shall be secured in such a way as to prevent inadvertent disconnection or mechanical stresses on electrical connections. In any such instance, no greater than 300 mm of flexible cable shall be unsupported, with cables managed in such a way as to present no potential for being inadvertently placed under mechanical strain or subject to mechanical damage. The flexible cable shall be provided with strain relief by a cable gland or clamping mechanism at each end of the flexible cable.

The flexible cable shall be chosen to be appropriate for the connector or coupling device to which it will be attached.

Where the inverter's port connections meet the requirements of pluggable equipment type B then only connectors or couplers suitable for pluggable equipment type B shall be used. The inverter connector type shall not be modified. Connectors or couplers shall only be those of the same make, type and model as specified by the inverter manufacturer in the manufacturer's instructions or as labelled on the inverter.

Where the inverter energy source is from a PV array, the connectors used shall be of the make, type and model specified by the inverter manufacturer and shall comply with the requirements of AS/NZS 5033.

Connectors and couplers used in the IES shall allow safe interconnection between energy sources and inverters. Any connectors or coupling device shall ensure that there are no accessible live parts under any conditions.

NOTE: When an International Standard is published to allow safe interconnection of different brands of connectors and coupling devices, it is intended that this Clause will be amended appropriately.

auto login of Electrical Workers Licensing Group is licenced to temporarily download this document.
Electrical Workers Licensing Group may print this document but not more than 10% of the documents subscribed to may be held in printed form at any one time.

Copyright Standards New Zealand

4.3 CABLING

4.3.1 General requirements

Cabling for a.c. energy sources shall comply with the requirements of AS/NZS 3000 and the AS/NZS 3008.1 series.

Cabling for PV arrays shall comply with the requirements of AS/NZS 5033.

Cabling for d.c. energy sources other than PV arrays shall comply with AS/NZS 3000 and all of the following requirements:

(a) Be suitable for d.c. application.

(b) Have a voltage rating equal to or greater than the rated maximum energy source d.c. voltage.

(c) Have a temperature rating in accordance with the application.

(d) If exposed to the environment, be UV-resistant, or be protected from UV light by appropriate protection, or be installed in UV-resistant wiring enclosures (refer to AS/NZS 2053.1 or AS/NZS 61386.1).

NOTE: AS/NZS 2053.1 requires that conduit suitable for use in direct sunlight be marked with the letter 'T'.

(e) Be water resistant.

(f) Be flexible (multi-stranded) to allow for thermal/wind/seismic movement of the energy source.

NOTE: For LV systems, tinned copper is recommended to reduce degradation of the cable over time.

(g) In all systems operating at voltages above ELV, cables shall be selected so as to minimize the risk of earth faults and short-circuits. This is commonly achieved using double-insulated cables, particularly for cables that are exposed or laid in a metallic cable tray or wiring enclosure.

All d.c. cables should be installed so that positive and negative cables of individual circuits are bundled together, avoiding the creation of wiring loops in the system. This recommendation for avoidance of loops and bundling includes any associated earthing/bonding conductors.

4.3.2 Cable identification

All energy source (d.c. or a.c.) cables shall be clearly identified as energy source cables at intervals not exceeding 2 m. Cable identification shall be permanent, legible, indelible and include type of energy source. If fixed to a surface, the identification shall be visible after mounting.

Where the energy source is a PV array, the cable identification shall comply with the requirements of AS/NZS 5033.

Where cabling is located within wiring enclosures (e.g. conduit or trunking), the wiring enclosure shall be labelled with the type of energy source at intervals not exceeding 2 m. If fixed to a surface, the identification shall be visible after mounting.

NOTE: Examples include: 'SOLAR' for PV array cable identification, 'WIND' for wind turbine energy source cables, and 'BATTERY' for battery energy storage source cabling.

Cable and wiring enclosure identification shall be—

(a) sufficiently durable for its purpose;

(b) constructed of appropriate materials suitable for the location;

(c) fixed in a manner appropriate for the location;

COPYRIGHT

Copyright Standards New Zealand

Electrical Workers Licensing Group is licenced to temporarily download this document.
auto login of Electrical Workers Licensing Group may print this document but not more than 10% of the documents subscribed to may be held in printed form at any one time.

(d) in English;

(e) legible and in a letter size appropriate for the location;

(f) indelible; and

(g) visible, e.g. cable labelling shall be visible after mounting and not obscured by walls or supports.

4.4 OVERCURRENT PROTECTION

Where the energy source is a PV array, AS/NZS 5033 shall be used to determine if overcurrent protection is required and at which locations.

All other energy source cabling shall be protected against overcurrent in accordance with AS/NZS 3000.

NOTE: Overcurrent protection of the cable needs to take into account fault currents that may be sourced from the inverter and the energy source output.

Devices for protection against overcurrent shall not be provided for circuits where unexpected opening of the circuit could cause a danger greater than overcurrent.

NOTE: Some generation sources, such as some wind turbines, require the output to be short circuited to provide braking for safety reasons. In this situation, the overcurrent device may be omitted.

Where the energy system incorporates a battery storage system, overcurrent protection shall be provided to protect, as far as practicable, all wiring from prospective short circuit current or overload current from the battery storage system.

NOTE: Overcurrent protection may be by high rupturing capacity (HRC) fuses or circuit breakers suitable for operation on d.c., sized to limit the current below the maximum current-carrying capacity of any part of the connected circuit. The wiring from the battery terminals to the overload protection device should be as short as possible, with special attention paid to its mechanical protection.

4.5 ISOLATION DEVICES

A labelled isolation device, able to be secured in the open position, shall be provided between any energy source and the inverter. This device shall comply with the requirements of devices for isolation and switching in AS/NZS 3000 and be capable of safely breaking voltage and current under both normal and fault conditions.

The isolation device shall be located adjacent to the inverter energy source port and be readily available unless the energy storage and the inverter are physically integral, in which case the requirements of AS 62040.1.1 shall be adhered to. Where there are multiple inverter energy source ports, each port shall have an isolator for each connected energy source.

Semiconductor (solid-state) devices shall not be used for isolation purposes.

The isolating device shall not be located within the operational portion of the inverter; if the inverter needs to be removed from service, the isolation device shall remain in place.

This requirement does not apply where—

(a) the serviceable section is interlocked with the isolating device;

(b) all live parts are inside enclosures or behind barriers that provide a degree of protection of at least IPXXB or IP2X (i.e. all live parts are screened from touch); or

(c) all live parts are isolated automatically.

Copyright Standards New Zealand

auto login of Electrical Workers Licensing Group is licenced to temporarily download this document.
Electrical Workers Licensing Group may print this document but not more than 10% of the documents subscribed to may be held in printed form at any one time.

Where the energy source is a PV array, the isolation switches and isolation arrangements shall comply with the requirements of AS/NZS 5033.

Where the energy system incorporates a battery storage system, the battery isolator switch location(s) shall also ensure all inputs and outputs to the battery storage system are able to be isolated adjacent to the location of the battery storage system.

Where lead-acid or nickel cadmium batteries are used, the system shall also comply with the requirements of the AS 3011 series and AS 4086.2. All other battery types should be installed to manufacturer's instructions.

NOTE: The energy source isolator isolates the energy source from the inverter. In many cases the energy source is not de-energized and appropriate warnings should be included where applicable.

Copyright Standards New Zealand

auto login of Electrical Workers Licensing Group is licenced to temporarily download this document.
Electrical Workers Licensing Group may print this document but not more than 10% of the documents subscribed to may be held in printed form at any one time.

SECTION 5 ADDITIONAL REQUIREMENTS

5.1 EARTH FAULT DETECTION

5.1.1 General

Where the inverter requires external devices for earth fault protection, then additional external devices shall be installed in accordance with the inverter manufacturer's instructions or as labelled on the inverter.

NOTE: IEC 62109-2 requires the manufacturer to provide earth leakage and insulation monitoring or provide instructions as to how to achieve this.

5.1.2 Insulation monitoring

Where the inverter does not provide the required insulation resistance measurement for PV arrays, as required in AS/NZS 4777.2 and IEC 62109-2, an external device that provides the same functionality shall be installed.

5.1.3 Residual current detection for PV IES

Residual current detection shall be in accordance with the requirements of AS/NZS 5033 and the manufacturer's instructions.

5.2 SEGREGATION OF CIRCUITS

In addition to the requirements detailed in AS/NZS 3000, segregation shall be provided between d.c. and a.c. circuits within enclosures such that connections and pathways are physically segregated from each other by an insulating barrier(s). D.C. wiring shall not be installed or pass through a.c. switchboards or enclosures unless segregated by means of an insulating barrier, such as conduit or trunking.

Where devices such as switches for circuits requiring segregation are mounted on a common mounting rail in an enclosure, this rail shall not be metallic or conductive.

Segregation insulation barriers between the d.c. and a.c. circuits shall be equivalent to double insulation for the highest voltage level present and appropriate for the installation environment.

The different types of circuits shall be clearly identified (e.g. by labels and, where possible, by use of different coloured cables).

Outside of enclosures, a separation of 50 mm or a segregation insulation barrier between a.c. and d.c. circuits shall be provided.

Segregation insulation barriers between the d.c. and a.c. circuits shall be to the appropriate level for the installation environment and not less than IP4X.

5.3 ADDITIONAL INSTALLATION REQUIREMENTS

5.3.1 Inverter installation

The inverter shall be—

(a) installed in a suitable, well-ventilated place;

(b) installed in accordance with the IP rating and the manufacturer's specific requirements;

(c) arranged so as to provide accessibility for operation, testing, inspection, maintenance and repair, with sufficient space and access for the initial installation and for later replacement of individual items of the control and protective devices; and

Copyright Standards New Zealand

auto login of Electrical Workers Licensing Group is licenced to temporarily download this document.
Electrical Workers Licensing Group may print this document but not more than 10% of the documents subscribed to may be held in printed form at any one time.

(d) arranged to prevent ingress of vermin, insects, water and dust, so as to prevent deterioration of the operational functions of the inverter.

All wiring into the inverter and any associated switchboard shall be installed in such a manner that, in the event of a fire in the inverter or associated switchboard, the spread of fire shall be kept to a minimum.

The inverter shall not be located in a restricted location as defined for switchboards in AS/NZS 3000.

The inverter and associated isolating switch shall be located such that they are readily available.

NOTE: No mounting height has been nominated within this Standard. Some local regulations may have relevant requirements.

5.3.2 Equipment weatherproofing

Electrical equipment, components and connections where the presence of water or high humidity presents an increased risk shall be selected and installed to—

(a) operate safely near or within a damp or wet environment;

(b) provide additional protection against electric shock; and

(c) provide adequate protection against damage that might reasonably be expected from the presence of water, high humidity or solar radiation (direct sunlight).

Wiring systems or enclosures shall be selected and installed so that the entry of water is prevented and does not cause damage.

Where water may collect or condensation may form in a wiring system, to the extent that it creates a hazard, provision shall be made for its harmless escape through suitably located drainage points in a way that does not compromise the IP rating of the enclosure.

NOTE: Damp situations and exposure to the environment are considered to be outdoors and unprotected.

5.3.3 Seismic protection

In New Zealand, all equipment and wiring shall be restrained to cater for seismic (earthquake) forces. NZS 4219 provides guidance on suitable restraint arrangements.

5.4 ADDITIONAL REQUIREMENTS FOR MULTIPLE MODE IES

5.4.1 General

A multiple mode IES with a separate stand-alone port connected to a stand-alone distribution system for the connection to equipment requiring a continuous supply is one possible configuration. It is also possible for a multiple mode inverter to have a grid-interactive port that is also capable of operation with stand-alone functionality. In designing these systems, the manufacturer's installation instructions and consideration of the alternative supply arrangements of AS/NZS 3000 shall be applied.

NOTE: Alternative supply arrangements in AS/NZS 3000 include important functions to be maintained, including the maintenance of an MEN connection, the operation of RCDs and the continuity of neutral conductors.

Typical configurations of multiple mode IES are shown in Figure 3 and Figure 4. In both of these instances, consideration of operation under fault conditions and when functioning as a stand-alone supply needs to ensure that the installation remains safe.

NOTE: In New Zealand, alternative connection arrangements are under consideration for multiple mode IES with a separate stand-alone port connected to a switchboard that does not contain a neutral to earth link (MEN link).

Electrical Workers Licensing Group may print this document but not more than 10% of the documents subscribed to may be held in printed form at any one time.
auto login of Electrical Workers Licensing Group is licenced to temporarily download this document.

Copyright Standards New Zealand

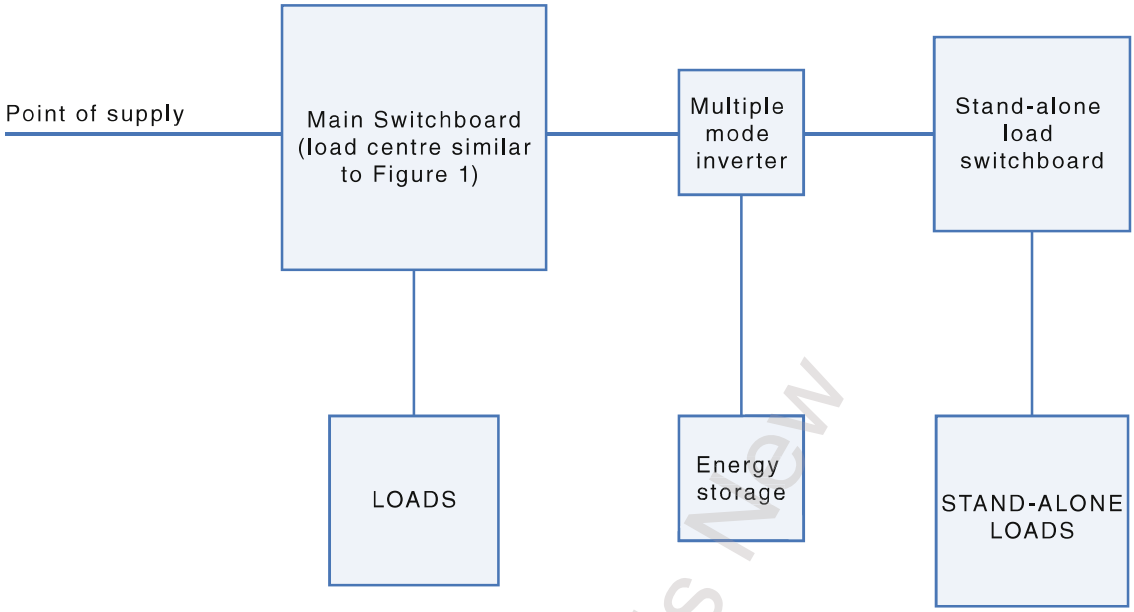

FIGURE 3 TYPICAL MULTIPLE MODE IES WITH SEPARATE STAND-ALONE LOADS

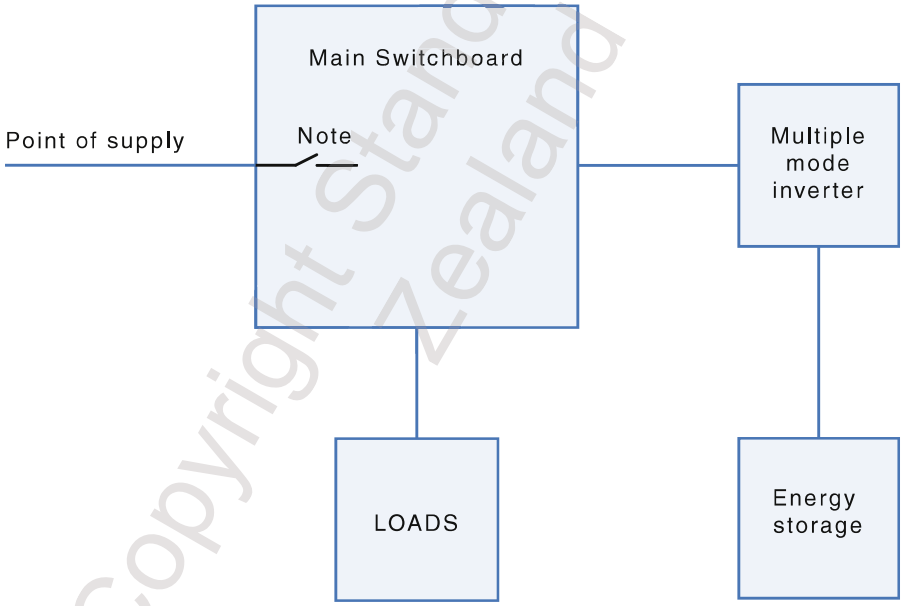

NOTE: An external disconnection device is controlled by the multiple mode inverter that switches from grid-connect mode to stand-alone mode.

FIGURE 4 TYPICAL MULTIPLE MODE IES WITH EXTERNAL DISCONNECTION DEVICE TO SEPARATE FROM GRID AND PROVIDE STAND-ALONE SUPPLY

In addition to complying with the other requirements of this Standard, an IES incorporating a multiple mode inverter shall comply with the following requirements.

Additional labelling and signage shall be provided in accordance with Section 6.

5.4.2 Additional inverter requirements

The inverter shall comply with the requirements of AS/NZS 4777.2 for multiple mode inverters with a stand-alone functionality.

NOTE: Non-isolated multiple mode inverters with a stand-alone port functionality require earth fault protection, which can be internal or through use of a correctly rated RCD.

COPYRIGHT

Copyright Standards New Zealand

Electrical Workers Licensing Group is licenced to temporarily download this document.
auto login of Electrical Workers Licensing Group may print this document but not more than 10% of the documents subscribed to may be held in printed form at any one time.

5.4.3 Circuit arrangement

For a multiple mode IES with stand-alone functionality, the final subcircuits of the multiple mode inverter should be located in a separate stand-alone supply load centre or distribution switchboard. Where the stand-alone supply is used as an alternative supply for the electrical installation, the alternative supply arrangements of AS/NZS 3000 shall be applied. All sources of supply associated with multiple mode IES shall be clearly identified and uniquely labelled.

There shall be a main switch for the stand-alone port of the multiple mode IES.

All cabling from the multiple mode IES shall be protected against overcurrent in accordance with AS/NZS 3000. Overcurrent protection device ratings shall be in accordance with the manufacturer's instructions.

When operating in stand-alone mode, the stand-alone port shall provide an earth referenced a.c. supply. Where the IES stand-alone functionality requires a double pole (switching both active and neutral), the minimum voltage rating of the changeover device shall be at least twice the a.c. supply voltage.

NOTE: Design notes for this arrangement are given in Appendix B.

The provision of AS/NZS 3000 for the use of RCDs as a method for mechanical protection of the IES grid-interactive port submain is not permitted for the multiple mode IES grid-interactive port.

5.4.4 RCDs on multiple mode inverter system final subcircuits

RCD protection shall be installed on final subcircuits in accordance with AS/NZS 3000.

When RCDs are installed to protect electrical installation connected loads on a stand-alone port of a multiple mode inverter, they shall be of a type that correctly operates on the stand-alone port output waveform and be in accordance with the requirements specified by the manufacturer for use with the inverter.

5.5 MULTIPLE INVERTER INSTALLATIONS

5.5.1 General

There are installations where more than one IES is needed to meet the requirements of the consumer and the consumer installation is connected at a single point of supply to the grid. The connection of these IES may be to a main switchboard (see Figure 1) or to multiple distribution boards (see Figure 2) spread across the site in the same building or many buildings or locations. In larger installations, this may include multiple distribution boards that are used to connect parts of an IES together, then connect to the main switchboard (see Figure 5) or distribution switchboard (see Figure 6). Where practicable, the connection of multiple IES should be made at the main switchboard and controlled using one main switch (inverter supply).

Where there are multiple IES intended to be directly connected to an individual switchboard, there shall only be one main switch (inverter supply). Individual systems should have separate isolation switches, which should be housed in a separate switchboard or load centre.

Electrical Workers Licensing Group may print this document but not more than 10% of the documents subscribed to may be held in printed form at any one time.
auto login of Electrical Workers Licensing Group is licenced to temporarily download this document.

Copyright Standards New Zealand

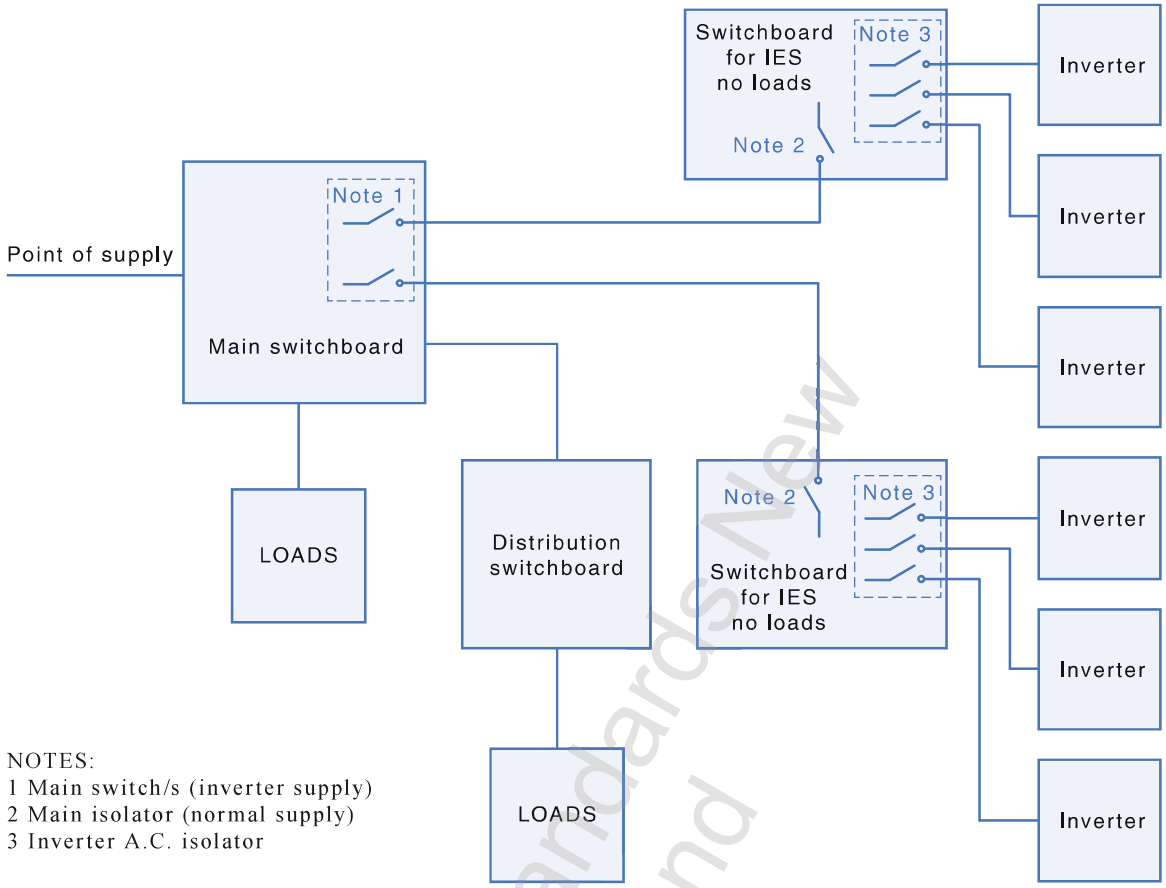

FIGURE 5 TYPICAL MULTIPLE DISTRIBUTION BOARDS USED AS AGGREGATION/MARSHALLING POINTS FOR THE IES THEN CONNECTED TO A MAIN SWITCHBOARD

Copyright Standards New Zealand

auto login of Electrical Workers Licensing Group is licenced to temporarily download this document.
Electrical Workers Licensing Group may print this document but not more than 10% of the documents subscribed to may be held in printed form at any one time.

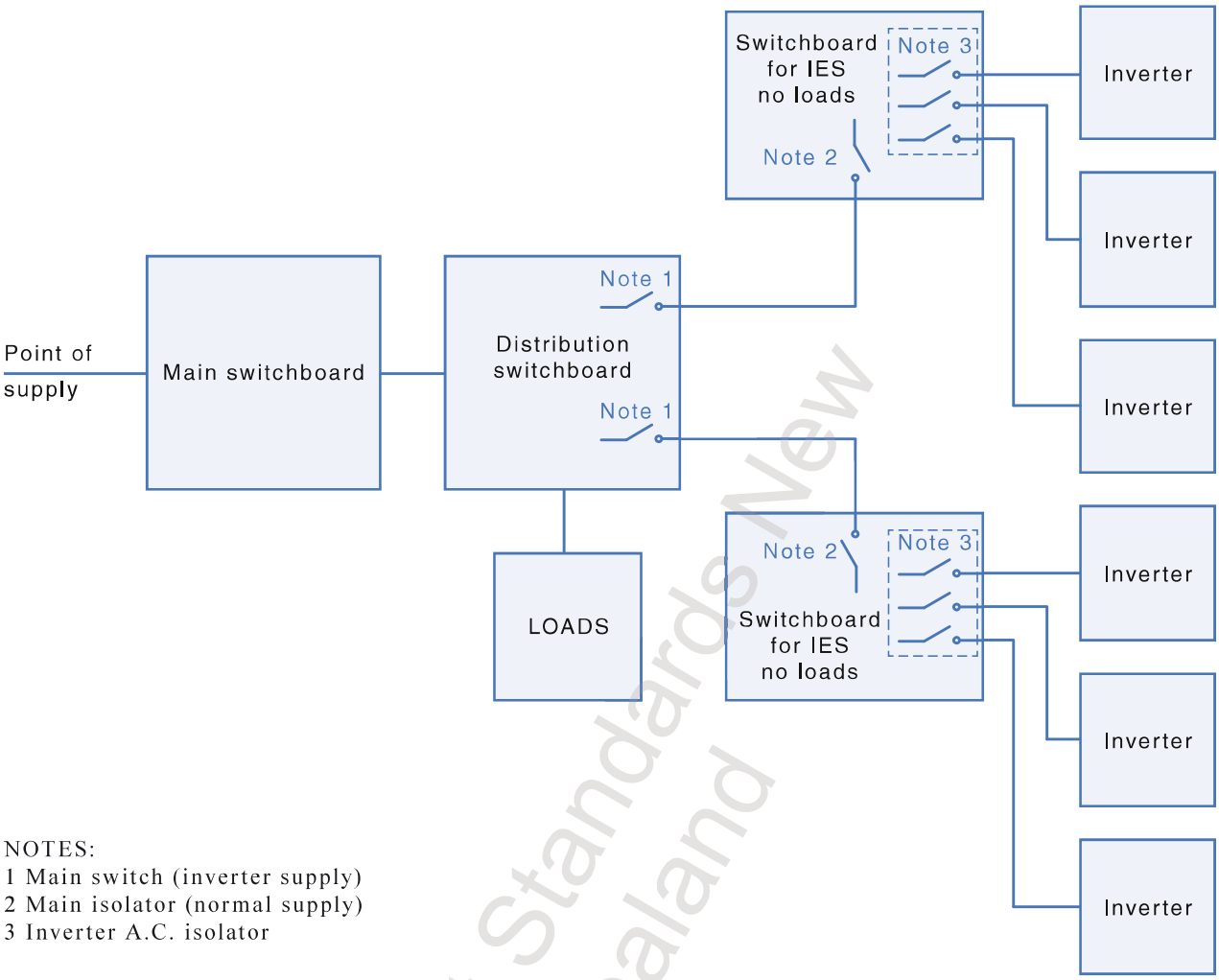

FIGURE 6 TYPICAL MULTIPLE DISTRIBUTION BOARDS USED AS AGGREGATION/MARSHALLING POINTS FOR THE IES THEN CONNECTED TO A DISTRIBUTION SWITCHBOARD

Any portion of the installation that is required to be isolated for maintenance or installation of new circuits shall be able to be safely isolated from any IES within the installation and from the point of supply. This is typically achieved by use of isolation switches on that part of the installation as well as other connected parts.

The following are some common examples of multiple inverter installations within single installations:

(a) Retirement village, townhouse complex or other multiple premise sites.

(b) Commercial buildings with large loads.

(c) PV arrays with micro inverters or groups of inverters.

Where multiple inverters are used to make up an IES, all inverters used should meet the requirements for multiple inverter combinations in AS/NZS 4777.2.

5.5.2 Single inverter or group of inverters with capacity no more than 5 kVA per phase

An IES comprised of a single inverter or group of inverters with total capacity of no more than 5 kVA per phase may be isolated by a single isolator adjacent to the group of inverters to meet the requirements for an isolating switch adjacent to the inverter of Clause 3.4.3.

Copyright Standards New Zealand

auto login of Electrical Workers Licensing Group is licenced to temporarily download this document.
Electrical Workers Licensing Group may print this document but not more than 10% of the documents subscribed to may be held in printed form at any one time.

Where the inverter or group of inverters are connected via terminals on each of the inverter(s), the isolator shall be a labelled isolating switch.

For a single inverter or group of inverters comprised of pluggable equipment type B and connected by a flexible cable, an installation coupler may be used as an isolation point as an alternative for the adjacent isolation switch. This does not apply to multiple mode inverters. When an installation coupler is used it shall be—

(a) shrouded, touch-safe and suitable for the environment;

(b) at the point of transition from inverter interconnect cable to the fixed installation wiring;

(c) adjacent to the location of the inverter or group of inverters; and

(d) labelled as to its purpose and include a warning if it is not suitable to break the rated current of the inverter or group of inverters.

The cabling from the inverter's a.c. isolator to the connected inverters shall be protected against overcurrent (refer to Clause 3.4.2).

NOTE: This allows use of a single isolator and overcurrent protection for a group of inverters. Refer to the manufacturer's installation instructions.

Where there are multiple groups of inverters that are not adjacent, then multiple isolators shall be used.

NOTE: This allows for the typical installation practices used for micro-inverters (a type of inverter) which are defined in AS/NZS 5033.

5.5.3 Inverters on the same switchboard

5.5.3.1 *General*

When an electrical installation has multiple inverters that are installed as part of one IES or as multiple IES, the main considerations are the safe isolation of the system(s) under all conditions and the provision of suitable labelling and instructions to achieve shutdown of the system(s).

In all situations, the output of the IES should be balanced across phases based on the rated current of each of the inverters and have additional protection as required in Clause 3.4.4.

Refer to Table 4 for additional requirements for connecting multiple inverters or IES to a single switchboard.

NOTE: The AS/NZS 3000 principle is to keep the number of main switches to the minimum practicable to provide effective operation in an emergency.

5.5.3.2 *IES connected to switchboards with loads*

Where multiple inverters are connected directly to a main switchboard or a distribution board with other circuits and loads, and each has a main switch (inverter supply), then they shall be grouped. Where the consumer installation is three-phase, then a three-pole main switch (inverter supply) shall be used, with the IES balanced across the three phases of the consumer installation. Where the number of main switches (inverter supply) on a switchboard exceeds two, then a single main switch (inverter supply) shall be used to isolate all connected IES. In this situation, a distribution switchboard should be used with isolation provided for each inverter or IES.

5.5.3.3 *IES connected to switchboards without loads*

Where multiple inverters are connected to a distribution switchboard as part of the IES installation (such as the switchboard for IES no loads shown in Figures 5 and 6), this distribution switchboard shall have a single isolator (normal or submain supply). Each connected inverter shall have an inverter a.c. isolator provided in the distribution switchboard and have clear labelling identifying which inverter is isolated by operation of

COPYRIGHT

Copyright Standards New Zealand

auto login of Electrical Workers Licensing Group is licenced to temporarily download this document.
Electrical Workers Licensing Group may print this document but not more than 10% of the documents subscribed to may be held in printed form at any one time.

the isolator. It is preferred that in this arrangement, where practical, the IES distribution switchboard is connected to the main switchboard via a single main switch (inverter supply). This arrangement is shown in Figure 5.

TABLE 4

ISOLATION AND ARRANGEMENT OF MAIN SWITCHES AT A MAIN SWITCHBOARD OR DISTRIBUTION SWITCHBOARD FOR MULTIPLE INVERTER INSTALLATIONS

Maximum rating of IES	Single-phase supply connection	Two-phase supply connection	Three-phase supply connection	Three-phase supply connection
Type of inverter	**Single-phase**	**Single or two-phase**	**Single-phase**	**Three-phase**
IES ≤5 kVA	Grouped	Grouped Where number of IES is ≥2, a two-pole main switch shall be installed	Grouped Where number of IES is >2, a three-pole main switch should be installed	Single three-pole main switch shall be installed
5 < IES ≤30 kVA	Not permitted	Two-pole main switches shall be installed. Where number of main switches required on a switchboard is ≥2, then a single main switch (inverter supply) with its own distribution switchboard as per Figures 5 and 6 should be used	Three-phase main switches shall be installed. Where number of main switches required on a switchboard is >2, then a single main switch (inverter supply) with its own distribution switchboard as shown in Figures 5 and 6 should be used	Single three-pole main switch shall be installed
30 < IES ≤200 kVA	Not permitted	Not permitted	Where inverters are co-located (Figures 5 and 6) single submain switches (inverter supply) shall be used. Where inverters are not co-located, the number of isolation points for safe isolation should be minimized	Single three-pole main switch shall be installed

5.5.4 Inverter energy systems (IES) on different distribution switchboards

Where an installation has multiple distribution switchboards with attached loads and a single IES with an output rating of less than 5 kVA connected at each switchboard (such as in Figure 2), if the voltage balance at the point of supply with the electricity distributor is not adversely affected, then there may be no further requirement for additional phase balance protection, even though the total of all IES exceeds 30 kVA.

NOTE: The voltage balance limitations are defined as required by the electricity distributor.

Where multiple distribution switchboards are used to connect these IES to a common distribution switchboard and the IES switchboards are without local loads, then up to the common switchboard shall be treated as a single IES installation and additional protection for phase balance shall be provided at that switchboard as per Clause 3.4.4.

Electrical Workers Licensing Group is licenced to temporarily download this document.
auto login of Electrical Workers Licensing Group may print this document but not more than 10% of the documents subscribed to may be held in printed form at any one time.

Copyright Standards New Zealand

SECTION 6 SIGNS AND LABELS

6.1 GENERAL

The purpose of the provisions for signs and labels given in this Section is to clearly indicate that the electrical installation has multiple supplies and which circuits are affected by these supplies.

Signs relating to the IES shall be placed on the switchboard to which the IES is directly connected. If the IES is directly connected to a distribution switchboard, additional signs shall also be placed on the main switchboard and all intermediate distribution switchboards. To provide assistance for emergency services, additional signs should be provided at fire indicator panels, where used.

Additional signs may be required by relevant authorities or electricity distributors.

All signs required in this Section shall be—

(a) sufficiently durable for their purpose;

(b) constructed of appropriate and durable materials suitable for the location, and where installed exposed to direct sunlight, shall use UV stabilized materials;

(c) fixed in a durable manner appropriate for the location;

(d) in English;

(e) legible and in a letter size appropriate for the location;

(f) designed to have a lifetime greater than or equal to the service life of the IES;

(g) indelible; and

(h) visible, as required, at the installed position.

NOTE: It should be noted that signs such as some battery signs may need to be within the battery enclosure and hence may only become visible after opening the battery enclosure.

Signs should not be obscured by being located inside cupboards, behind doors or other materials. Signs should not be located where they can be obscured by materials placed in front of them or be located where it is likely that material will be placed in front of them (e.g. immediately above a shelf).

NOTES:

1 Sign lettering should be sized with upper case lettering of 5 mm high and lower case of 4 mm high per metre of viewing distance.

2 As a guide, the background colour and lettering colour should follow the principles listed below:

(a) Signs for general information should be white with black lettering.

(b) Signs for the essential safety of service personnel should be yellow with black lettering.

(c) Signs for attention of emergency personnel should be red with white lettering.

3 Examples of the signs specified in this Section are given in Appendix A.

Electrical Workers Licensing Group is licenced to temporarily download this document.
auto login of Electrical Workers Licensing Group may print this document but not more than 10% of the documents subscribed to may be held in printed form at any one time.

Copyright Standards New Zealand

6.2 SIGNS FOR THE SWITCHBOARD TO WHICH THE IES IS DIRECTLY CONNECTED

The following signs shall be installed on the switchboard to which the IES is directly connected:

(a) A sign containing the text 'WARNING', 'MULTIPLE SUPPLIES' and 'ISOLATE ALL SUPPLIES BEFORE WORKING ON THIS SWITCHBOARD'. This sign shall be installed in a prominent position on the switchboard.

(b) A sign containing the text 'MAIN SWITCH (INVERTER SUPPLY)'. This sign shall be installed adjacent to the main switch for the IES.

(c) Where the inverter is connected to the main switchboard, a sign containing the text 'MAIN SWITCH (GRID SUPPLY)'. This sign shall be installed adjacent to the main switch(es) for the grid supply.

(d) Where the inverter is connected to a distribution switchboard, a sign containing the text 'MAIN ISOLATOR (NORMAL SUPPLY)'. This sign shall be installed adjacent to the isolator(s) for the normal supply to the distribution switchboard.

NOTE: In some areas, alternate words may be used for 'grid supply' to indicate the mains supply or the supply from the electricity distributor; acceptable alternatives that can be used for 'grid supply' include 'mains supply' and 'normal supply'.

If the inverter(s) is not immediately adjacent to the switchboard, the actual location of the inverter(s) shall be provided in a prominent position on the switchboard.

Labels shall be mounted in positions that are visible to personnel operating within the switchboard.

6.3 SIGNS FOR OTHER SWITCHBOARDS

Where the IES is directly connected to a distribution switchboard, signs shall be installed in prominent positions on the main switchboard and all intermediate distribution switchboards. These signs shall contain the text 'WARNING', 'MULTIPLE SUPPLIES' and 'ISOLATE INVERTER SUPPLY AT DISTRIBUTION SWITCHBOARD' and 'LOCATION' where 'LOCATION' refers to the physical location of the switchboard that the IES is directly connected to.

NOTE: An example is provided in Appendix A.

6.4 SIGNS FOR INVERTER LOCATIONS

Inverter locations that are difficult to find or in large buildings should be shown on a plan (map or drawing) located at the main switchboard and/or fire panel.

6.5 ENERGY SOURCE LABELLING

Where no Standard exists for the energy source being installed, the following labelling shall be included as a minimum:

(a) The rated a.c. voltage or maximum d.c. voltage and potential short circuit current rating shall be labelled, on the enclosure in the case of batteries and at the isolation point for any energy sources.

(b) Any specific operational considerations for isolation shall be clearly marked, (e.g. 'Isolate at main switchboard before operating this isolator').

(c) Sites with energy storage systems shall require a circular green reflector sign at least 70 mm in diameter with the letters 'ES' on or immediately adjacent to the meter box and main switchboard so as to be readily visible to approaching emergency workers.

Electrical Workers Licensing Group is licenced to temporarily download this document.
auto login of Electrical Workers Licensing Group may print this document but not more than 10% of the documents subscribed to may be held in printed form at any one time.

Copyright Standards New Zealand

6.6 DEMAND RESPONSE MODE (DRM) LABELLING

The installer should ensure that appropriate (DRM) labelling is either already provided on the inverter by the manufacturer, or is applied to the inverter as required. This label shall indicate the demand response modes of which the unit is capable. It shall indicate on the label which functions have been connected and enabled.

6.7 SIGNS FOR SHUTDOWN PROCEDURE

A permanent sign detailing the shutdown procedure for the IES in the event of an emergency situation shall be installed adjacent to and visible from the equipment or the switch to be operated in the event of a shutdown.

Where a building has a fire panel, a sign shall be installed at the fire panel stating 'MULTIPLE SUPPLIES' with instructions as to the location of the IES shutdown procedures.

The sign detailing the shutdown procedure may also include the start-up procedure.

A warning shall be included in the shutdown procedure indicating that isolation of the energy source by shutting down the inverter and isolating the IES may not de-energize the energy source and further actions may be required.

6.8 SIGNS LOCATED ADJACENT TO INVERTER(S)

The following signs shall be installed for labelling of isolators adjacent to the inverter(s).

(a) 'INVERTER A.C. ISOLATOR'.

(b) '<ENERGY SOURCE, TYPE> ISOLATOR' where 'ENERGY SOURCE' is the energy source (e.g. PV) and 'TYPE' is either a.c. or d.c. (e.g. 'PV ARRAY, D.C. ISOLATOR'. 'WIND TURBINE, A.C. ISOLATOR', 'BATTERY BANK, D.C. ISOLATOR').

6.9 SIGNS FOR MULTIPLE SYSTEMS

Where multiple IES are installed within one electrical installation, signage and labelling shall be clear and combined with consistent terminology and without clutter.

Where multiple IES are installed at one electrical installation, signage shall accurately reflect which devices control which items of equipment.

6.10 SIGNS FOR MULTIPLE ENERGY SOURCES

Where multiple energy sources are connected to an IES, a warning sign shall be installed adjacent to the inverter(s) indicating that all energy sources shall be turned off to achieve complete isolation.

6.11 SIGNS FOR MULTIPLE MODE IES (INCLUDING SYSTEMS WITH STAND-ALONE FUNCTIONALITY)

A warning sign shall be installed in the main switchboard and any intermediate distribution switchboards warning that a multiple mode IES with stand-alone functionality is connected and the requirement to follow the shutdown procedure for safe isolation. Additionally this warning sign shall include the text: 'Neutral and earth circuits may be live under fault conditions'.

The main switch for the stand-alone port of the multiple mode IES shall have the sign 'MAIN SWITCH (STAND-ALONE SUPPLY)'.

NOTE: In some situations, alternate words may be used in place of 'stand-alone supply' to indicate the most appropriate type, for example, 'alternative supply' or 'UPS supply'.

Copyright Standards New Zealand

auto login of Electrical Workers Licensing Group is licenced to temporarily download this document.
Electrical Workers Licensing Group may print this document but not more than 10% of the documents subscribed to may be held in printed form at any one time.

6.12 SIGNS FOR EMERGENCY SERVICES

An IES installation with an energy source that presents a potential hazard to emergency services when responding to an event at the site shall have a sign provided to indicate the hazard. This sign should be modified according to the specifics of the particular installation in regard to particular hazards that may be present. For PV arrays, the requirements of AS/NZS 5033 shall apply.

Electrical Workers Licensing Group may print this document but not more than 10% of the documents subscribed to may be held in printed form at any one time.
auto login of Electrical Workers Licensing Group is licenced to temporarily download this document.

Copyright Standards New Zealand

SECTION 7 SYSTEM DOCUMENTATION AND COMMISSIONING

7.1 GENERAL

At the completion of the installation of an IES, documentation shall be provided in accordance with the requirements of this Section. This documentation should ensure key system information is readily available to customers, inspectors, maintenance service providers and emergency service personnel.

7.2 MANUAL

A manual, complete with the following, shall be provided:

(a) Basic system information including system rating and component ratings, commissioning date and equipment location.

(b) List of electrical equipment supplied—with model description and serial numbers.

(c) System performance estimate—System output performance including expected seasonal or operational variation, including any limitations or assumptions.

(d) Operating instructions (system and components)—A short description of the function and operation of all installed equipment.

NOTE: More detailed information should be available in the manufacturer's documentation [see Item (k)].

(e) Shutdown and isolation procedure for emergency and maintenance that shall ensure safe de-energization of the system.

(f) Procedure for verifying correct system operation and what to do in the case of a system failure.

(g) Maintenance procedure and timetable—A maintenance checklist for the installed equipment.

(h) Commissioning records and installation checklist—A completed record of the initial system settings at the time of system installation and commissioning checklists for quality assurance (including documentation in accordance with Clause 7.6).

(i) Warranty information—A statement of the system warranty period, any limitations and supplied equipment warranties.

(j) System connection diagram—A diagram showing the electrical connections of the system.

NOTE: In larger installations, separate schematic circuit and wiring diagrams should be provided.

(k) Equipment manufacturers' documentation, data sheets and handbooks—For all equipment items supplied (as a minimum, this would include the inverter instruction manual and energy source equipment instruction manuals, such as documentation for charge controllers, PV modules, energy storage system details, wind turbine operation manual).

(l) Contact personnel for installation queries and system support.

(m) Initial verification report as per Clause 7.3.2.

(n) Voltage rise calculations or measurements including any assumptions as required in Clause 3.3.3.

(o) Details of any central protection installed, including devices, wiring and settings.

COPYRIGHT

Copyright Standards New Zealand

auto login of Electrical Workers Licensing Group is licenced to temporarily download this document.
Electrical Workers Licensing Group may print this document but not more than 10% of the documents subscribed to may be held in printed form at any one time.

(p) Power quality response modes, if implemented.

(q) DRED wiring and DRMs connected, if implemented.

(r) Export control including devices, settings and wiring.

Where multiple IES are installed within the one electrical installation, documentation should be clear with consistent terminology.

7.3 VERIFICATION

7.3.1 General

The verification of an IES shall be carried out in accordance with the requirements of AS/NZS 3000 for verification prior to energizing and placing the installation into service. These requirements represent minimum standards of inspection and testing that need to be complied with to meet the minimum safety requirements for the installation. In addition to the verification requirements of AS/NZS 3000, the steps set out in the following clauses shall be completed.

Upon completion of the verification process of an IES, a report shall be provided for retention within the manual. This report shall include the following:

(a) Summary of information describing the system (name, address etc.).

(b) A list of circuits and equipment that has been inspected.

(c) A record of the inspection.

(d) A record of the test results for each circuit tested.

(e) Recommended interval until next verification.

(f) Signature, name and qualification of person(s) undertaking the verification.

(g) Date at which the verification and commissioning took place.

NOTES:

1 The report should be provided to the person with overall responsibility for the installation.

2 Local electrical legislation may require formal verification inspections and testing to satisfy legislation of electrical installation work; such verification may be additional to the above inspections.

3 Appendix D provides some recommendations regarding post-installation verification and maintenance.

7.3.2 Initial verification

Verification of a new installation shall be performed in accordance with AS/NZS 3000. The initial verification report shall include additional information regarding the person(s) responsible for the design, construction and verification of the IES. It shall also include a listing of all programmable setpoints and requirements that have determined these set points.

NOTE: The requirements may be set by an electricity distributor for local compliance and may relate to specific grid types.

The initial verification report shall make a recommendation for the interval of periodic verification. The period should be determined by the installation type and equipment, its use and operation, the frequency and quality of maintenance, and the external influences to which it may be submitted.

NOTE: The reporting template should be provided to the person with overall responsibility for the installation for their retention.

The initial verification report shall be included in the manual provided with the IES.

Electrical Workers Licensing Group is licenced to temporarily download this document.
auto login of Electrical Workers Licensing Group may print this document but not more than 10% of the documents subscribed to may be held in printed form at any one time.

Copyright Standards New Zealand

7.3.3 Periodic verification

Periodic verification of an installation shall be performed in accordance with AS/NZS 3000 and AS/NZS 3019. Where available, the results of previous verification reports shall be taken into account when performing periodic verification.

After the completion of a periodic verification, a report shall be provided and include a list of any faults or recommendations for repairs or improvements (such as upgrading a system to meet current standards).

NOTE: Periodic verification of an installation needs to be performed to the requirements of—

(a) the regulatory authority;

(b) the equipment manufacturers; and

(c) the owner or occupier of the premises.

7.3.4 Alterations, additions and repairs

Where there is an alteration, addition or repair to an IES installation, the consumer installation between the main switch (inverter supply) and the electricity distributor point of supply shall be verified to ensure that the alteration, addition or repair complies with this Standard and does not impair the safety of the existing electrical installation.

7.4 VISUAL INSPECTION

Visual inspection shall precede testing and shall be done prior to energizing the IES. The inspection shall be performed in accordance with the requirements of AS/NZS 3000 for visual inspection. In addition to those requirements, the following shall be inspected:

(a) Equipment is installed in accordance with the requirements of this Standard.

(b) Signs are installed and applied correctly in accordance with the requirements of Section 6.

(c) Energy source is installed in accordance with relevant standards and/or manufacturers' instructions.

NOTE: Where the energy source is a PV array installation, the relevant standard is AS/NZS 5033.

7.5 TESTING

The testing of the installation shall be performed in accordance with the testing requirements of AS/NZS 3000. In addition to those requirements, the following applies:

(a) The installation shall be tested according to relevant standards and/or manufacturer's instructions for the equipment and the energy source.

(b) Where an export control function is used or device is installed, the settings and operation of the export limit functions shall be tested.

7.6 COMMISSIONING

After inspection and testing have been completed, the system may be commissioned by being energized, in the appropriate sequence, according to the IES shutdown and reconnection instructions.

NOTE: Approval from the electricity distributor needs to be sought before commissioning and/or final energization is completed.

The following specific tests shall be performed and recorded:

(a) Operate the main switch (inverter supply) and verify that the connection time is greater than 60 s.

(b) Isolate the main switch (mains supply) and verify that the disconnection time is less than 2 s.

COPYRIGHT

Copyright Standards New Zealand

auto login of Electrical Workers Licensing Group is licenced to temporarily download this document.
Electrical Workers Licensing Group may print this document but not more than 10% of the documents subscribed to may be held in printed form at any one time.

(c) Verify the operation of any RCDs by operating the test button where it is installed on the output of the IES.

(d) Program any protection settings required by AS/NZS 4777.2.

NOTE: Protection settings need to be programmed in accordance with appropriate local electricity distributor requirements. Export settings may also be required to be programmed.

(e) Record all protection settings.

(f) Check that the shutdown procedure is correct and results in safe shutdown of the IES.

(g) Export limit operation and export limit settings, if specified by the electricity distributor.

Copyright Standards New Zealand

auto login of Electrical Workers Licensing Group is licenced to temporarily download this document.
Electrical Workers Licensing Group may print this document but not more than 10% of the documents subscribed to may be held in printed form at any one time.

APPENDIX A

EXAMPLE SIGNS

(Informative)

A1 OVERVIEW

This Appendix provides examples of appropriate signs meeting the provisions specified in Section 6.

A2 EXAMPLE SIGNS FOR THE SWITCHBOARD TO WHICH THE INVERTER ENERGY SYSTEM (IES) IS DIRECTLY CONNECTED



NOTE: Refer to Clause 6.2(a).

FIGURE A1 TYPICAL SIGN FOR THE SWITCHBOARD TO WHICH THE IES IS CONNECTED



NOTE: Refer to Clause 6.2(b).

FIGURE A2 TYPICAL INVERTER SUPPLY SIGN FOR THE SWITCHBOARD TO WHICH THE IES IS DIRECTLY CONNECTED



NOTE: Refer to Clause 6.2(c).

FIGURE A3 TYPICAL GRID SUPPLY SIGN FOR THE MAIN SWITCHBOARD WHERE AN IES IS CONNECTED WITHIN THE INSTALLATION

NOTE: In some areas, alternate words may be used for ‘grid supply’ to indicate the mains supply or the supply from the electricity distributor; acceptable alternatives that can be used for ‘grid supply’ include ‘mains supply’ and ‘normal supply’.

COPYRIGHT

Copyright Standards New Zealand

auto login of Electrical Workers Licensing Group is licenced to temporarily download this document.
Electrical Workers Licensing Group may print this document but not more than 10% of the documents subscribed to may be held in printed form at any one time.



NOTE: Refer to Clause 6.2(d).

FIGURE A4 TYPICAL NORMAL SUPPLY SIGN FOR THE DISTRIBUTION BOARD TO WHICH THE IES IS CONNECTED

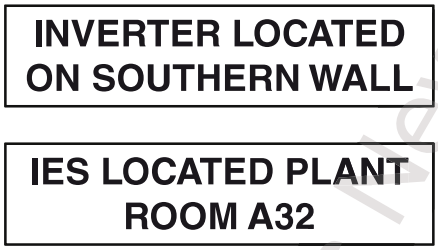

NOTE: Refer to Clause 6.2.

FIGURE A5 EXAMPLE SIGNS WHERE INVERTER OR IES IS NOT LOCATED ADJACENT TO THE SWITCHBOARD TO WHICH IT IS CONNECTED

A3 EXAMPLE SIGNS FOR OTHER SWITCHBOARDS



NOTE: Refer to Clause 6.3.

FIGURE A6 TYPICAL SIGN FOR A MAIN SWITCHBOARD OR INTERMEDIATE DISTRIBUTION SWITCHBOARDS WHEN THE IES IS CONNECTED TO A SUBSEQUENT DISTRIBUTION SWITCHBOARD

Copyright Standards New Zealand

Electrical Workers Licensing Group may print this document but not more than 10% of the documents subscribed to may be held in printed form at any one time.
auto login of Electrical Workers Licensing Group is licenced to temporarily download this document.

A4 EXAMPLE SIGN FOR INVERTER LOCATIONS

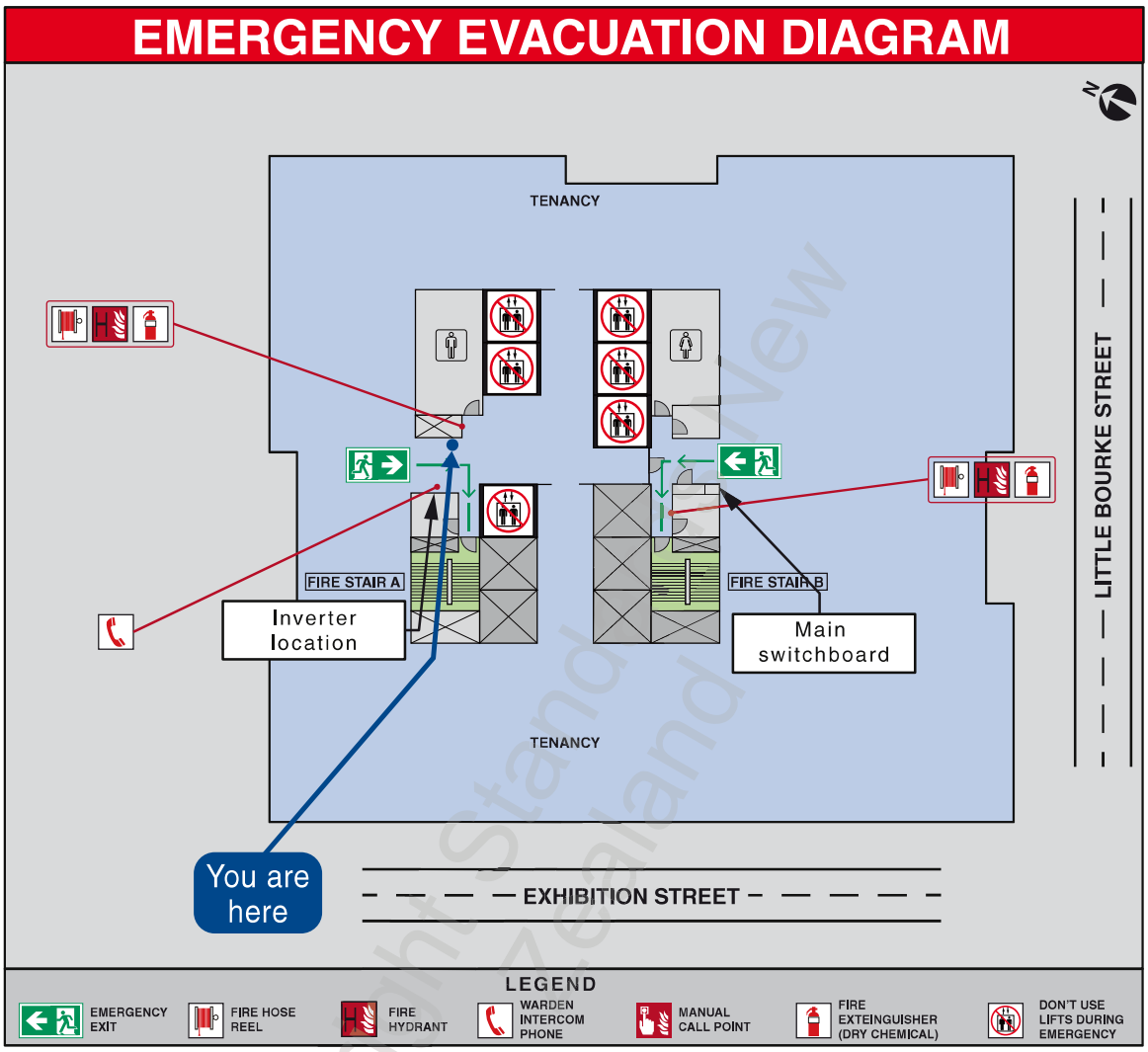

NOTES:

1 Refer to Clause 6.4.

2 When the location of the inverter is not straightforward, a site plan should be used to show the location clearly. Adjacent to fire indicator panels is an example of suitable signage placement.

FIGURE A7 EXAMPLE PLAN SHOWING INVERTER LOCATION WHEN NOT ADJACENT TO MAIN SWITCHBOARD

Electrical Workers Licensing Group is licenced to temporarily download this document.
auto login of Electrical Workers Licensing Group may print this document but not more than 10% of the documents subscribed to may be held in printed form at any one time.

Copyright Standards New Zealand

A5 EXAMPLE ENERGY SOURCE LABELLING

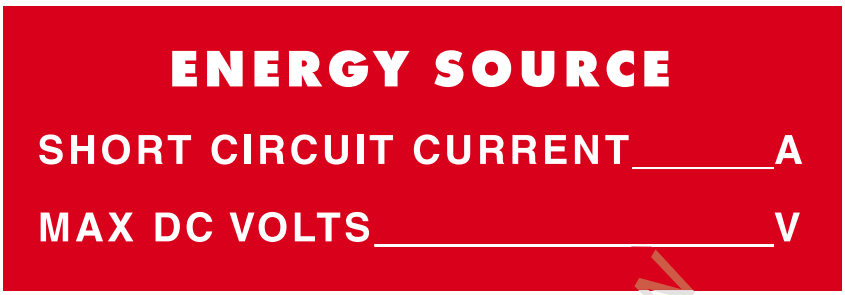

NOTE: Refer to Clause 6.5(a).

FIGURE A8 TYPICAL LABELLING OF ENERGY SOURCE LOCATED AT ISOLATION POINT

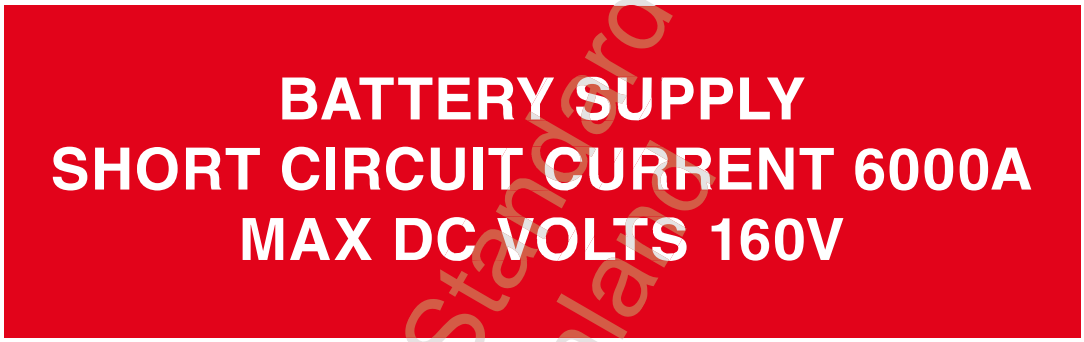

NOTE: Refer to Clause 6.5(a).

FIGURE A9 EXAMPLE BATTERY ENERGY SOURCE LABEL LOCATED ON BATTERY ENCLOSURE



NOTE: Refer to Clause 6.5(b).

FIGURE A10 EXAMPLE LABEL WHERE SPECIFIC OPERATIONAL CONSIDERATIONS FOR ISOLATION EXIST

Copyright Standards New Zealand

auto login of Electrical Workers Licensing Group is licenced to temporarily download this document.
Electrical Workers Licensing Group may print this document but not more than 10% of the documents subscribed to may be held in printed form at any one time.



NOTE: Refer to Clause 6.5(b).

FIGURE A11 EXAMPLE LABEL WHERE SPECIFIC OPERATIONAL CONSIDERATIONS FOR ISOLATION EXIST



NOTE: Refer to Clause 6.5(c).

FIGURE A12 EXAMPLE OF ENERGY STORAGE LABEL REQUIRED AT MAIN SWITCHBOARD FOR EMERGENCY WORKERS

A6 EXAMPLE DEMAND RESPONSE MODE (DRM) LABELLING



NOTES:

1 Refer to Clause 6.6.

2 The installer should indicate which functions have been enabled or connected for the IES installation. Refer to Clause 6.6.

FIGURE A13 EXAMPLE OF DEMAND RESPONSE LABELLING ON INVERTER SHOWING DRM FUNCTIONS AVAILABLE

A7 EXAMPLE SIGN FOR SHUTDOWN PROCEDURE

The typical sign shown in Figure A14 is for an IES connected to a main switchboard with the energy source being a single PV array.

COPYRIGHT

Copyright Standards New Zealand

Electrical Workers Licensing Group is licenced to temporarily download this document.
auto login of Electrical Workers Licensing Group may print this document but not more than 10% of the documents subscribed to may be held in printed form at any one time.

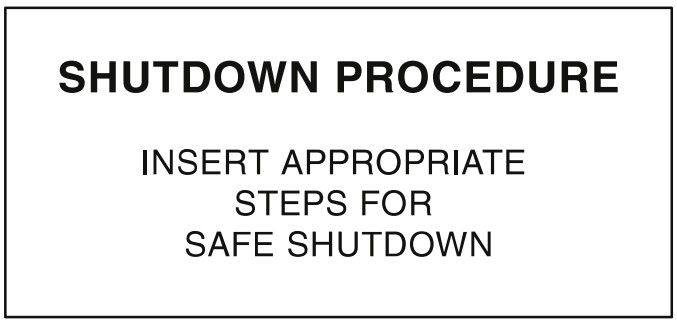

NOTE: Refer to Clause 6.7.

FIGURE A14 TYPICAL SIGN FOR IES SHUTDOWN PROCEDURE



NOTE: Refer to Clause 6.7.

FIGURE A15 EXAMPLE FIRE PANEL SIGN
INDICATING LOCATION OF IES SHUTDOWN PROCEDURES

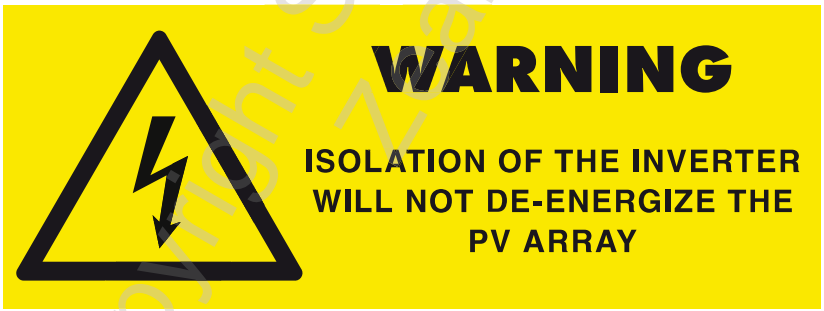

NOTE: Refer to Clause 6.7.

FIGURE A16 EXAMPLE WARNING SIGN
INDICATING ISOLATION WILL NOT
DE-ENERGIZE THE ENERGY SOURCE

Copyright Standards New Zealand

auto login of Electrical Workers Licensing Group is licenced to temporarily download this document.
Electrical Workers Licensing Group may print this document but not more than 10% of the documents subscribed to may be held in printed form at any one time.

A8 EXAMPLE SIGNS LOCATED ADJACENT TO INVERTERS

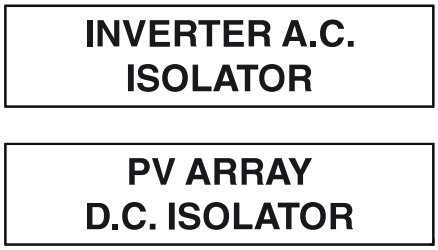

NOTE: Refer to Clause 6.8.

FIGURE A17 TYPICAL SIGNS FOR ISOLATORS ADJACENT TO AN INVERTER



NOTE: Refer to Clause 6.8(b).

FIGURE A18 LAYOUT OF SIGN FOR ENERGY SOURCE ISOLATORS

A9 EXAMPLE SIGNS FOR MULTIPLE SYSTEMS



NOTE: Refer to Clause 6.9.

FIGURE A19 EXAMPLE OF CLEAR SIGNAGE
WHERE MULTIPLE INVERTERS ARE USED

A10 EXAMPLE SIGNS FOR MULTIPLE ENERGY SOURCES



NOTE: Refer to Clause 6.10.

FIGURE A20 TYPICAL WARNING SIGN OF ISOLATION FOR MULTIPLE
ENERGY SOURCES

COPYRIGHT

Copyright Standards New Zealand

auto login of Electrical Workers Licensing Group is licenced to temporarily download this document.
Electrical Workers Licensing Group may print this document but not more than 10% of the documents subscribed to may be held in printed form at any one time.

A11 TYPICAL SIGNS FOR MULTIPLE MODE IES (INCLUDING SYSTEMS WITH STAND-ALONE FUNCTIONALITY)

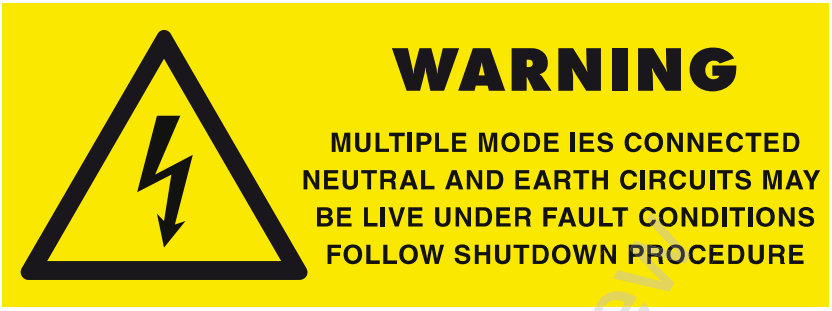

NOTE: Refer to Clause 6.11.

FIGURE A21 TYPICAL WARNING SIGN FOR MAIN SWITCHBOARD AND INTERMEDIATE DISTRIBUTION BOARDS



NOTE: Refer to Clause 6.11.

FIGURE A22 TYPICAL SIGN FOR MAIN SWITCH OF STAND-ALONE PORT

Copyright Standards New Zealand

auto login of Electrical Workers Licensing Group is licenced to temporarily download this document.
Electrical Workers Licensing Group may print this document but not more than 10% of the documents subscribed to may be held in printed form at any one time.

APPENDIX B

DESIGN NOTES—MULTIPLE MODE INVERTER ENERGY SYSTEM WITH STAND-ALONE PORT AND ALTERNATE SUPPLY STAND-ALONE DISTRIBUTION SWITCHBOARD

(Informative)

B1 NORMAL OPERATION

The provision of alternative (or stand-alone) supply when the grid-connected inverter is required to disconnect from the grid requires the use of a multiple mode inverter that is capable of operating in a stand-alone mode. There are multiple ways of providing a safe installation with these systems. The stand-alone port (or functionality) is used to provide the electrical installation with an alternative supply. It is possible to use a separate port for the stand-alone functionality or to use a single port with both grid-interactive and stand-alone functionality. The arrangement of the alternative supply installation is detailed in AS/NZS 3000.

The multiple mode inverter could be capable of supplying a dedicated stand-alone distribution system or the entire electrical installation. Manufacturer instructions for installation and operation of these multiple mode inverters with alternative (stand-alone) supply functionalities need to be followed.

Caution is required when the alternative (stand-alone) supply distribution switchboard is connected, because the earthing and neutral connections will be dependent on the multiple mode inverter. Attention is drawn to the alternative supply provisions for electrical installations detailed in AS/NZS 3000.

B2 OVERCURRENT FAULT CONDITIONS

The multiple mode inverter stand-alone port may only have limited output power capacity and in the event of overcurrent fault condition, the alternative (or stand-alone) supply distribution switchboard overcurrent protective devices should be selected to be rated to be able to only supply the normal operating current of the loading connected. This may provide some discrimination between protective devices as required by AS/NZS 3000.

In some severe fault conditions, the electronic overload facility in the inverter may operate very quickly and result in the total stand-alone power supply failure before the provided overcurrent device operates. Consideration of the design of overcurrent discrimination should minimize the impact on the reliability of supply.

If earth leakage conditions occur, the RCD (if fitted) will be able to disconnect the faulty equipment before total supply failure occurs. This will, in general, not produce overcurrent conditions that will exceed the available output power of the stand-alone port of the multiple mode inverters and cause a loss of a.c. power supply.

Copyright Standards New Zealand

auto login of Electrical Workers Licensing Group is licenced to temporarily download this document.
Electrical Workers Licensing Group may print this document but not more than 10% of the documents subscribed to may be held in printed form at any one time.

APPENDIX C

DESIGN CONSIDERATIONS

(Informative)

auto login of Electrical Workers Licensing Group is licenced to temporarily download this document.
Electrical Workers Licensing Group may print this document but not more than 10% of the documents subscribed to may be held in printed form at any one time.

C1 GENERAL

This Appendix is not intended as a complete design guide for inverter energy systems (IES), however, it provides an overview of key issues that should be considered when designing such a system.

A key aspect of any good system installation is the preparation of a detailed design. In preparing an IES design, each site should be visited to determine the conditions specific to the site that will affect the design of the system. The type of information that needs to be gathered at the site will be related to aspects of system design that will assist with optimizing the installation of the system, as well as ensuring successful installation and ongoing operation.

The detail required and the amount of customization needed for the design will also depend on the intended size of the system. A small 1 kVA single-phase IES with a PV array may need minimal customization, however, a 100 kVA IES using multiple inverters and PV arrays mounted across several buildings will need extensive customization of the design to suit the application. Ultimately issues relating to the intended application and the consumer's requirements will determine the type and size of system required.

Appendix E discusses earthing considerations for design of an IES.

C2 ASSESSING THE CONSUMER INSTALLATION

C2.1 Site visit

A site visit prior to the actual installation of the IES should be done to determine—

(a) the energy source availability on-site (if renewable energy sources are included);

(b) the intended equipment location, e.g. of the inverter and the energy source equipment;

(c) access for installation and maintenance;

(d) the point of supply and the main switchboard;

(e) switchboard and wiring upgrade requirements; and

(f) existing electrical loads and current energy usage.

C2.2 Assessing the site for the energy source installation

The on-site assessment should assess the suitability of the chosen location for any renewable energy source or suitable siting for any energy storage device. This will include the assessment of any structure that the energy source will be attached to for structural strength, development of correct installation instructions for the site and correct installation hardware.

The assessment will also provide an indication of whether the local environment will affect the output and installation of the energy source, e.g. for PV arrays this would include assessment of potential for shading; for wind turbines, whether any natural or manmade structure could obstruct the prevailing winds; and for energy storage, suitable siting with adequate ventilation and weight bearing.

Copyright Standards New Zealand

COPYRIGHT

C2.3 Assessing the site for inverter location

The selection of the inverter location will be affected by many factors that relate both to the point of supply for the installation and the selected site for the energy source.

Once the inverter location has been chosen, the best IES connection point to the customer installation needs to be chosen. The main switchboard or distribution switchboard to which the IES will be connected is required to be rated to at least the rated current of the IES. The potential for voltage rise and voltage unbalance at the chosen IES connection point (refer to Paragraphs C3 and C4) will need to be considered to check suitability and whether additional upgrading is required. The general state of the switchboard installation and wiring needs to be assessed. This should include whether it meets current standards, has adequate room for additional equipment and cables and is in safe and good condition.

The cable for connection from the IES to the IES connection point will need to be selected, taking into consideration the voltage rise, cable route and mechanical protection requirements.

The mounting of inverters needs to consider the weight of the inverter as well as the structural strength of the selected location. The designer needs to ensure that appropriate fixing materials are used. The location will need to be assessed for appropriate access to the inverter and need for protection from environment and from unauthorized access in some situations.

An inverter is an electronic device and will have a defined operating temperature range. A suitable location needs to be selected. This should be out of the sunlight with consideration to maximize natural convection cooling. In some cases, for larger installations, forced cooling and a purpose-built enclosure may be required.

C2.4 Assessing point of supply, main switchboard and tariff implications of connecting an IES

The point of supply for the consumer will be as defined by the local electricity distributor's service rules/regulations or state/territory requirements. Typically, most consumers will be connected by a standard supply, which may be single-phase or three-phase and may be rated between 30 A and 100 A. In industrial and commercial premises, other supply arrangements may be present and these will need to be checked and confirmed.

It is important to establish the capacity of the connection service available to the consumer. The supply capacity available can be different for the export of power to that available for the import of power and could be dependent upon any one of the following—

(a) an individual agreement with the consumer;

(b) a gazetted 'deemed contract';

(c) a tariff dependent contract demand;

(d) the size of the smallest electrical asset used to provide the supply;

(e) regulation; or

(f) a commercial limitation imposed by the retailer.

These factors are important commercial considerations and do not include other limitations imposed by government agencies or regulations associated with feed in tariffs, or technical requirements.

NOTE: In some states, the installation of an IES will result in the loss of special tariffs for off-peak loads or the ability of the consumer to select a time of use tariff. These tariff changes could involve the addition of contactors to control those loads previously controlled by the electricity distributor and will require additional space on the switchboard to be made available.

auto login of Electrical Workers Licensing Group is licenced to temporarily download this document.
Electrical Workers Licensing Group may print this document but not more than 10% of the documents subscribed to may be held in printed form at any one time.

Copyright Standards New Zealand

An assessment of the consumer mains is required to ensure that the 2% voltage rise requirements of Clause 3.3.3 are able to be met with the intended IES rating.

Different locations on the electricity distributor's grid will have varying loads and supply conditions, and with larger IES systems, it may be necessary to monitor the load and voltage at the main switchboard to correctly size the IES for the consumer. Information on voltage drop is given in the AS/NZS 3008.1 series. An alternative measurement method would be to perform a loop impedance test at the IES connection point. AS/NZS 3017 provides suitable test methods.

The general state of the main switchboard installation and wiring will need to be assessed as to whether it meets current standards, has adequate room for additional equipment and cables, and is in safe and good condition. Consideration of the cable route and access is also required.

C2.5 Assessing site load and current energy use

The site load and current energy use will potentially affect the size and type of system required.

Generally it can be assumed that sizing an IES larger than the existing site load or energy use is likely to require additional work and costs to upgrade switchboards and possibly even the local grid.

Different electricity distributors have different requirements for when a detailed assessment of the grid is required to determine the hosting capacity for embedded generation.

C3 VOLTAGE RISE—ISSUES

C3.1 Maximum allowed voltage rise

In Australia, there are a number of different nominal voltage ranges for low voltage grids, depending on the state or territory, although all fall broadly within the IEC 60038 nominal range of 230 V ±10%. The two common Australian ranges are 230 V (–6%, +10%) and 240 V (±6%). Despite differing nominal voltage ranges, the average grid voltage in each jurisdiction normally lies between 240 V and 250 V.

In New Zealand, the nominal voltage range of 230 V (±6%) also falls within the IEC 60038 230 V nominal range.

In Australia, AS 60038 defines the utilization voltage range for equipment used in Australia. Voltages exceeding the maximum utilization voltage have the potential to damage equipment.

AS 61000.3.100 defines and describes the compliance limits of the steady state supply voltage variation in Australian public electricity systems at the grid point of supply to the customer.

The voltage levels on the grid to which consumer installations are connected will vary and fluctuate throughout the day. This variation is dependent on the load that is on the whole grid as well as the local low voltage grid. Generally, when the load increases, the voltage decreases and when the load decreases, the voltage increases. The control of these voltage levels is planned at the design stage and then managed in real-time by automatic controllers. Voltage regulation is either managed at zone substations or via medium voltage feeder regulators, which are often quite some distance from the consumer. Due to the remoteness of the voltage control equipment and the highly variable nature of consumer load and embedded generation, low voltage (LV) regulation can vary considerably and in some cases exceed 12% over the course of a day.

Electrical Workers Licensing Group may print this document but not more than 10% of the documents subscribed to may be held in printed form at any one time.
auto login of Electrical Workers Licensing Group is licenced to temporarily download this document.

Copyright Standards New Zealand

Typically in Australia the voltage at the start of the LV grid is set to approximately 250 V to cater for load variations, and to remain within the required voltage range for the state or territory throughout the grid. Further to the voltage variations on the low voltage grid there will also be voltage variations associated with the consumer installation. In AS/NZS 3000, up to 5% voltage drop is allowed across the installation to the consumer's load terminals. This approach works well with the presence of load only, but with the advent of embedded generation and IES, it has become more difficult to manage the voltage within the required ranges.

In a number of situations, the combination of grid voltages and voltage rises along cables and conductors has caused IES to disconnect when they are producing more energy than is being used within the consumer installation. Where there are several PV array IES, at various sites within a LV grid, they operate with little diversity, so all systems will be producing maximum output at similar times, thereby affecting the whole LV grid. In residential situations, this occurs generally in the middle of the day when typically the load is lightest and PV generation is highest. By the time the load is increasing at night, the PV array IES provides no support to the peak load.

To improve the performance of these systems and to coordinate operation better with grid voltage management methods, this edition of the Standard introduces a maximum allowed voltage rise from the IES to the point of supply for the consumer installation (Clause 3.3.3). Figure C1 shows the application of the voltage rise provisions in a typical installation. The introduction of this maximum is to reduce the likelihood of excessive voltages within the consumer's installation. It also helps reduce the occurrence of overvoltage protection trips on the inverter due to consumer installation voltage rises.

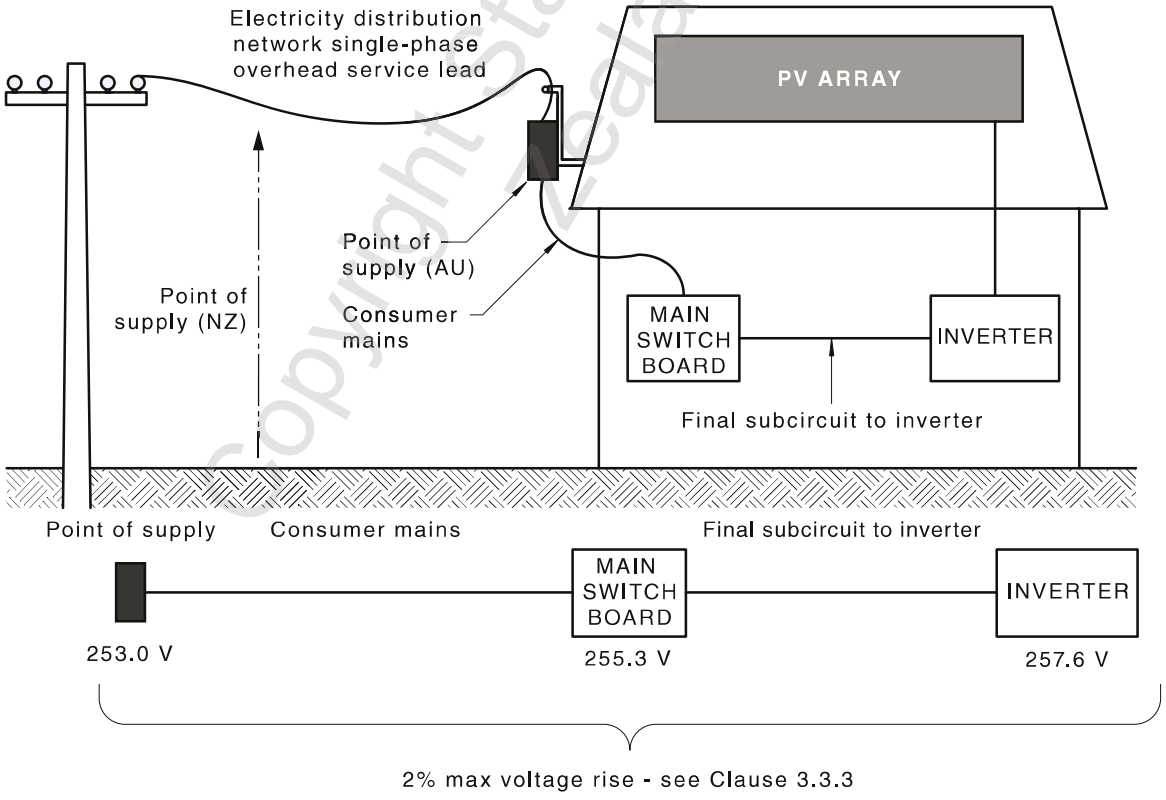

FIGURE C1 EXAMPLE OF APPLICATION OF VOLTAGE RISE FOR IES BASED ON NEW REQUIREMENTS WITH UPPER VOLTAGE LIMIT AT POINT OF SUPPLY

COPYRIGHT

Copyright Standards New Zealand

auto login of Electrical Workers Licensing Group is licenced to temporarily download this document.
Electrical Workers Licensing Group may print this document but not more than 10% of the documents subscribed to may be held in printed form at any one time.

In addition to the voltage rise requirements of Clause 3.3.3, the introduction of the balanced output power for systems over 5 kVA output will assist in maintaining electrical installation voltage levels below the upper voltage range.

The introduction of the output balance and voltage rise requirements will assist in reducing the occurrence of overvoltage disconnections in consumer installations. Limiting the voltage rise achieves two objectives: to reduce the system energy loss before the meter and to reduce the likelihood that the IES might disconnect due to an overvoltage situation.

To assist with the introduction of the voltage rise requirements, several worked examples are shown in Paragraphs C3.2 to C3.4. The worked examples show typical installations and the selection of cables based on the calculation of voltage rises from the inverters through to the point of supply. The worked examples are in accordance with this Standard, meeting the required total 2% voltage rise from the point of supply to the inverter.

For the purposes of all calculations, nominal voltages of 230 V/400 V are used.

NOTES:

1 The worked examples do not address the requirements for overcurrent protection specified in this Standard.

2 In Australia, AS/NZS 3008.1.1 permits various methods for determining voltage drop. The method used in the following examples is based on determination of voltage drop from the millivolts per ampere metre method in AS/NZS 3008.1.1.

3 The following example calculations use AS/NZS 3008.1.1 for the current ratings. In New Zealand, use of AS/NZS 3008.1.2 is required.

4 In New Zealand, use of AS/NZS 3008.1.2 will give slightly higher current ratings for cables due to lower ambient conditions.

C3.2 Example 1—Single-phase overhead grid connection with a single-phase 4 kVA inverter system

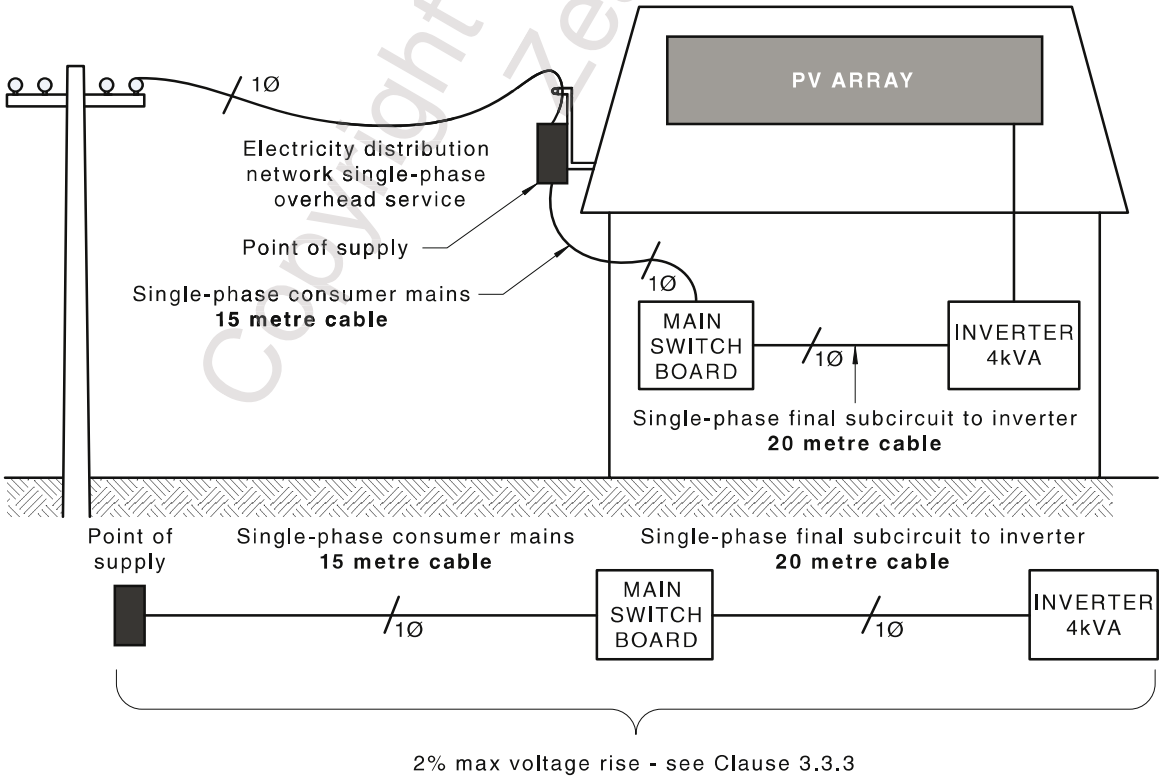

FIGURE C2 SINGLE-PHASE OVERHEAD GRID CONNECTION WITH SINGLE-PHASE 4 kVA INVERTER SYSTEM

COPYRIGHT

Copyright Standards New Zealand

Electrical Workers Licensing Group is licenced to temporarily download this document.
auto login of Electrical Workers Licensing Group may print this document but not more than 10% of the documents subscribed to may be held in printed form at any one time.

This example is for an installation with a single phase supply, a 15 metre consumer mains length, a 20 metre final subcircuit length to the inverter and only a single main switchboard for connections. It is necessary to select suitable cable sizes for the complete installation based on requirements for current-carrying capacity and voltage rise. For this example, two segments are considered: the consumer mains (existing installation) and the final subcircuit to the inverter (new IES installation). Refer to Figure C2.

Current-carrying capacity requirement:

The required minimum current-carrying capacity for cables in the installation is determined based on the rated current of the inverters. The 4 kVA inverter equates to a potential rated current of 17.4 A, i.e. $\left(\frac{4000}{230\,V} = 17.4A\right)$.

Consumer mains cable size:

A 10 mm^2 conductor size is selected to satisfy the minimum size requirement of the electricity distributor's service rules.

NOTES:

1 The cable may already be installed, so inspection of the existing cable is needed to determine the size.

2 Minimum size of consumer mains may vary depending on the local electricity distributor's service and installation requirements.

A 10 mm^2 conductor size has a current-carrying capacity of 52 A. This rating is based on a two-core sheathed thermoplastic copper cable enclosed within a wiring enclosure in air, as per AS/NZS 3008.1.1:2009, Table 10, Column 11. As such, the cable is capable of carrying the rated current of the inverter.

Final subcircuit to inverter cable size:

A 4 mm^2 conductor size, which has a current-carrying capacity of 30 A, is selected to satisfy coordination. This rating is based on a two-core sheathed thermoplastic copper cable enclosed within a wiring enclosure in air, as per AS/NZS 3008.1.1:2009, Table 10, Column 11. As such, the cable is capable of carrying the rated current of the inverter.

2% voltage rise requirement:

Once the cable is selected for current-carrying capacity, it is necessary to confirm that the requirements of Clause 3.3.3 are met for each segment of cable considered. The voltage rise for the installation is 2% (refer to Clause 3.3.3) in this case, this consists of only the consumer mains and the final subcircuit to the inverter. For a nominal voltage of 230 V, the maximum single-phase voltage rise ($V_{d1Ø}$) is 4.6 V.

The total maximum voltage rise is as follows:

V_d total = $V_{d1Ø}$ consumer mains + $V_{d1Ø}$ final subcircuit to inverter

where

$V_{d1Ø}$ consumer mains = the single-phase voltage rise in the consumer mains, in volts

$V_{d1Ø}$ final subcircuit to inverter = the single-phase voltage rise in the final subcircuit to inverter, in volts

Copyright Standards New Zealand

auto login of Electrical Workers Licensing Group is licenced to temporarily download this document.
Electrical Workers Licensing Group may print this document but not more than 10% of the documents subscribed to may be held in printed form at any one time.

Consumer mains voltage rise:

$$V_c = 1000 \times V_{d3\varnothing}/(L \times I)$$

where

V_c = the three-phase millivolt rise per ampere-metre route length of circuit

L = route length of consumer mains, 15 m

I = current-carrying capacity, 17.4 A

$V_{d3\varnothing}$ = three-phase voltage rise (V) value = 0.866 × single-phase voltage rise (V) value = $V_{d1\varnothing} \times 0.866$

The simple guide for evaluating the V_c consumer mains (consumer mains voltage rise) is to use half the total $V_{d1\varnothing}$ as follows:

$$V_c = \frac{(1000 \times 2.3 \times 0.866)}{(15 \times 17.4)} = 7.63\,\text{mV/A.m}$$

For a 10 mm^2 conductor size based on a normal operating temperature of 75°C, the V_c = 3.86 mV/A.m, as per AS/NZS 3008.1.1:2009, Table 42, Column 6. This value is less than the value calculated and satisfies the voltage rise requirement.

The actual voltage drop on the consumer mains is therefore—

$$V_{d1\varnothing} = \left(\frac{3.86}{0.866 \times 1000}\right) \times 17.4 \times 15 = 1.16\ \text{V}$$

The cable size for the consumer mains is 10 mm^2. In this situation, no change is required to the consumer mains as it meets the requirements for voltage rise in Clause 3.3.3.

Final subcircuit to inverter voltage rise:

For the final subcircuit to the inverter, the remaining $V_{d1\varnothing}$ is equal to (4.6 V–1.16 V = 3.44 V).

The V_c for the final subcircuit to inverter voltage rise is as follows:

$$V_c = 1000 \times V_{d3\varnothing}/(L \times I) = \frac{(1000 \times 3.44 \times 0.866)}{(20 \times 17.4)} = 8.56\ \text{mV/A.m}$$

where

L = route length final subcircuit to inverter, 20 m

I = current-carrying capacity, 17.4 A

For a 4 mm^2 conductor size based on a normal operating temperature of 75°C, the V_c = 9.71 mV/A.m as per AS/NZS 3008.1.1:2009, Table 42, Column 6. This value is greater than the calculated value.

A 4 mm^2 conductor size is not suitable and a new conductor size is required to be selected. A 6 mm^2 conductor size based on a normal operating temperature of 75°C satisfies the voltage rise requirement, where V_c = 6.49 mV/A.m, as per AS/NZS 3008.1.1:2009, Table 42, Column 6.

NOTE: The design needs to be checked to ensure that the overcurrent protection and discrimination requirements are met for the changed cable size.

The actual voltage rise on the final subcircuit to inverter is therefore—

$$V_{d1\varnothing} = \left(\frac{6.49}{1000 \times 0.866}\right) \times 17.4 \times 20 = 2.61\,\text{V}$$

COPYRIGHT

Copyright Standards New Zealand

auto login of Electrical Workers Licensing Group is licenced to temporarily download this document.
Electrical Workers Licensing Group may print this document but not more than 10% of the documents subscribed to may be held in printed form at any one time.

The total voltage rise from the point of supply to the inverter is as follows:

V_d total = $V_{d1Ø}$ consumer mains + $V_{d1Ø}$ final subcircuit to inverter

V_d total = 1.16 + 2.61 = 3.77 V

This is below the required limit of 4.6 V.

C3.3 Example 2—Three-phase connection with 5 kVA three-phase inverter system

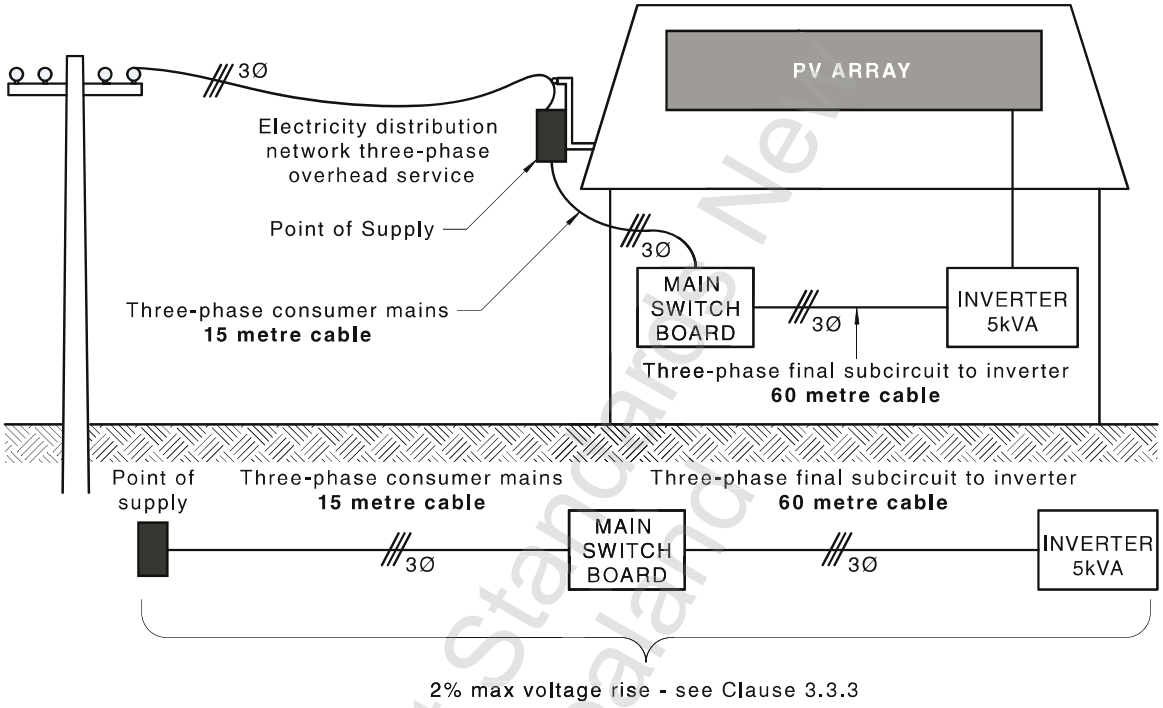

FIGURE C3 THREE-PHASE OVERHEAD GRID CONNECTION WITH THREE-PHASE 5 kVA INVERTER SYSTEM (NO LOAD)

This example is for an installation with a three-phase supply, a 15 metre consumer mains length, a 60 metre final subcircuit length to the three-phase inverter and only the main switchboard for connections. It is necessary to select suitable cable sizes for the complete installation based on requirements for current-carrying capacity and voltage rise. For this example, two segments are considered: the consumer mains (existing installation) and the final subcircuit to the inverter (new IES installation). Refer to Figure C3.

Current-carrying capacity requirement:

The required minimum current-carrying capacity for cables in the installation is determined based on the rated current of the inverters. The 5 kVA inverter equates to a potential rated current of 7.23 A load per phase, i.e. $\left(\frac{5000}{1.73\times 400\,\text{V}} = 7.23\ \text{A}\right)$.

Consumer mains cable size:

A 6 mm^2 copper conductor size is selected to satisfy the minimum size requirement of the electricity distributor's service rules.

NOTES:

1 The cable may already be installed so inspection of the existing cable is needed to determine the size.

2 Minimum size of consumer mains may vary depending on the local electricity distributor's service and installation requirements.

COPYRIGHT

Copyright Standards New Zealand

auto login of Electrical Workers Licensing Group is licenced to temporarily download this document.
Electrical Workers Licensing Group may print this document but not more than 10% of the documents subscribed to may be held in printed form at any one time.

A 6 mm^2 conductor size has a current-carrying capacity of 33 A. This rating is based on a four-core sheathed thermoplastic copper cable enclosed within a wiring enclosure in air, as per AS/NZS 3008.1.1:2009, Table 13, Column 11. As such the cable is capable of carrying the rated current of the inverter.

Final subcircuit to inverter cable size:

A 1 mm^2 conductor size, which has a current-carrying capacity of 11 A, is selected to satisfy coordination. This rating is based on a four-core sheathed thermoplastic copper cable enclosed within a wiring enclosure in air, as per AS/NZS 3008.1.1:2009, Table 13, Column 11.

2% voltage rise requirement:

Once the cable is selected for current-carrying capacity, it is necessary to confirm that the requirements of Clause 3.3.3 are met for each segment of cable considered. The voltage rise requirement for an IES installation is 2%. In this case, this consists of the consumer mains and the final subcircuit to the inverter. The connection is three-phase for the consumer installation and the inverter is also a three-phase installation, so calculations need to consider the three-phase voltage rise. For a nominal voltage of 400 V, the maximum recommended three-phase voltage rise ($V_{d3Ø}$) is 8.0 V.

Maximum voltage rise in the consumer mains and final subcircuit to inverter is as follows:

V_d total = $V_{d3Ø}$ consumer mains + $V_{d3Ø}$ final subcircuit to inverter

V_d total = 2% × 400 V = 8 V

Consumer mains voltage rise:

A simple guide for evaluating the V_c (consumer mains voltage rise) is to use half the total V_d total as follows:

$$V_c = \frac{(1000V_d)}{L \times I} = \frac{(1000 \times 4)}{15 \times 7.23} = 36.88\,\text{mV/A.m}$$

where

V_c = the three-phase millivolt drop per ampere-metre route length of circuit

L = route length of consumer mains, 15 m

I = current-carrying capacity, 7.23 A

V_d = three-phase voltage rise (V) value, 4 V

For a 6 mm^2 conductor size based on a normal operating temperature of 75°C, V_c = 6.49 mV/A.m as per AS/NZS 3008.1.1:2009, Table 42, Column 6. This value is less than the value calculated.

The actual voltage rise on the consumer mains is therefore—

$$V_d = \frac{L \times I \times V_c}{1000} = \frac{15 \times 7.23 \times 6.49}{1000} = 0.7\,\text{V}$$

Final subcircuit to inverter voltage rise:

For the final subcircuit to the inverter, the remaining $V_{d3Ø}$ final subcircuit to inverter is equal to (8 V–0.7 V = 7.3 V).

$$V_c = \frac{1000V_d}{L \times I} = \frac{1000 \times 7.3}{60 \times 7.23} = 16.83\,\text{mV/A.m}$$

auto login of Electrical Workers Licensing Group is licenced to temporarily download this document.
Electrical Workers Licensing Group may print this document but not more than 10% of the documents subscribed to may be held in printed form at any one time.

Copyright Standards New Zealand

auto login of Electrical Workers Licensing Group is licenced to temporarily download this document.
Electrical Workers Licensing Group may print this document but not more than 10% of the documents subscribed to may be held in printed form at any one time.

where

V_c = the three-phase millivolt drop per ampere-metre route length of circuit

L = route length of consumer mains, 60 m

I = current-carrying capacity, 7.23 A

V_d = three-phase voltage rise (V) value, $V_{d3Ø}$ final subcircuit to inverter

For a 1 mm^2 conductor size based on a normal operating temperature of 75°C, the V_c = 44.7 mV/A.m as per AS/NZS 3008.1.1:2009, Table 42, Column 6. This value is greater than the maximum recommended value calculated and does not satisfy the voltage rise recommendation. A new conductor size needs to be selected. A 2.5 mm^2 conductor size based on a normal operating temperature of 75°C satisfies the voltage rise recommendation, where V_c = 15.6 mV/A.m, as per AS/NZS 3008.1.1:2009, Table 42, Column 6.

NOTE: The design needs to be checked to ensure that the overcurrent protection and discrimination requirements are met for the changed cable size.

The actual voltage rise on the final subcircuit to inverter using the required 2.5 mm^2 is therefore—

$$V_d = \frac{L \times I \times V_c}{1000} = \frac{60 \times 7.23 \times 15.6}{1000} = 6.77\,\text{V}$$

The total voltage rise from the inverter to the point of supply is as follows:

V_d total = $V_{d3Ø}$ consumer mains + $V_{d3Ø}$ final subcircuit to inverter

V_d total = 0.7 + 6.77 = 7.47 V

This is below the required limit.

C3.4 Example 3—Three-phase connection with 30 kVA three-phase inverter system

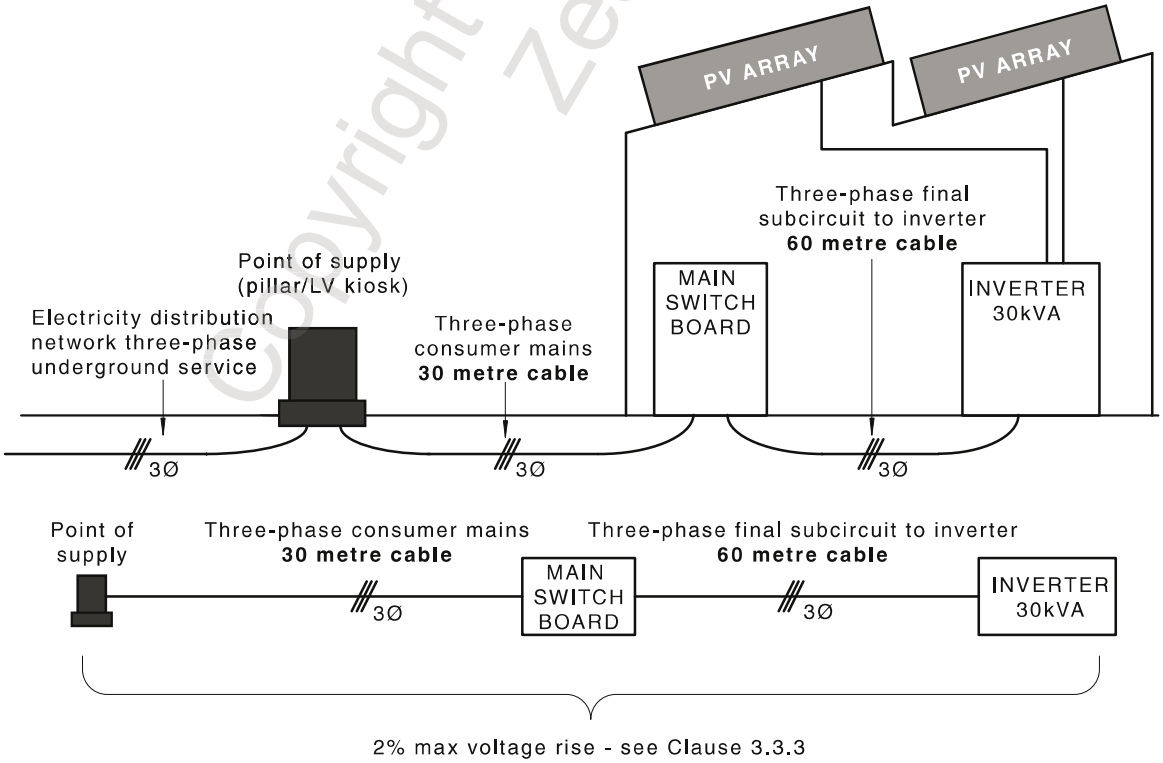

FIGURE C4 THREE-PHASE UNDERGROUND NETWORK CONNECTION WITH THREE-PHASE 30 kVA INVERTER SYSTEM (NO LOAD)

Copyright Standards New Zealand

This example is for an installation with a three-phase supply, a 30 metre consumer mains length, a 60 metre final subcircuit length to the three-phase inverter and only the main switchboard for connections. It is necessary to select suitable cable sizes for the complete installation based on requirements for current-carrying capacity and voltage rise. For this example, two segments are considered: the consumer mains (existing installation) and the final subcircuit to the inverter (new IES installation). Refer to Figure C4.

Current-carrying capacity requirement:

The required minimum current-carrying capacity for cables in the installation is determined based on the rated current of the inverters. The three-phase 30 kVA equates to 43.35 A load per phase, i.e. $\left(\frac{30\,000}{1.73\times 400\text{V}} = 43.35\text{ A}\right)$.

Consumer mains cable size:

A 6 mm^2 conductor size is selected to satisfy the minimum size requirement of the electricity distributor's service rules.

NOTES:

1 The cable may already be installed so inspection of the existing cable is needed to determine the size.

2 Minimum size of consumer mains may vary depending on the local electricity distributor's service and installation requirements.

A 6 mm^2 conductor size has a current-carrying capacity of 45 A. This rating is based on three single-core thermoplastic copper cables enclosed within an underground wiring enclosure, as per AS/NZS 3008.1.1:2009, Table 7, Column 24.

Final subcircuit to inverter cable size:

A 6 mm^2 conductor size, which has a current-carrying capacity of 45 A is selected to satisfy coordination. This rating is based on three single-core thermoplastic copper cables enclosed within an underground wiring enclosure, as per AS/NZS 3008.1.1:2009, Table 7, Column 24.

2% voltage rise requirement:

Once the cable is selected for current-carrying capacity, it is necessary to confirm that the requirements of Clause 3.3.3 are met for each segment of cable considered. The voltage rise for an IES installation is 2% (refer to Clause 3.3.3). In this case, this consists of the consumer mains and the final subcircuit to the inverter. The connection is three-phase for the consumer installation and the inverter is also a three-phase installation, so calculations need to consider the three-phase voltage rise. For a nominal voltage of 400 V, the maximum recommended three-phase voltage rise ($V_{d3Ø}$) is 8.0 V.

The maximum voltage rise in the final subcircuit to inverter and consumer mains is as follows:

V_d total = $V_{d3Ø}$ consumer mains + $V_{d3Ø}$ final subcircuit to inverter

V_d total = 2% × 400 V = 8 V

Consumer mains voltage rise:

A simple guide for evaluating the V_c (consumer mains voltage rise) is to use half the total V_d total as follows:

$$V_c = \frac{1000\,V_{d3Ø}}{L\times I} = \frac{1000\times 4}{30\times 43.35} = 3.08\text{ mV/A.m}$$

COPYRIGHT

auto login of Electrical Workers Licensing Group is licenced to temporarily download this document.
Electrical Workers Licensing Group may print this document but not more than 10% of the documents subscribed to may be held in printed form at any one time.

Copyright Standards New Zealand

where

V_c = the three-phase millivolt rise per ampere-metre route length of circuit

L = route length of consumer's mains, 30 m

I = current-carrying capacity, 43.35 A

$V_{d3Ø}$ = three-phase voltage rise (V) value, 4 V

A 6 mm^2 conductor size is not suitable. A new conductor size needs to be selected. A 16 mm^2 conductor size based on a normal operating temperature of 75°C satisfies the voltage rise recommendation, where V_c = 2.43 mV/A.m, as per AS/NZS 3008.1.1:2009, Table 41, Column 6.

NOTE: Designs need to be checked to ensure that the overcurrent protection and discrimination requirements are met for the changed cable size.

The actual voltage rise on the consumer mains is therefore—

$$V_d = \frac{L \times I \times V_c}{1000} = \frac{30 \times 43.35 \times 2.43}{1000} = 3.16 \text{ V}$$

The cable size for the consumer mains and submains is 6 mm^2 and needs to be changed to 16 mm^2 conductor size to meet the requirements for voltage rise in Clause 3.3.3.

Final subcircuit to inverter voltage rise:

For the final subcircuit to the inverter the remaining $V_{d3Ø}$ final subcircuit to inverter is equal to (8 V–3.16 V = 4.84 V).

$$V_c = \frac{1000 V_d}{L \times I} = \frac{1000 \times 4.84}{60 \times 43.35} = 1.86 \text{ mV/A.m}$$

where

V_c = the three-phase millivolt rise per ampere-metre route length of circuit

L = route length of consumer mains, 60 m

I = current-carrying capacity, 43.35 A

$V_{d3Ø}$ = three-phase voltage rise (V) value, 4.84 V

For a 6 mm^2 conductor size based on a normal operating temperature of 75°C, V_c = 6.49 mV/A.m, as per AS/NZS 3008.1.1:2009, Table 41, Column 6. This value is greater than the maximum value calculated and does not satisfy the voltage rise requirement. A new conductor size needs to be selected. A 25 mm^2 conductor size based on a normal operating temperature of 75°C satisfies the voltage rise requirement, where V_c = 1.55 mV/A.m, as per AS/NZS 3008.1.1:2009, Table 41, Column 6.

NOTE: Designs need to be checked to ensure that the overcurrent protection and discrimination requirements are met for the changed cable size in designs.

The actual voltage rise on the final subcircuit to the inverter using the required 25 mm^2 is therefore—

$$V_d = \frac{L \times I \times V_c}{1000} = \frac{60 \times 43.35 \times 1.55}{1000} = 4.03 \text{ V}$$

The total voltage rise from the inverter to the point of supply is as follows:

V_d total = V_{d3O} consumer mains + V_{d3O} final subcircuit to inverter

V_d total = 3.16 + 4.03 = 7.19 V

This meets the required limit.

COPYRIGHT

Copyright Standards New Zealand

Electrical Workers Licensing Group may print this document but not more than 10% of the documents subscribed to may be held in printed form at any one time.
auto login of Electrical Workers Licensing Group is licenced to temporarily download this document.

C4 PHASE BALANCE—ISSUES

The balancing of load and generation systems across all phases of a multiphase grid improves the grid quality of supply that can be delivered to customers. State regulators define allowable limits for customers and grid operators. Consideration of balancing the IES outputs evenly across the available phases required by this Standard will improve the voltage rise as described in Paragraph C3 and, in particular, assist the customer to meet their obligations.

Some electricity distributors will require phase balance protection to be provided for larger systems.

The voltage unbalance factor (VUF) is calculated from the negative phase sequence and positive phase sequence components of the voltage at the point of connection with the electricity distributor or at the point where the IES connects into the consumer installation. Equation C1 shows the definition of VUF:

$$\text{VUF} = \frac{V_2}{V_1} \times 100\% \qquad \ldots \text{C1}$$

where

VUF= the voltage unbalance factor

V_1 = the positive sequence voltage

V_2 = the negative sequence voltage

The measurement and calculation of these phase sequence voltages may require special instruments or advanced calculations. An approximation can be used to quickly estimate whether an issue is present and Equation C2 provides the estimation calculation method:

$$\text{VUF} = \frac{Max\,\Delta V}{Avg.V} \times 100\,\% \qquad \ldots \text{C2}$$

where

$Max\Delta V$ = the maximum difference between any of the three-phase-to-phase voltage values and the $Avg.V$

$Avg.V$ = the average of the three-phase-to-phase voltage values

NOTE: For the estimation method, the phase-to-phase voltage values or measurements need to be used as the phase-to-neutral values times √3 will be incorrect due to the unknown phase angles between voltages.

Copyright Standards New Zealand

Electrical Workers Licensing Group is licenced to temporarily download this document. auto login of Electrical Workers Licensing Group may print this document but not more than 10% of the documents subscribed to may be held in printed form at any one time.

APPENDIX D

ADDITIONAL RECOMMENDATIONS FOR PERIODIC VERIFICATION AND MAINTENANCE

(Informative)

The failure of a generation system is often not as evident as the failure of an electrical appliance. As the operation of a generation system has the potential to create a hazardous situation and is also a financial issue, any failure will impact the return on investment and potentially the health and safety of personnel.

A maintenance contract with a suitably qualified electrical worker or company is a basic necessity to ensure the continued safety and reliability of supply and is recommended. Anyone operating the inverter energy system (IES) needs to—

(a) be competent; and

(b) have adequate knowledge and training in—

  (i) the particular equipment and system; and

  (ii) the a.c. and d.c. isolation procedures.

Maintenance also needs to include the manufacturer's requirements.

The periodic inspection comprises an examination of the IES, which can be carried out without dismantling or disconnection of wiring. It may require the removal of covers to access live parts for inspection or testing of wiring termination.

As a minimum, the following periodic verification should be undertaken, and recorded in the maintenance records for the site:

(A) Visual inspection of the IES.

(B) Correct labelling in place and not loose.

(C) Check IES for any fault lights or displays.

(D) Operate the main switch (inverter supply) and verify that the connection time is greater than 60 s.

(E) Isolate the main switch (mains supply) and verify that the disconnection time is less than 2 s.

(F) Verify operation of any RCDs by operating the test button where it is installed on the output of the IES.

(G) Verify condition and performance of earthing system for the electrical installation.

NOTE: Non-isolated inverters and various power electronic equipment will inject a small amount of d.c. current, which has the potential to affect the condition and performance of the earth rods.

On successful completion of the IES verification, a report should be completed recording any items that require attention and any corrective action initiated or recommended.

auto login of Electrical Workers Licensing Group is licenced to temporarily download this document.
Electrical Workers Licensing Group may print this document but not more than 10% of the documents subscribed to may be held in printed form at any one time.

Copyright Standards New Zealand

APPENDIX E

EARTHING CONSIDERATION

(Informative)

This Appendix discusses earthing considerations for design of an IES.

For the purposes of this Standard, all earthing requirements of AS/NZS 3000 apply.

The two main earthing types that may be required during the installation of an IES are—

(a) protective earthing; and

(b) functional earthing.

Protective earthing is required to limit a prospective touch voltage that may arise between simultaneously accessible conductive parts when a fault occurs between a live part and an exposed conductive part or parts of the protective earthing system.

Functional earthing conductors are provided solely to ensure correct operation of electrical equipment, or to permit reliable and proper functioning of electrical installations. These conductors need not comply with requirements for main and protective earthing conductors. In such cases, functional earthing conductors are not required to be selected and installed to withstand fault currents or to be identified in the same manner as a protective earthing conductor.

In addition to complying with AS/NZS 3000, for PV arrays, the requirements of AS/NZS 5033 apply and for other energy sources, their relevant Standard or if there are none, then the manufacturer's instructions.

In general, there will be only one earthing system per installation. Issues to be considered include—

(i) earthing of the main current-carrying conductors;

(ii) earthing of exposed conductive parts for lightning protection and/or equipotential bonding (system bonding), including the metallic frame of each module; and

(iii) earthing required for functional system requirements such as cathodic protection or radio frequency interference (RFI).

Earthing of all equipment should be done in such a way as to eliminate earth loops. When earthing the individual frames and/or structures of a PV system, it is permissible to connect the earthing conductor from frame to frame providing the disconnection of any earthing point does not break the electrical continuity of the earthing conductor to other equipment (e.g. the earthing conductor is not broken or cut when making the earth connection).

Copyright Standards New Zealand

auto login of Electrical Workers Licensing Group is licenced to temporarily download this document.
Electrical Workers Licensing Group may print this document but not more than 10% of the documents subscribed to may be held in printed form at any one time.

APPENDIX F

INFORMATION ON ELECTRICITY DISTRIBUTOR REQUIREMENTS

(Informative)

F1 GENERAL

This Standard specifies the general requirements applicable throughout Australia and New Zealand for installation of an inverter energy system (IES). Some parts of this Standard allow for changes to settings and modes of operation that are able to be changed to suit various conditions or arrangements for the management of the integration of the IES into the low voltage grid. The designer or installer of the IES needs to consult with the local electricity distributor to ensure the connection and installation of the IES meets any local requirements. In general, changes or additions to this Standard required by the electricity distributor will be through formal agreement and/or in accordance with the applicable local connection requirements.

Approval from the electricity distributor and/or electricity retailer may be required prior to commissioning.

F2 AUSTRALIA

In Australia, the electricity distributor may have specific requirements that affect the design and connection of the IES being connected to the grid. Such specific connection requirements should be considered at the planning and/or design stage of an IES. These considerations may include—

(a) the maximum size IES limitations for any single connection based on grid configuration and other local electricity distributor limitations;

(b) grid imbalance requirements for IES less than or greater than 5 kVA;

(c) balancing of the IES output for multiple phase point of supply for IES with rated apparent power output less than <5 kVA in certain instances;

(d) changes to the inverter operational and protective function settings (sustained settings) to suit specific grid requirements;

(e) specific requirements for power quality response modes of IES to AS/NZS 4777.2;

(f) specific demand response modes and associated demand response enabling devices to AS/NZS 4777.2;

(g) specific location of the IES connection to a main switchboard or distribution switchboard with respect to metering arrangements;

(h) specific connection arrangements for electrical installations connected via a split phase transformer to single wire earth return supply or mini grids;

(i) requirements for voltage rise on the service lead or service main supplying the electrical installation;

(j) requirements for calculations for voltage rise within the installation—potentially requiring measurement and calculation;

(k) requirements for additional protective functions for central protection devices;

(l) specific protection functions (e.g. type of anti-islanding);

(m) specific export limits and export control device functionality;

COPYRIGHT

Copyright Standards New Zealand

auto login of Electrical Workers Licensing Group is licenced to temporarily download this document.
Electrical Workers Licensing Group may print this document but not more than 10% of the documents subscribed to may be held in printed form at any one time.

(n) specific requirements for operational modes, interfacing and integration for multiple mode inverters, which include energy storage systems; and/or

(o) interval of testing for periodic verification.

F3 INTEGRATION IN MINI OR ISOLATED GRIDS

In Australia and New Zealand, there are numerous isolated grids that may require different/additional approaches to control and protection.

Different protection limits for phase balance, frequency and voltage may be required by the electricity distributor. The electricity distributor may also have additional protective and/or integration requirements.

F4 NEW ZEALAND

In New Zealand, this Standard (AS/NZS 4777.1) and AS/NZS 3000 are used as the means of technical compliance with the requirements of the New Zealand *Electricity (Safety) Regulations 2010* and *Electricity Industry Participation Code 2010* for the connection of distributed generation systems based on IES to the New Zealand electricity distribution system.

In New Zealand, a Certificate of Compliance and an Electrical Safety Certificate are required to be completed and issued before the supply is connected. The independent inspector will issue a Record of Inspection on completion of the inspection. In general, for distributed generation systems based on an IES with a rated output less than 10 kW, full compliance with this Standard is required for the connection of the New Zealand electricity distribution system. For distributed generation systems based on an IES with greater than 10 kW output, minor deviations from the technical requirements of this Standard may be necessary, and additional work may be required if modification to the New Zealand electricity distribution system is necessary to transmit the output power available from the distributed generation systems based on the IES.

Copyright Standards New Zealand

auto login of Electrical Workers Licensing Group is licenced to temporarily download this document.
Electrical Workers Licensing Group may print this document but not more than 10% of the documents subscribed to may be held in printed form at any one time.

BIBLIOGRAPHY

AS

2676 Guide to the installation, maintenance, testing and replacement of secondary batteries in buildings

2676.1 Part 1: Vented cells

2676.2 Part 2: Sealed cells

61000.3.100 Electromagnetic compatibility (EMC)

Part 3.100: Limits—Steady state voltage limits in public electricity systems

AS/NZS

3017 Electrical installations—Verification guidelines

NZS

4219 Seismic performance of engineering systems in buildings

IEC

62109 Safety of power converters for use in photovoltaic power systems

62109-1 Part 1: General requirements

Australian Building Codes Board
National Construction Code 2016, Complete Series

New Zealand Government

Electricity (Safety) Regulations 2010

Electricity Industry Participation Code 2010

auto login of Electrical Workers Licensing Group is licenced to temporarily download this document.
Electrical Workers Licensing Group may print this document but not more than 10% of the documents subscribed to may be held in printed form at any one time.

Copyright Standards New Zealand

NOTES

Electrical Workers Licensing Group
Electrical Workers Licensing Group may print
Electrical Workers Licensing Group may print
Electrical Workers Licensing Group may print

NOTES

auto login of Electrical Workers Licensing Group is licenced to temporarily download this document.
Electrical Workers Licensing Group may print this document but not more than 10% of the documents subscribed to may be held in printed form at any one time.

Copyright Standards New Zealand

auto login of Electrical Workers Licensing Group is licenced to temporarily download this document.
Electrical Workers Licensing Group may print this document but not more than 10% of the documents subscribed to may be held in printed form at any one time.

Standards Australia

Standards Australia is an independent company, limited by guarantee, which prepares and publishes most of the voluntary technical and commercial standards used in Australia. These standards are developed through an open process of consultation and consensus, in which all interested parties are invited to participate. Through a Memorandum of Understanding with the Commonwealth government, Standards Australia is recognised as Australia's peak national standards body.

Standards New Zealand

The first national standards organisation was created in New Zealand in 1932. The New Zealand Standards Executive is established under the Standards and Accreditation Act 2015 and is the national body responsible for the production of standards.

Australian/New Zealand Standards

Under a Memorandum of Understanding between Standards Australia and Standards New Zealand, Australian/New Zealand standards are prepared by committees of experts from industry, governments, consumers, and other sectors. The requirements or recommendations contained in published standards are a consensus of the views of representative interests and also take account of comments received from other sources. They reflect the latest scientific and industry experience. Australian/New Zealand standards are kept under continuous review after publication and are updated regularly to take account of changing technology.

International involvement

Standards Australia and Standards New Zealand are responsible for ensuring that the Australian and New Zealand viewpoints are considered in the formulation of international standards and that the latest international experience is incorporated in national and joint standards. This role is vital in assisting local industry to compete in international markets. Both organisations are the national members of ISO (the International Organization for Standardization) and IEC (the International Electrotechnical Commission).

Visit our websites

www.standards.org.au www.standards.govt.nz

Copyright Standards New Zealand

STANDARDS NEW ZEALAND
PAEREWA AOTEAROA