AS/NZS 3000:2018

Incorporating Amendment No. 1 and 2

Australian/New Zealand Standard

Electrical installations

Known as the Australian/New Zealand Wiring Rules

Superseding AS/NZS 3000:2007

AS/NZS 3000:2018



Online Library subscription service PDF Terms & Conditions

An Authorised User may download a single copy of a document and retain that copy on their personal computer for a maximum of five working days for their internal purposes. At the expiry of five working days, the Document must be deleted from the Authorised User's computer.

Each Authorised User may print one hard copy of any Document for their internal purposes. These copies may not be used to build up a hard copy reference collection. A reference collection is defined as a collection comprising more than 10% of the number of the Documents within the Authorised User's subscription portfolio. All hard copies of Documents must be destroyed within 12 months or at the end of their course whichever comes first.

Copyright subsists in each of the Documents and the full title to that copyright is at all times retained by Standards New Zealand.

Except as otherwise may be expressly permitted under the Copyright Act 1994 Authorised Users will undertake not to copy, modify, merge with other software or documents, or circulate electronically without securing the prior written permission of Standards New Zealand.

Under no circumstance may a Document, whether in electronic or hard copy form, be sold, or transferred to a third party.

Under no circumstances may any Document be placed on a network of any sort without express permission of Standards New Zealand.

Authorised Users may not modify, adapt, translate, reverse engineer, decompile, disassemble or create derivative works based on the Documents.

Right of access to the subscription service is personal to Authorised Users and can not be transferred, sold, leased, rented or loaned via a time-sharing, service bureau or other arrangement.

All Authorised User identification information, including logins and passwords, are to be kept secret and secure.

No Authorised User may attempt to damage, interfere or harm the Standards New Zealand website, or any network, or system underlying or connected to the subscription service.

Copyright Standards New Zealand

auto login of Electrical Workers Licensing Group is licenced to temporarily download this document.
Electrical Workers Licensing Group may print this document but not more than 10% of the documents subscribed to may be held in printed form at any one time.

auto login of Electrical Workers Licensing Group is licenced to temporarily download this document.
Electrical Workers Licensing Group may print this document but not more than 10% of the documents subscribed to may be held in printed form at any one time.

Copyright Standards New Zealand

This joint Australian/New Zealand standard was prepared by joint Technical Committee EL-001, Wiring Rules.
It was approved on behalf of the Council of Standards Australia on 5 June 2018 and by the New Zealand Standards Approval Board on 3 April 2018.

This standard was published on 26 June 2018.

The following are represented on Committee EL-001:

Australian Building Codes Board
Australian Energy Council
Australian Industry Group
Communications, Electrical and Plumbing Union - Electrical Division
Consumer New Zealand
Consumers Federation of Australia
Electrical Contractors Association of New Zealand
Electrical Regulatory Authorities Council
Electrical Safety New Zealand
Electrical Workers Registration Board
ElectroComms & Energy Utilities Industries Skills Council
Energy Efficiency & Conservation Authority of New Zealand
Energy Networks Australia
Engineers Australia
Institute of Electrical Inspectors
Master Electricians Australia
National Electrical and Communications Association
National Electrical Switchboard Manufacturers Association
New Zealand Manufacturers and Exporters Association
NSW Department of Industry, Skills and Regional Development
Wellington Electrical Association
WorkSafe New Zealand

Keeping standards up to date

Standards are living documents which reflect progress in science, technology, and systems. To maintain their currency, all standards are periodically reviewed, and new editions are published. Between editions, amendments may be issued. Standards may also be withdrawn. It is important that readers assure themselves they are using a current standard, which should include any amendments which may have been published since the standard was purchased.

Detailed information about joint Australian/New Zealand standards can be found by visiting the standards webshop in Australia at www.saiglobal.com or Standards New Zealand's website at www.standards.govt.nz.

For more frequent listings or notification of revisions, amendments, and withdrawals, Standards Australia and Standards New Zealand offer a number of update options. For information about these services, users should contact their respective national standards organisation.

We also welcome suggestions for improvement in our standards, and especially encourage readers to notify us immediately of any apparent inaccuracies or ambiguities. Please address your comments to either the Chief Executive of Standards Australia or the New Zealand Standards Executive at the address shown on the title page.

This standard was issued in draft form for comment as DR AS/NZS 3000:2016.

Copyright Standards New Zealand

auto login of Electrical Workers Licensing Group is licenced to temporarily download this document.
Electrical Workers Licensing Group may print this document but not more than 10% of the documents subscribed to may be held in printed form at any one time.

auto login of Electrical Workers Licensing Group is licenced to temporarily download this document.
Electrical Workers Licensing Group may print this document but not more than 10% of the documents subscribed to may be held in printed form at any one time.

Australian/New Zealand Standard

Electrical installations

Known as the Australian/New Zealand Wiring Rules

Copyright Standards New Zealand

Originated as part of AS CC1—1931.
Previous edition AS/NZS 3000:2007.
Sixth edition 2018.
Reissued incorporating Amendment No. 1 (January 2020).
Reissued incorporating Amendment No. 2 (April 2021).

COPYRIGHT

© Standards Australia Limited

© The Crown in right of New Zealand, administered by the New Zealand Standards Executive 2018, 2020, 2021

All rights are reserved. No part of this work may be reproduced or copied in any form or by any means, electronic or mechanical, including photocopying, without the written permission of the publisher, unless otherwise permitted under the Copyright Act 1968 (Australia) or the Copyright Act 1994 (New Zealand).

Jointly published by SAI Global Limited under licence from Standards Australia Limited, GPO Box 476, Sydney, NSW 2001 and by Standards New Zealand, PO Box 1473, Wellington 6140.

ISBN (Print) 978-1-77686-684-7
ISBN (PDF) 978-1-77686-685-4

PREFACE

This Standard was prepared by the Joint Standards Australia/Standards New Zealand Committee EL-001, Wiring Rules, to supersede AS/NZS 3000:2007, *Electrical installations (known as the Australian/ New Zealand Wiring Rules)*.

This Standard incorporates Amendment No. 1 (January 2020) and Amendment No. 2 (April 2021). The changes required by the Amendment are indicated in the text by a marginal bar and amendment number against the clause, note, table, figure or part thereof affected.

The development of this edition was based on—

(a) new technology, new equipment and improved installation techniques;

(b) industry feedback regarding readability and compliance;

(c) identification and clarification of normative (mandatory) requirements and informative guidance material throughout the document; and

(d) experience gained in the application of the previous edition as expressed to Standards Australia and Standards New Zealand.

A2 Amendment No. 2 includes text in Clause 2.6.2.2.2 that has transitional implementation arrangements. Users of this document should consult with regulatory authorities to confirm the implementation dates of these requirements.

This Standard may be applied through legislative requirements, as indicated in Clause 1.2. This Standard supersedes AS/NZS 3000:2007 from its date of publication. This may not be practicable in some cases, and a transition period, e.g. 6 months, may need to be arranged. For example, where work on an installation was commenced before publication of this edition, the relevant regulatory authority or electricity distributor should be consulted regarding permission for the installation to be completed in accordance with AS/NZS 3000:2007.

The term ‘informative’ has been used in this Standard to define the application of the appendix to which it applies. An ‘informative’ appendix is only for information and guidance.

See Foreword for information on how to interpret and use this Standard.

This Standard comprises two parts, as set out below, with both parts bound as one document.

Part 1 provides uniform essential elements that constitute the minimum regulatory requirements for a safe electrical installation.

Part 1 also provides an alternative regulatory vehicle for Australian and New Zealand regulators seeking to move from the present prescription of AS/NZS 3000 in electrical installation safety and licensing legislation.

Electrical Workers Licensing Group may print this document but not more than 10% of the documents subscribed to may be held in printed form at any one time.
auto login of Electrical Workers Licensing Group is licenced to temporarily download this document.
Copyright Standards New Zealand

auto login of Electrical Workers Licensing Group is licenced to temporarily download this document.
Electrical Workers Licensing Group may print this document but not more than 10% of the documents subscribed to may be held in printed form at any one time.

Part 1 satisfies the following objectives:

- To allow its content to be called up in regulation as a separate Part or together with Part 2.
- To be generally complete in itself to avoid cross-referencing to Part 2.
- To provide high level safety performance outcomes/conditions without prescriptive work methods that demonstrate means of compliance (which are in Part 2).
- To establish an enforcement link to Part 2. Failure to comply with a work method in Part 2 would breach the requirements of Part 1 unless an alternative method is used.
- To establish the 'deemed to comply' status of Part 2, confirming that installations that comply with Part 2 comply with the requirements of Part 1.
- To maintain alignment with IEC 60364, *Low voltage electrical installations* (series), developments at the level of essential safety.
- To provide a mechanism for acceptance of alternative design and installation practices that are not addressed in, or are inconsistent with those given in the 'deemed to comply' Part 2. This mechanism is intended to apply where departures from the methods in Part 2 are significant rather than minor aspects that remain within the flexibility of Part 2.
- To detail requirements for designers or installers seeking to apply an alternative method to the 'deemed to comply' methods contained in Part 2.

Part 2 provides installation practices that are deemed to comply with the essential safety requirements of Part 1.

Part 2 satisfies the following objectives:

- To allow it to be called up in regulation, in addition to Part 1, to reflect a range of regulatory adoption options.
- To incorporate and elaborate on all requirements of Part 1 with additional requirements and recommendations to clarify and support compliance.
- To restore certain requirements, recommendations and examples of typical, effective compliant solutions from previous editions.
- To emphasize common, practicable and cost-effective methods that achieve safety compliance, fitness for purpose and a level of good practice rather than overly conservative or obscure measures.
- To make greater use of figures and examples to promote understanding of common or difficult aspects, e.g. line diagrams,

Copyright Standards New Zealand

alternative overcurrent device locations, ingress protection (IP) rating and switchboard access.

Changes in this edition

An asterisk (*) in the left margin against a clause, table or figure indicates where significant changes have been made in this edition of the Standard.

Changes to AS/NZS 3000:2007 include the following:

Section 1:

1 New and revised definitions are indicated in Clause 1.4 by an asterisk (*) in the left margin.

2 The definition of mains supply has been removed.

3 ‘Direct contact’ and ‘indirect contact’ are now designated ‘basic protection’ and ‘fault protection’.

4 IP ratings revised to suit local environmental conditions.

5 Requirements for conductors with green/yellow insulation are specified.

6 References to AS/NZS 3018 have been replaced with references to other Standards.

7 Requirements for alterations and repairs have been clarified and expanded.

8 New Part 1 solutions have been added along with details on where they may be used.

Section 2:

1 Operating characteristics of switchgear, control gear and switchboards have been added.

2 Origin requirements of sub-mains and final subcircuits have been added.

3 Requirements for main switch operations have been added.

4 Positions of overload protective devices have been clarified.

5 Requirements for alternate positions of short circuit protective devices have been updated.

6 Discrimination/selectivity of protective devices have been expanded.

7 Protection requirements for switchboard internal arcing faults have been enhanced.

8 Requirements for RCD protected circuits in domestic, non-domestic, non-residential and medical installations have been added, and RCD requirements for alterations and repairs clarified.

Copyright Standards New Zealand

auto login of Electrical Workers Licensing Group is licenced to temporarily download this document.
Electrical Workers Licensing Group may print this document but not more than 10% of the documents subscribed to may be held in printed form at any one time.

9 Illustration of basic clearances for switchboard access has been updated.

10 New clause on arc fault detection devices and their installation requirements has been added.

11 Requirements for switchboard installations at 800 A or greater have been enhanced, including access and egress, switchroom door sizes and minimum clearances around switchboards in switchrooms.

12 Further clarification has been provided regarding rising mains tee-offs.

Section 3:

1 Improved installation safety requirements for cables that pass through bulk thermal insulation.

2 Colour identification of active, neutral and earth conductors further clarified.

3 Requirements for wiring systems installed in positions where they are likely to be disturbed have been clarified.

4 Requirements have been clarified for cables of different electrical installations in common enclosures and for segregation of cables.

5 Requirements for segregation of cables of different voltage levels have been clarified.

Section 4:

1 Revised figures identify where IP rated equipment is to be installed.

2 The requirements for installation wiring connected via an installation coupler have been revised.

3 Electric vehicle socket-outlet requirements now included.

4 Requirements for lighting equipment and accessories have been revised.

5 Requirements for the safe installation of recessed luminaires have been enhanced, and an updated list of luminaire classifications added.

6 Requirements for cooking appliance switching devices clarified for improved safety outcomes.

7 Gas appliances and equipment isolation requirements clarified.

8 Further clarification of isolator requirements for airconditioning and heat pump systems.

9 A new clause and figures have been added relating to electrical equipment installed in locations requiring protection from the weather.

10 Installation and location requirements for socket-outlets for electric vehicle charging stations have been added.

auto login of Electrical Workers Licensing Group is licenced to temporarily download this document.
Electrical Workers Licensing Group may print this document but not more than 10% of the documents subscribed to may be held in printed form at any one time.

Copyright Standards New Zealand

11 Clearance requirements for socket-outlets and switches from open gas or electric cooking appliances have been added.

A1 12 Requirements for isolating switches to be installed adjacent to all fixed wired water heaters have been added. Application of Clause 4.8 has been clarified.

13 Requirements on hazardous areas presented by gas relief vent terminals have been added.

14 Requirements for airconditioners and heat pumps where the internal unit (or units) are supplied from a switchboard or circuit separate to that of the compressor, and new exceptions have been added.

15 Requirements for lifts installed for general use and that are not emergency lifts (safety services) have been added.

A1 16 A warning about possible adverse effects of air extract systems has been added.

Section 5:

1 MEN system further defined for clarity.

2 MEN connection requirements have been added regarding location in an accessible position.

3 Acceptable earth electrodes types have been updated.

4 Earthing requirements for SELV and PELV systems have been updated.

5 Equipotential bonding requirements have been expanded and clarified through enhanced requirements for showers, bathrooms, pools and spas.

6 Earthing of conductive building materials in combined outbuildings.

7 Earthing requirements for individual outbuildings and combined outbuildings.

8 Earthing requirements for conductive switchboard enclosures associated with unprotected consumer mains.

9 Earthing of conductive reinforcing in combined outbuildings that contain showers or baths.

10 Conductive pool structures and the bonding connection point required to be installed and bonded to the installation earthing system regardless of other specified requirements.

11 Figure showing bonding arrangements for pools and spas has been added.

Copyright Standards New Zealand

auto login of Electrical Workers Licensing Group is licenced to temporarily download this document.
Electrical Workers Licensing Group may print this document but not more than 10% of the documents subscribed to may be held in printed form at any one time.

12 Requirements on conductive fixtures and fittings installed within arm's reach of the pool edge, and that are in contact with the general mass of earth, either directly or indirectly, have been added.

Section 6:

1 Additional content applying to water containers into which persons do not normally put a part or all of their body.

2 Installation requirements for deluge showers have been clarified.

3 Showers Zone 1 has been clarified for different shower head configurations.

4 Fixed water container size reduced from 45 L to 40 L.

5 A figure for showers with a hinged door has been included.

6 Specified capacity for spa pools or tubs has been increased from 500 L to 680 L.

7 Electricity generation systems, including inverters have been excluded from being installed in classified zones.

8 Clause excluding pools and spas from being located in areas containing electrical equipment owned by the electricity distributor, that result in such electrical equipment being incorporated into any classified zone.

Section 7:

1 Clause 7.2, Safety services, has been restructured.

2 Installation requirements for electricity generation systems have been reviewed and clarified in line with applicable Standards.

3 Electric vehicle charging system requirements have been added.

4 Clause 7.8, Standards for specific electrical installations, has been revised.

Section 8:

1 A number of clauses split into subclauses to differentiate between general, application, visual inspection, test requirements and accepted values.

2 Extra low voltage installation testing requirements have been relocated to Section 8 from Section 7.

3 Clarification of RCD testing and EFLI testing.

4 The date of initial energization is now required to be recorded at the installation switchboard.

Appendices:

auto login of Electrical Workers Licensing Group is licenced to temporarily download this document.
Electrical Workers Licensing Group may print this document but not more than 10% of the documents subscribed to may be held in printed form at any one time.

Copyright Standards New Zealand

1 Appendix A—Now a single list of referenced Standards.

2 Appendix B—Table from FAQ34 (voltage drop and EFLI values comparison) added for further guidance.

3 Appendix C—Expanded and the information provided on maximum demand has been clarified and updated.

4 Appendix D—Revised to provide more comprehensive guidance information for the construction of private aerial lines.

5 Appendix E—Updates incorporated and building classifications Class 1 and Class 10 have been added.

6 Appendix F—A recent update carried out by Committee EL-024 on protection against lightning.

7 Appendix K—Switchboard equipment summary has been added to provide a checklist of requirements for switchboards.

8 Appendix L—Appendix deleted. Formerly on first aid in Australia.

9 Appendix M—Formerly on first aid in New Zealand. This content was deleted and a new Appendix on reducing the impact of power supply outages has been added to provide guidance on continuity of supply and back up plans.

10 Appendix N—New Appendix to provide guidance on the types and variations of conduit available for electrical installations.

11 Appendix O—New Appendix to provide guidance on the installation of Arc Fault Detection Devices (AFDDs).

12 Appendix P—New Appendix to provide guidance for circuits intended to supply energy to electric vehicles.

13 Appendix Q—New Appendix to provide guidance for the selection of circuit protection and switching devices when being operated on a d.c. supply that would be deemed to meet the design, equipment selection and installation criteria of this Standard.

Standards Australia and Standards New Zealand thank the International Electrotechnical Commission (IEC) for permission to reproduce Figure B4 of IEC TR 61200-413:1996, *Electrical installation guide — Clause 413: Explanatory notes to measures of protection against indirect contact by automatic disconnection of supply*. Copyright of IEC, Geneva, Switzerland. All rights reserved.

Standards Australia and Standards New Zealand thank the Australian Building Codes Board for permission to reproduce Clauses A3.1, A3.2, A3.3 and A3.4 of the National Construction Code 2016, Volume One licensed under a Creative Commons Attribution 4.0 International licence © 2016 Commonwealth of Australia and States and Territories of Australia.

Copyright Standards New Zealand

auto login of Electrical Workers Licensing Group is licenced to temporarily download this document.
Electrical Workers Licensing Group may print this document but not more than 10% of the documents subscribed to may be held in printed form at any one time.

CONTENTS

Page

PREFACE 2

FOREWORD 30

Part 1: Scope, application and fundamental principles

SECTION 1 SCOPE, APPLICATION AND FUNDAMENTAL PRINCIPLES ... 33

1.1 SCOPE 33

1.2 APPLICATION 33

1.3 REFERENCED DOCUMENTS 34

1.4 DEFINITIONS 34

1.5 FUNDAMENTAL PRINCIPLES 54
1.5.1 Protection against dangers and damage 54
1.5.2 Control and isolation 55
1.5.3 Protection against electric shock 55
1.5.4 Basic protection 56
1.5.5 Fault protection 59
1.5.6 Additional protection by the use of RCDs 62
1.5.7 Basic and fault protection by use of extra-low voltage 63
1.5.8 Protection against thermal effects in normal service 63
1.5.9 Protection against overcurrent 64
1.5.10 Protection against earth fault currents 64
1.5.11 Protection against abnormal voltages 64
1.5.12 Protection against the spread of fire 66
1.5.13 Protection against injury from mechanical movement 66
1.5.14 Protection against external influences 66

1.6 DESIGN OF AN ELECTRICAL INSTALLATION 67
1.6.1 General 67
1.6.2 Supply characteristics 67
1.6.3 Maximum demand 67
1.6.4 Utilization voltage 68
1.6.5 Electrical installation circuit arrangement 68

1.7 SELECTION AND INSTALLATION OF ELECTRICAL EQUIPMENT 68
1.7.1 General 68
1.7.2 Installation work practice 68
1.7.3 Equipment selection 69
1.7.4 Damp situations 70

1.8 VERIFICATION (INSPECTION AND TESTING) 70

1.9 MEANS OF COMPLIANCE 71
1.9.1 Compliance with Part 2 of this Standard 71

auto login of Electrical Workers Licensing Group is licenced to temporarily download this document.
Electrical Workers Licensing Group may print this document but not more than 10% of the documents subscribed to may be held in printed form at any one time.

Copyright Standards New Zealand

auto login of Electrical Workers Licensing Group is licenced to temporarily download this document.
Electrical Workers Licensing Group may print this document but not more than 10% of the documents subscribed to may be held in printed form at any one time.

Page
1.9.2 Compliance with the requirements of other standards 71
1.9.3 Alterations and repairs 71
1.9.4 Compliance by specific design and installation 71

Part 2: Installation practices—Sections 2 to 8

SECTION 2 GENERAL ARRANGEMENT, CONTROL AND PROTECTION .. 75

2.1 GENERAL 75
2.1.1 Application 75
2.1.2 Selection and installation 75

2.2 ARRANGEMENT OF ELECTRICAL INSTALLATION 75
2.2.1 Circuits 75
2.2.2 Maximum demand 77
2.2.3 Selection and installation of conductors 78
2.2.4 Operating characteristics of equipment 78

2.3 CONTROL OF ELECTRICAL INSTALLATION 79
2.3.1 General 79
2.3.2 Common control requirements 80
2.3.3 Main switches 83
2.3.4 Additional isolating switches 86
2.3.5 Emergency switching including emergency stopping 88
2.3.6 Shutting down for mechanical maintenance 90
2.3.7 Functional (control) switching 91

2.4 FAULT PROTECTION 92
2.4.1 General 92
2.4.2 Protection by automatic disconnection of supply 92
2.4.3 Types of devices 93
2.4.4 Auto-reclose devices 93

2.5 PROTECTION AGAINST OVERCURRENT 93
2.5.1 General 93
2.5.2 Devices for protection against both overload and short-circuit currents 96
2.5.3 Protection against overload current 97
2.5.4 Protection against short-circuit current 99
2.5.5 Protection against switchboard internal arcing fault currents 108
2.5.6 Coordination of overload and short-circuit protective devices 111
2.5.7 Reliability of supply 112

2.6 ADDITIONAL PROTECTION BY RESIDUAL CURRENT DEVICES 119
2.6.1 General 119
2.6.2 Selection and arrangement of devices 120
2.6.3 Additional protection by residual current devices 123

2.7 PROTECTION AGAINST OVERVOLTAGE 131
2.7.1 General 131
2.7.2 Protection by insulation or separation 131

Copyright Standards New Zealand

Page
2.7.3 Protection by protective devices 132
2.8 PROTECTION AGAINST UNDERVOLTAGE 132
2.8.1 General 132
2.8.2 Selection of protective device 133
2.9 PROTECTION AGAINST FIRE HAZARD DUE TO ARCING FAULTS 133
2.9.1 General 133
2.9.2 Type 133
2.9.3 Rating 134
2.9.4 Arrangement 134
2.9.5 Alterations 134
2.9.6 Final subcircuits in Australia 134
2.9.7 Final subcircuits in New Zealand 134
2.10 SWITCHBOARDS 134
2.10.1 General 134
2.10.2 Location of switchboards 135
2.10.3 Construction 143
2.10.4 Bars 145
2.10.5 Equipment identification 147
2.10.6 Wiring 148
2.10.7 Fire-protective measures 148
SECTION 3 SELECTION AND INSTALLATION OF WIRING SYSTEMS 150
3.1 GENERAL 150
3.1.1 Application 150
3.1.2 Selection and installation 150
3.2 TYPES OF WIRING SYSTEMS 150
3.3 EXTERNAL INFLUENCES 151
3.3.1 General 151
3.3.2 Particular influences 151
3.4 CURRENT-CARRYING CAPACITY 156
3.4.1 General 156
3.4.2 Operating temperature limits 157
3.4.3 Conductors in parallel 159
3.4.4 Coordination between conductors and protective devices 160
3.5 CONDUCTOR SIZE 160
3.5.1 General 160
3.5.2 Neutral conductor 161
3.5.3 Earthing conductor 163
3.6 VOLTAGE DROP 163
3.6.1 General 163
3.6.2 Value 163
3.6.3 Conductors in parallel 164

auto login of Electrical Workers Licensing Group is licenced to temporarily download this document.
Electrical Workers Licensing Group may print this document but not more than 10% of the documents subscribed to may be held in printed form at any one time.

Copyright Standards New Zealand

Page

3.7 ELECTRICAL CONNECTIONS 164
3.7.1 General 164
3.7.2 Connection methods 164
3.7.3 Joints in cables 168
3.7.4 Installation couplers 168
3.8 IDENTIFICATION 168
3.8.1 General 168
3.8.2 Colour identification 169
3.8.3 Exceptions and special applications 170
3.9 INSTALLATION REQUIREMENTS 172
3.9.1 General 172
3.9.2 Methods of installation 173
3.9.3 Support and fixing 173
3.9.4 Protection against mechanical damage 174
3.9.5 Wiring systems installed vertically 178
3.9.6 Change of direction 178
3.9.7 Particular installation requirements 178
3.9.8 Prevention of mutual detrimental effects between services 182
3.9.9 Selection and installation to minimize the spread of fire 185
3.9.10 Limitation of circulating and eddy currents 188
3.9.11 Minimization of electromagnetic interference 189
3.10 ENCLOSURE OF CABLES 190
3.10.1 General 190
3.10.2 Wiring enclosures 190
3.10.3 Installation of wiring enclosures 191
3.11 UNDERGROUND WIRING SYSTEMS 193
3.11.1 Suitability and protection 193
3.11.2 Classification of wiring systems 193
3.11.3 Arrangements 194
3.11.4 Installation requirements 197
3.11.5 Spacing from other underground services 203
3.12 AERIAL WIRING SYSTEMS 204
3.12.1 Types of conductor 204
3.12.2 Arrangements 204
3.12.3 Clearances 205
3.12.4 Distance between supports (spans) 207
3.12.5 Aerial conductor supports 207
3.12.6 Poles and posts (including supports, struts and extensions to structures) 208
3.12.7 Joints and connections 209
3.13 CABLES SUPPORTED BY A CATENARY 209
3.13.1 Types of cables 209
3.13.2 Catenary supports 209

Copyright Standards New Zealand

ElectricalWorkersLicensingGroupmayprintthisdocumentbutnotmorethan10%ofthedocumentssubscribedtomaybeheldinprintedformatatanyonetime.
autologinofElectricalWorkersLicensingGroupislicencedtotemporarilydownloadthisdocument.

Page
3.13.3 Clearances 209
3.14 SAFETY SERVICES 209
3.15 BUSWAYS, INCLUDING RISING MAINS SYSTEMS 211
3.16 EARTH SHEATH RETURN (ESR) SYSTEM 211
SECTION 4 SELECTION AND INSTALLATION OF ELECTRICAL EQUIPMENT 212
4.1 GENERAL 212
4.1.1 Application 212
4.1.2 Selection and installation 212
4.1.3 External influences 213
4.1.4 Adverse effects and interference 215
4.1.5 Air extraction systems 216
4.2 PROTECTION AGAINST THERMAL EFFECTS 216
4.2.1 General 216
4.2.2 Prevention of fire hazard 216
4.2.3 Protection against burns 218
4.3 CONNECTION OF ELECTRICAL EQUIPMENT 219
4.3.1 General 219
4.3.2 Direct connection 219
4.3.3 Installation wiring connected by an installation coupler(s) 220
4.3.4 Socket-outlets in installation wiring 221
4.3.5 Other connecting devices 221
4.3.6 Equipment wiring 222
4.4 SOCKET-OUTLETS 223
4.4.1 Types 223
4.4.2 Location 225
4.4.3 Earthing contacts 226
4.4.4 Switching device 226
4.4.5 Polarization and phase sequence 228
4.5 LIGHTING EQUIPMENT AND ACCESSORIES 228
4.5.1 Lampholders, including lampholders incorporated in a luminaire 228
4.5.2 Lamps and luminaires 229
4.6 SMOKE ALARMS 243
4.7 COOKING APPLIANCES 243
4.7.1 Switching device 243
4.7.2 Connection—New Zealand only 244
4.7.3 Clearance from open cooking surfaces 244
4.8 APPLIANCES PRODUCING HOT WATER OR STEAM 245
4.8.1 General 245
4.8.2 Water heaters 246

auto login of Electrical Workers Licensing Group is licenced to temporarily download this document.
Electrical Workers Licensing Group may print this document but not more than 10% of the documents subscribed to may be held in printed form at any one time.

Copyright Standards New Zealand

auto login of Electrical Workers Licensing Group is licenced to temporarily download this document.
Electrical Workers Licensing Group may print this document but not more than 10% of the documents subscribed to may be held in printed form at any one time.

© Standards New Zealand

Page

4.9 ROOM HEATERS 246
4.9.1 General 246
4.9.2 Isolating switches 247
4.9.3 Functional switches 247
4.10 ELECTRIC HEATING CABLES FOR FLOORS AND CEILINGS AND TRACE HEATING APPLICATIONS 247
4.10.1 General 247
4.10.2 Heating cables 247
4.10.3 Isolating switches 248
4.10.4 Functional switches 248
4.10.5 Additional protection 248
4.10.6 Signs 249
4.11 ELECTRIC DUCT HEATERS 249
4.12 ELECTRICITY CONVERTERS 249
4.12.1 General 249
4.12.2 Selection and installation 250
4.12.3 Control 250
4.12.4 Isolation 250
4.12.5 Overcurrent protection 251
4.12.6 Earthing 252
4.12.7 Neutral continuity 252
4.12.8 Electrical equipment connected to output 252
4.13 MOTORS 253
4.13.1 Protection against injury from mechanical movement 253
4.13.2 Protection against overload 254
4.13.3 Protection against overtemperature 255
4.14 TRANSFORMERS 256
4.14.1 General 256
4.14.2 Secondary circuit 256
4.14.3 Low voltage transformer supply 257
4.14.4 Autotransformers 257
4.14.5 Step-up transformers 257
4.15 CAPACITORS 257
4.15.1 General 257
4.15.2 Electrical equipment 257
4.15.3 Provision for discharge and control 258
4.16 ELECTRICAL EQUIPMENT CONTAINING LIQUID DIELECTRICS 260
4.16.1 General 260
4.16.2 Liquid dielectrics having a flashpoint not exceeding 250°C 260
4.17 BATTERIES 260
4.18 GAS APPLIANCES AND EQUIPMENT 260
4.18.1 Gas appliances 260

auto login of Electrical Workers Licensing Group is licenced to temporarily download this document.
Electrical Workers Licensing Group may print this document but not more than 10% of the documents subscribed to may be held in printed form at any one time.

Page
4.18.2 Gas cylinders containing heavier-than-air gases—Outdoors 261
4.18.3 Gas cylinders—Indoors—New Zealand only 262
4.18.4 Gas relief vent terminal—Natural gas, LP Gas or Biogas 262
4.18.5 Reticulated lighter-than-air gas system, metering system and regulators—New Zealand only 263
4.19 AIRCONDITIONING AND HEAT PUMP SYSTEMS 264
4.20 LIFTS 265
4.20.1 General 265
4.20.2 Lift supply arrangement 265
4.20.3 Labelling 265
4.20.4 Motor-room-less lifts (MRLs) 265
SECTION 5 EARTHING ARRANGEMENTS AND EARTHING CONDUCTORS 267
5.1 GENERAL 267
5.1.1 Application 267
5.1.2 Selection and installation 267
5.1.3 MEN earthing system 267
5.1.4 Other earthing systems 270
5.2 EARTHING FUNCTIONS 271
5.2.1 Protective earthing 271
5.2.2 Functional earthing (FE) 271
5.2.3 Earthing for combined protective and functional purposes 272
5.3 EARTHING SYSTEM PARTS 272
5.3.1 General 272
5.3.2 Earthing conductor material and type 273
5.3.3 Earthing conductor size (cross-sectional area) 276
5.3.4 Main earthing terminal/connection or bar 280
5.3.5 MEN connection 281
5.3.6 Earth electrodes 282
5.3.7 Functional earthing conductors 284
5.4 EARTHING OF EQUIPMENT 284
5.4.1 General 284
5.4.2 Socket-outlets 286
5.4.3 Lighting points 286
5.4.4 Luminaires 286
5.4.5 Conductive supports for aerial conductors 287
5.4.6 Structural metalwork including conductive building materials 287
5.4.7 Submersible pumps 288
5.4.8 Variable frequency devices 288
5.5 EARTHING ARRANGEMENTS 289
5.5.1 Main earthing conductor 289
5.5.2 Protective earthing conductors 290
5.5.3 Particular methods of earthing 292

Copyright Standards New Zealand

auto login of Electrical Workers Licensing Group is licenced to temporarily download this document.
Electrical Workers Licensing Group may print this document but not more than 10% of the documents subscribed to may be held in printed form at any one time.

Copyright Standards New Zealand

Page

5.5.4 Continuity 300
5.5.5 Installation 301
5.5.6 Connections 302

5.6 EQUIPOTENTIAL BONDING 303
5.6.1 General 303
5.6.2 Arrangement 304
5.6.3 Bonding conductors 311

5.7 EARTH FAULT-LOOP IMPEDANCE 312
5.7.1 General 312
5.7.2 Disconnection times 313
5.7.3 Earth fault-loop 313
5.7.4 Impedance 314
5.7.5 Supplementary equipotential bonding 314

5.8 OTHER EARTHING ARRANGEMENTS 315

SECTION 6 DAMP SITUATIONS 316

6.1 GENERAL 316
6.1.1 Application 316
6.1.2 Selection and installation 316

6.2 BATHS, SHOWERS AND OTHER FIXED WATER CONTAINERS 317
6.2.1 Scope 317
6.2.2 Classification of zones 317
6.2.3 Protection against electric shock—Prohibited measures 320
6.2.4 Selection and installation of electrical equipment 320

6.3 SWIMMING POOLS, PADDLING POOLS AND SPA POOLS OR TUBS 336
6.3.1 Scope 336
6.3.2 Classification of zones 337
6.3.3 Protection against electric shock 338
6.3.4 Selection and installation of electrical equipment 339

6.4 FOUNTAINS AND WATER FEATURES 348
6.4.1 Scope 348
6.4.2 Classification of zones 349
6.4.3 Protection against electric shock 349
6.4.4 Selection and installation of electrical equipment 350

6.5 SAUNAS 354
6.5.1 Scope 354
6.5.2 Classification of zones 354
6.5.3 Protection against electric shock 355
6.5.4 Selection and installation of electrical equipment 355

6.6 REFRIGERATION ROOMS 358
6.6.1 Scope 358
6.6.2 Protection against electric shock 358

Page
6.6.3 Selection and installation of electrical equipment 358
6.7 SANITIZATION AND GENERAL HOSING-DOWN OPERATIONS 360
6.7.1 Scope 360
6.7.2 Classification of zone 360
6.7.3 Protection against electric shock 361
6.7.4 Selection and installation of electrical equipment 361
SECTION 7 SPECIAL ELECTRICAL INSTALLATIONS 362
7.1 GENERAL 362
7.1.1 Application 362
7.1.2 Selection and installation 362
7.2 SAFETY SERVICES 363
7.2.1 Scope and general 363
7.2.2 Supply systems 364
7.2.3 Main switchboard and switchgear 367
7.2.4 Main switches 371
7.2.5 Fire pumps and fire pump control equipment 373
7.2.6 Fire and smoke detection equipment and fire alarm systems 377
7.2.7 Air-handling systems 378
7.2.8 Evacuation equipment 379
7.2.9 Emergency lifts 380
7.2.10 Emergency motor-room-less lifts 382
7.3 ELECTRICITY GENERATION SYSTEMS 384
7.3.1 General 384
7.3.2 Selection and installation of system 385
7.3.3 Control 385
7.3.4 Isolation 386
7.3.5 Overcurrent protection 387
7.3.6 Earthing 388
7.3.7 Connected electrical equipment 388
7.3.8 Connection to electrical installation 389
7.4 PROTECTION BY ELECTRICAL SEPARATION (ISOLATED SUPPLY) 397
7.4.1 General 397
7.4.2 Source of supply 397
7.4.3 Arrangement of circuits 398
7.4.4 Switching devices 398
7.4.5 Supply to single item of electrical equipment 398
7.4.6 Supply to multiple items of electrical equipment 398
7.4.7 Variable speed drive (VSD) EMI filters 399
7.4.8 Testing 399
7.5 EXTRA-LOW VOLTAGE ELECTRICAL INSTALLATIONS 402
7.5.1 Scope 402
7.5.2 Application 402
7.5.3 Sources of supply to SELV and PELV systems 402

Copyright Standards New Zealand

auto login of Electrical Workers Licensing Group is licenced to temporarily download this document.
Electrical Workers Licensing Group may print this document but not more than 10% of the documents subscribed to may be held in printed form at any one time.

auto login of Electrical Workers Licensing Group is licenced to temporarily download this document.
Electrical Workers Licensing Group may print this document but not more than 10% of the documents subscribed to may be held in printed form at any one time.

Page

7.5.4 Separation requirements for SELV and PELV circuits 403
7.5.5 Arrangement of SELV circuits 403
7.5.6 Arrangement of PELV circuits 404
7.5.7 Voltage drop in conductors 404
7.5.8 Control of an electrical installation 405
7.5.9 Overcurrent protection 405
7.5.10 Connecting devices 406
7.5.11 Wiring systems 406
7.5.12 Testing 406

7.6 HIGH VOLTAGE ELECTRICAL INSTALLATIONS 407
7.6.1 Scope 407
7.6.2 Application 407
7.6.3 Issues relevant to high voltage installations 408

7.7 HAZARDOUS AREAS (EXPLOSIVE GAS OR COMBUSTIBLE DUSTS) 408
7.7.1 Scope 408
7.7.2 Classification of hazardous areas 408

7.8 STANDARDS FOR SPECIFIC ELECTRICAL INSTALLATIONS 409
7.8.1 Scope 409
7.8.2 Standards containing requirements that are additional to, replace, or modify the general requirements of this Standard 410
7.8.3 Standards containing guidance 412

7.9 SUPPLIES FOR ELECTRIC VEHICLES (NZ ONLY) 413
7.9.1 Scope 413
7.9.2 Supply (NZ only) 413
7.9.3 Domestic electrical installations (NZ only) 414
7.9.4 Other electrical installations (NZ only) 415

SECTION 8 VERIFICATION 416

8.1 GENERAL 416
8.1.1 Application 416
8.1.2 General requirements 416
8.1.3 Periodic inspection and testing 416

8.2 VISUAL INSPECTION 417
8.2.1 General 417
8.2.2 Checklist 417

8.3 TESTING 419
8.3.1 General 419
8.3.2 Test methods 419
8.3.3 Mandatory tests 420
8.3.4 Sequence of tests 420
8.3.5 Continuity of the earthing system 421
8.3.6 Insulation resistance 422
8.3.7 Polarity and correct circuit connections 423

Copyright Standards New Zealand

Page
8.3.8 'Text deleted' 424
8.3.9 Verification of earth fault-loop impedance (EFLI) 425
8.3.10 Operation of RCDs 428
8.4 VERIFICATION RECORDS 429
APPENDICES
A REFERENCED DOCUMENTS 430
B CIRCUIT PROTECTION GUIDE 439
C CIRCUIT ARRANGEMENTS 456
D MINIMUM SIZES OF POSTS, POLES AND STRUTS FOR AERIAL LINE CONDUCTORS 491
E ELECTRICAL INSTALLATION REQUIREMENTS IN NATIONAL CONSTRUCTION CODES 513
F SURGE PROTECTIVE DEVICES 521
G DEGREES OF PROTECTION OF ENCLOSED EQUIPMENT 527
H WS CLASSIFICATION OF WIRING SYSTEMS 532
I PROTECTIVE DEVICE RATINGS AND METRIC EQUIVALENT SIZES FOR IMPERIAL CABLES USED IN ALTERATIONS AND REPAIRS 540
J SYMBOLS USED IN THIS STANDARD 543
K SWITCHBOARD REQUIREMENT SUMMARY 545
L (Deleted) 558
M REDUCING THE IMPACT OF POWER SUPPLY OUTAGES—CONTINUITY OF SUPPLY FOR ACTIVE ASSISTED LIVING AND HOMECARE MEDICAL SITUATIONS 559
N ELECTRICAL CONDUITS 561
O INSTALLATION OF ARC FAULT DETECTION DEVICES (AFDDs) 565
P GUIDANCE FOR INSTALLATION AND LOCATION OF ELECTRICAL VEHICLE SOCKET-OUTLETS AND CHARGING STATIONS 568
Q D.C. CIRCUIT PROTECTION APPLICATION GUIDE 575
INDEX 578

auto login of Electrical Workers Licensing Group is licenced to temporarily download this document.
Electrical Workers Licensing Group may print this document but not more than 10% of the documents subscribed to may be held in printed form at any one time.

Copyright Standards New Zealand

LIST OF TABLES

TABLE		*Page*
3.1	CABLE TYPES AND THEIR APPLICATION IN WIRING SYSTEMS	151
3.2	LIMITING TEMPERATURES FOR INSULATED CABLES	157
3.3	NOMINAL MINIMUM CROSS-SECTIONAL AREA OF CONDUCTORS	160
3.4	CONDUCTOR COLOURS FOR INSTALLATION WIRING	168
3.5	UNDERGROUND WIRING SYSTEM CATEGORIES	196
3.6	UNDERGROUND WIRING SYSTEMS—MINIMUM DEPTH OF COVER	198
3.7	MINIMUM SEPARATION OF UNDERGROUND SERVICES	203
3.8	MINIMUM AERIAL CONDUCTOR CLEARANCES	206
3.9	AERIAL CONDUCTOR MAXIMUM SPANS	207
3.10	SPACING BETWEEN AERIAL CONDUCTORS AT SUPPORTS	208
4.1	TEMPERATURE LIMITS IN NORMAL SERVICE FOR PARTS OF ELECTRICAL EQUIPMENT WITHIN ARM'S REACH	218
4.2	MINIMUM DISTANCE BETWEEN LAMP AND ILLUMINATED FLAMMABLE MATERIALS	230
4.3	GUIDE TO RECESSED LUMINAIRE CLASSIFICATION, APPLICATION AND GENERAL RESTRICTIONS ON USE	238
5.1	MINIMUM COPPER EARTHING CONDUCTOR SIZE	278
5.2	ACCEPTABLE EARTH ELECTRODES	283
6.1	SELECTION AND INSTALLATION OF ELECTRICAL EQUIPMENT FOR BATHS, SHOWERS AND OTHER FIXED WATER CONTAINERS	322
6.2	SELECTION AND INSTALLATION OF ELECTRICAL EQUIPMENT FOR SWIMMING POOLS, PADDLING POOLS AND SPA POOLS OR TUBS	343
6.3	SELECTION AND INSTALLATION OF ELECTRICAL EQUIPMENT FOR FOUNTAINS AND WATER FEATURES	352
8.1	MAXIMUM VALUES OF EARTH FAULT-LOOP IMPEDANCE FOR THE TOTAL CIRCUIT INCLUDING THE SUPPLY TRANSFORMER (Z_s AT 230 V) VALUES RELATING TO OPERATION OF PROTECTIVE DEVICES ON THE FINAL SUBCIRCUIT	427
8.2	MAXIMUM VALUES OF RESISTANCE OF FINAL SUBCIRCUITS AT 80% RATED CURRENT RELATING TO Z_s IMPEDANCE VALUES IN TABLE 8.1	428

auto login of Electrical Workers Licensing Group is licenced to temporarily download this document.
Electrical Workers Licensing Group may print this document but not more than 10% of the documents subscribed to may be held in printed form at any one time.

© Standards New Zealand

TABLE		*Page*
B1	MAXIMUM ROUTE LENGTHS FOR DIFFERENT SIZES OF CONDUCTORS AND PROTECTIVE DEVICES USING APPROPRIATE MEAN TRIPPING CURRENTS (I_a)*	452
B2	COMPARISON OF CIRCUIT ROUTE LENGTH BASED ON LOOP IMPEDANCE AND VARIOUS VOLTAGE DROPS	454
C1	MAXIMUM DEMAND—SINGLE AND MULTIPLE DOMESTIC ELECTRICAL INSTALLATIONS	458
C2	MAXIMUM DEMAND—NON-DOMESTIC ELECTRICAL INSTALLATIONS	467
C3	MAXIMUM DEMAND—ENERGY DEMAND METHOD FOR NON-DOMESTIC INSTALLATIONS	474
C4	UPSTREAM CIRCUIT LOADING AFTER DIVERSITY	475
C5	MAXIMUM DEMAND—DOMESTIC COOKING APPLIANCES	477
C6	SIMPLIFIED PROTECTIVE DEVICE SELECTION FOR CABLES FROM 1 mm^2 TO 25 mm^2 USED IN SINGLE-PHASE APPLICATIONS	478
C7	SIMPLIFIED PROTECTIVE DEVICE SELECTION FOR CABLES FROM 1 mm^2 TO 25 mm^2 USED IN THREE-PHASE APPLICATIONS	479
C8	VOLTAGE DROP—SIMPLIFIED METHOD	481
C9	GUIDANCE ON THE LOADING OF POINTS PER FINAL SUBCIRCUIT	483
C10	GUIDE TO THE MAXIMUM NUMBER OF SINGLE-CORE SHEATHED CABLES INSTALLED IN CONDUIT	488
C11	GUIDE TO THE MAXIMUM NUMBER OF TWO-CORE AND EARTH CABLES INSTALLED IN CONDUIT	489
C12	GUIDE TO THE MAXIMUM NUMBER OF FOUR-CORE AND EARTH CABLES INSTALLED IN CONDUIT	490
D1	SINKING OF POSTS/POLES IN GROUND	498
D2	FORCE EXERTED BY AERIAL LINE CONDUCTORS	499
D3	SQUARE HARDWOOD POST (100 MPa TIMBER TO AS 2209) STRENGTH RATINGS	500
D4	SQUARE HARDWOOD STRUTS (100 MPa TIMBER TO AS 2209) STRENGTH RATINGS	501
D5	ROUND HARDWOOD POLE (100 MPa TIMBER TO AS 2209) STRENGTH RATINGS—HEIGHT REDUCED FROM BASE	501
D6	ROUND HARDWOOD POLE (100 MPa TIMBER TO AS 2209) STRENGTH RATINGS—HEIGHT REDUCED FROM TOP	502
D7	ANGLE IRON STRUTS GRADE 250 STRENGTH RATINGS (CROSS-SECTION DIMENSIONS × THICKNESS, mm)	503
D8	ANGLE IRON STRUTS GRADE 300 STRENGTH RATINGS (CROSS-SECTION DIMENSIONS × THICKNESS, mm)	504

auto login of Electrical Workers Licensing Group is licenced to temporarily download this document.
Electrical Workers Licensing Group may print this document but not more than 10% of the documents subscribed to may be held in printed form at any one time.

Copyright Standards New

TABLE		*Page*
D9	FABRICATED RIVERTON OCTAGONAL STEEL POLE STRENGTH RATINGS	504
D10	GRADE 250 STEEL-PIPE (DIAMETER × THICKNESS, mm) STRENGTH RATINGS	505
D11	GRADE 350 STEEL-PIPE (DIAMETER × THICKNESS, mm) STRENGTH RATINGS	506
D12(A)	GRADE 350 STEEL SQUARE SECTION (WIDTH × THICKNESS, mm) STRENGTH RATINGS	507
D12(B)	GRADE 350 STEEL SQUARE SECTION (WIDTH × THICKNESS, mm) STRENGTH RATINGS	508
D13(A)	GRADE 450 STEEL SQUARE SECTION (WIDTH × THICKNESS, mm) STRENGTH RATINGS	510
D13(B)	GRADE 450 STEEL SQUARE SECTION (WIDTH × THICKNESS, mm) STRENGTH RATINGS	511
H1	DEGREE OF PROTECTION INDICATED BY THE FIRST CHARACTERISTIC NUMERAL	533
H2	DEGREE OF PROTECTION INDICATED BY THE SECOND CHARACTERISTIC NUMERAL	534
I1	PROTECTIVE DEVICE RATINGS	541
I2	SIZES OF IMPERIAL AND METRIC CABLES FOR CONNECTION IN PARALLEL	542
K1	CORRESPONDING PROVISIONS BETWEEN AS/NZS 3000 AND THE AS/NZS 61439 SERIES	548
K2	MINIMUM REQUIREMENTS FOR INTERNAL SEPARATION	550
N1	FIRST AND SECOND NUMERALS IN COMPARISON WITH DUTY RATINGS IN AS/NZS 2053 SERIES AND AS/NZS 61386 SERIES	563
N2	THIRD AND FOURTH NUMERALS FOR TEMPERATURE RATINGS COMPARISON BETWEEN AS/NZS 2053 SERIES AND AS/NZS 61386 SERIES	564

auto login of Electrical Workers Licensing Group is licenced to temporarily download this document.
Electrical Workers Licensing Group may print this document but not more than 10% of the documents subscribed to may be held in printed form at any one time.

Copyright New Zealand

LIST OF FIGURES

FIGURE		*Page*
1.1	ZONE OF ARM'S REACH	36
1.2	DIRECT CONTACT	39
1.3	INDIRECT CONTACT	39
2.1	TYPICAL EXAMPLES OF UNPROTECTED AND PROTECTED CONSUMER MAINS	95
2.2(A)	GENERAL PROTECTION AGAINST OVERLOAD (OL) AND SHORT-CIRCUIT (SC) FOR SUBMAINS AND FINAL SUBCIRCUITS	102
2.2(B)	PROTECTIVE DEVICE OF LOW BREAKING CAPACITY WITH A DEVICE OF REQUIRED BREAKING CAPACITY INSTALLED ON THE SUPPLY SIDE	102
2.3	MANDATORY OMISSION OF OVERLOAD AND/OR SHORT-CIRCUIT PROTECTION	103
2.4	ALTERNATIVE POSITION OF OVERLOAD PROTECTION	103
2.5	ALTERNATIVE POSITION OF OVERLOAD PROTECTION	104
2.6	OMISSION OF OVERLOAD PROTECTION	104
2.7	OMISSION OF OVERLOAD PROTECTION	105
2.8	ALTERNATIVE POSITION OF SHORT-CIRCUIT PROTECTIVE DEVICE	106
2.9	CONDUCTORS CONNECTING SOURCES OF SUPPLY TO THEIR ASSOCIATED SWITCHBOARD	107
2.10	REQUIRED LOCATIONS AND ALTERNATIVE LOCATIONS OF OVERLOAD AND SHORT-CIRCUIT PROTECTION	108
2.11	PARTS OF FUNCTIONAL UNITS	110
2.12	DISCRIMINATION/SELECTIVITY BETWEEN PROTECTIVE DEVICES—GENERAL	113
2.13	CIRCUIT-BREAKER CURVES—GENERAL EXPLANATION, SETTINGS AND ZONES	116
2.14	CIRCUIT-BREAKER CURVES WITH DISCRIMINATION REQUIREMENTS BETWEEN CIRCUIT-BREAKERS RATED GREATER THAN OR EQUAL TO 800 A	117
2.15	CIRCUIT-BREAKER CURVES WITH DISCRIMINATION REQUIREMENTS BETWEEN CIRCUIT-BREAKERS RATED GREATER THAN OR EQUAL TO 250 A AND UP TO 800 A	117
2.16	CIRCUIT-BREAKER CURVES WITH DISCRIMINATION REQUIREMENTS BETWEEN CIRCUIT-BREAKERS RATED LESS THAN 250 A	118
2.17	FUSE CURVES WITH DISCRIMINATION REQUIREMENTS	118

auto login of Electrical Workers Licensing Group is licenced to temporarily download this document.
Electrical Workers Licensing Group may print this document but not more than 10% of the documents subscribed to may be held in printed form at any one time.

Copyright Standards New Zealand

FIGURE *Page*

2.18 FUSE AND CIRCUIT-BREAKER CURVES WITH DISCRIMINATION REQUIREMENTS 119
2.19 ACCESS TO SWITCHBOARDS—FREESTANDING SWITCHBOARD WITH SWITCHGEAR RACKED OUT 137
2.20 ACCESS TO SWITCHBOARDS—SWITCHBOARD IN CORNER POSITION 137
2.21 ACCESS TO SWITCHBOARDS—SWITCHBOARD WITH ONE END AGAINST WALL 138
2.22 ACCESS TO SWITCHBOARDS—SWITCHBOARD DOORS THAT OPEN INTO ACCESS WAYS OR NARROW PASSAGE WAYS..... 138
2.23 ACCESS TO SWITCHBOARDS—FACING SWITCHBOARDS 139
2.24 EXAMPLE OF EXCEPTION TO CLAUSE 2.10.2.2(iii) WHERE ONLY ONE EXIT PATH NEEDS TO BE PROVIDED . 139
3.1 SINGLE-PHASE CABLES 171
3.2 MULTIPHASE CABLES..... 171
3.3 PROTECTION OF WIRING SYSTEMS WITHIN SOLID OR FRAMED WALLS 174
3.4 PROTECTION OF WIRING SYSTEMS WITHIN CEILINGS, FLOORS AND WALL SPACES 175
3.5 PROTECTION OF WIRING SYSTEMS WITHIN CONCRETE ROOFS, CEILINGS OR FLOORS..... 175
3.6 PROHIBITED WIRING SYSTEM LOCATION—ROOF OR WALL-LINING MATERIALS 176
3.7 PROTECTION OF WIRING SYSTEM BELOW ROOFING MATERIAL 176
3.8 SEPARATION OF LOW VOLTAGE CABLES FROM TELECOMMUNICATIONS CABLES ON SURFACES OR CONCEALED IN WALLS, FLOORS OR CEILINGS..... 184
3.9 SEPARATION OF LOW VOLTAGE CABLES FROM TELECOMMUNICATIONS CABLES IN UNDERGROUND TRENCHES..... 184
3.10 EXAMPLE OF A CATEGORY A WIRING SYSTEM WITH CABLE LOCATED BELOW POURED CONCRETE OF 75 mm MINIMUM THICKNESS..... 199
3.11 EXAMPLE OF A CATEGORY A UNDERGROUND WIRING SYSTEM WITH CABLE LOCATED BELOW NATURAL GROUND 199
3.12 EXAMPLE OF A CATEGORY A UNDERGROUND WIRING SYSTEM WITH CABLE LOCATED DIRECTLY BELOW POURED CONCRETE OF 75 mm MINIMUM THICKNESS WITHIN THE CONFINES OF A BUILDING..... 200

ElectricalWorkersLicensingGroupmayprintthisdocumentbutnotmorethan10%oftheddocumentssubscribedtomaybeheldinprintedformatatanyonetime.
autologinofElectricalWorkersLicensingGroupislicencedtotemporarilydownloadthisdocument.
Copyright Standards New Zealand

auto login of Electrical Workers Licensing Group is licenced to temporarily download this document.
Electrical Workers Licensing Group may print this document but not more than 10% of the documents subscribed to may be held in printed form at any one time.

Copyright Standards New Zealand

FIGURE *Page*

3.13 EXAMPLE OF A CATEGORY B UNDERGROUND WIRING SYSTEM WITH CABLE LOCATED BELOW POURED CONCRETE OF 75 mm MINIMUM THICKNESS 200
3.14 EXAMPLE OF A CATEGORY B UNDERGROUND WIRING SYSTEM WITH CABLE LOCATED BELOW NATURAL GROUND 201
3.15 EXAMPLE OF A CATEGORY B UNDERGROUND WIRING SYSTEM WITH CABLE LOCATED DIRECTLY BELOW POURED CONCRETE OF 75 mm MINIMUM THICKNESS WITHIN THE CONFINES OF A BUILDING 201
3.16 EXAMPLE OF A CATEGORY C UNDERGROUND WIRING SYSTEM 202
3.17 EXAMPLE OF AN UNDERGROUND WIRING SYSTEM IN SLOPING GROUND 202
4.1 AREA UNDER AN OVERHANG REQUIRING ACCESSORIES TO BE A MINIMUM OF IP33 (SIDE VIEW) 215
4.2 AREA UNDER AN OVERHANG REQUIRING ACCESSORIES TO BE A MINIMUM OF IP33 (FRONT VIEW) ... 215
4.3 DIRECT CONNECTION 219
4.4 DIRECT CONNECTION BY INSTALLATION COUPLER 220
4.5 DIRECT CONNECTION BY INSTALLATION COUPLER—EXCEPTION 220
4.6 CONNECTION BY SOCKET-OUTLET 221
4.7 CONNECTION BY OTHER CONNECTING DEVICES 222
4.8 EQUIPMENT WIRING—EXCEPTION FOR PENDANT SOCKET-OUTLET 222
4.9 DEFAULT MINIMUM CLEARANCES FOR RECESSED LUMINAIRES 231
4.10 WORDING FOR WARNING SIGN TO BE INSTALLED IN ACCESSIBLE ROOF SPACES CONTAINING RECESSED LUMINAIRES 232
4.11 NON-IC SYMBOL 235
4.12 DO-NOT-COVER SYMBOL 235
4.13 CA90 SYMBOL 235
4.14 CA135 SYMBOL 236
4.15 IC SYMBOL 236
4.16 IC-4 SYMBOL 237
4.17 PROHIBITED LOCATION FOR SOCKET-OUTLETS AND SWITCHES INSTALLED NEAR OPEN COOKING SURFACES (GAS OR ELECTRIC) 245
4.18 HAZARDOUS AREA PRESENTED BY A GAS CYLINDER OUTDOORS FOR HEAVIER-THAN-AIR GASES 262

FIGURE		*Page*
4.19	EXCLUSION ZONES PRESENTED BY A GAS RELIEF VENTING TERMINAL	263
4.20	HAZARDOUS AREA FOR RETICULATED GAS SUPPLY REGULATORS	264
5.1	MULTIPLE EARTHED NEUTRAL (MEN) SYSTEM OF EARTHING—GENERAL ARRANGEMENT PEN DISTRIBUTION TN-C-S	269
5.2	ALTERNATIVE EARTHING ARRANGEMENT IN AN OWNER OR USER OPERATED SUPPLY SUBSTATION INSTALLATION	270
5.3	EXAMPLES OF EARTHING ARRANGEMENTS	292
5.4	EXAMPLE OF EARTHING OF AN INDIVIDUAL OUTBUILDING	294
5.5	EXAMPLE OF EARTHING OF COMBINED OUTBUILDINGS	295
5.6(A)	EARTHING ARRANGEMENT FOR CONDUCTIVE SWITCHBOARD ENCLOSURES ASSOCIATED WITH UNPROTECTED CONSUMER MAINS	298
5.6(B)	EARTHING ARRANGEMENT FOR CONDUCTIVE SWITCHBOARD ENCLOSURES ASSOCIATED WITH UNPROTECTED CONSUMER MAINS	299
5.6(C)	EARTHING ARRANGEMENT FOR CONDUCTIVE SWITCHBOARD ENCLOSURES ASSOCIATED WITH UNPROTECTED CONSUMER MAINS	300
5.7	EXAMPLES OF EQUIPOTENTIAL BONDING OF CONDUCTIVE WATER PIPING	305
5.8	EXAMPLES OF EQUIPOTENTIAL BONDING OF CONDUCTIVE WATER PIPING (WITH EXCEPTION)	306
5.9	EXAMPLE OF BONDING ARRANGEMENT FOR POOLS AND SPAS	310
6.1	ZONE DIMENSIONS (PLAN)—BATH WITHOUT SHOWER OR FIXED BARRIER	323
6.2	ZONE DIMENSIONS (ELEVATION)—BATH WITHOUT SHOWER OR FIXED BARRIER	324
6.3	ZONE DIMENSIONS (PLAN)—SHOWER WITH FIXED PLUMBING CONNECTION ON WALL AND BASE WITHOUT BARRIERS	325
6.4	ZONE DIMENSIONS (ELEVATION)—SHOWER WITH FIXED PLUMBING CONNECTION ON WALL AND BASE WITHOUT BARRIERS	326
6.5	BATHS AND SHOWERS, ZONE DIMENSIONS (PLAN)—SHOWER WITH FIXED PLUMBING CONNECTION ON CEILING AND WITHOUT BARRIERS	327

auto login of Electrical Workers Licensing Group is licenced to temporarily download this document.
Electrical Workers Licensing Group may print this document but not more than 10% of the documents subscribed to may be held in printed form at any one time.

Copyright Standards Net

FIGURE		*Page*
6.6	BATHS AND SHOWERS, ZONE DIMENSIONS (ELEVATION)—SHOWER WITH FIXED PLUMBING CONNECTION ON CEILING AND WITHOUT BARRIERS	328
6.7	ZONE DIMENSIONS (PLAN)—BATH WITHOUT SHOWER WITH FIXED BARRIER	329
6.8	ZONE DIMENSIONS (PLAN)—ENCLOSED SHOWER WITH HINGED DOOR	330
6.9	ZONE DIMENSIONS (PLAN)—BATH WITH SHOWER WITHOUT BARRIER	331
6.10	ZONE DIMENSIONS (PLAN)—ENCLOSED SHOWER WITH FIXED PLUMBING CONNECTION ON CEILING OR WALL AND A BARRIER	332
6.11	ZONE DIMENSIONS (ELEVATION)—SHOWER WITH FIXED PLUMBING CONNECTION ON CEILING OR WALL AND A BARRIER	333
6.12	ZONE DIMENSIONS (PLAN)—PARTIALLY ENCLOSED SHOWER WITH FIXED PLUMBING CONNECTION ON WALL	334
6.13	ZONE DIMENSIONS FOR OTHER FIXED WATER CONTAINERS WITH FIXED WATER OUTLETS WHERE NO CONTAINER HAS A CAPACITY EXCEEDING 40 L	335
6.14	ZONE DIMENSIONS FOR OTHER FIXED WATER CONTAINERS WITH A FLEXIBLE WATER OUTLET OR WITH A CAPACITY EXCEEDING 40 L	336
6.15	ZONE DIMENSIONS OF IN-GROUND SWIMMING POOLS	344
6.16	ZONE DIMENSIONS OF ABOVE-GROUND SWIMMING POOLS	345
6.17	ZONE DIMENSIONS OF SWIMMING POOLS WITH FIXED BARRIERS (MINIMUM 1.8 m HIGH)	346
6.18	ZONE DIMENSIONS OF IN-GROUND SPA POOLS AND TUBS WITH WATER CAPACITY NOT EXCEEDING 5000 L	347
6.19	ZONE DIMENSIONS OF ABOVE-GROUND SPA POOLS AND TUBS WITH WATER CAPACITY NOT EXCEEDING 5000 L	348
6.20	EXAMPLE FOR DETERMINATION OF THE ZONES OF A FOUNTAIN (PLAN)	353
6.21	EXAMPLE FOR DETERMINATION OF THE ZONES OF A FOUNTAIN (ELEVATION)	354
6.22	CLASSIFIED ZONES FOR SAUNA HEATERS	357
7.1	WIRING SYSTEM (WS) CLASSIFICATION REQUIRED FOR LIFT CIRCUITS	365
7.2(A)	TYPICAL ARRANGEMENT OF MAIN SWITCHBOARD WITH ONE NORMAL SUPPLY	369
7.2(B)	TYPICAL ARRANGEMENT OF MAIN SWITCHBOARD WITH TWO NORMAL SUPPLIES	370

auto login of Electrical Workers Licensing Group is licenced to temporarily download this document.
Electrical Workers Licensing Group may print this document but not more than 10% of the documents subscribed to may be held in printed form at any one time.

Copyright Standards New Zealand

FIGURE		*Page*
7.3	TYPICAL EXAMPLE OF CONNECTION OF A THREE PHASE ALTERNATIVE SUPPLY TO A SWITCHBOARD WITH A LOCAL MEN CONNECTION (THREE POLE/THREE POLE CHANGEOVER)	391
7.4	TYPICAL EXAMPLE OF CONNECTION OF A STAND-ALONE SYSTEM TO A SWITCHBOARD WITH A LOCAL MEN CONNECTION	392
7.5	TYPICAL EXAMPLE OF CONNECTION OF A SINGLE PHASE ALTERNATIVE SUPPLY TO A SWITCHBOARD WITH A LOCAL MEN CONNECTION BY MEANS OF A PLUG AND SOCKET	393
7.6	TYPICAL EXAMPLE OF CONNECTION OF A THREE PHASE ALTERNATIVE SUPPLY TO A SWITCHBOARD WITH A LOCAL MEN CONNECTION BY MEANS OF A PLUG AND SOCKET	394
7.7	TYPICAL MAIN SWITCHBOARD CONECTION OF AN INVERTER ENERGY SYSTEM	396
7.8	SEPARATED (ISOLATED) SUPPLIES	401
8.1	TESTING SEQUENCE	421
B1	EXAMPLE OF CIRCUIT ARRANGEMENTS FOR AN ELECTRICAL INSTALLATION (TO THREE LEVELS)	440
B2	TYPICAL OVERCURRENT PROTECTION OF CONDUCTORS.	441
B3	COORDINATION OF THE CHARACTERISTICS OF CONDUCTORS AND PROTECTIVE DEVICES	442
B4	MAXIMUM DURATION OF PROSPECTIVE 50 Hz TOUCH VOLTAGE	445
B5	MEN SYSTEM (SIMPLIFIED)—SHOWING FAULT CURRENT (I_A) PATH (EARTH FAULT-LOOP)	448
B6	TYPICAL TIME/CURRENT CURVES FOR CIRCUIT-BREAKERS AND FUSES	449
D1	GUIDE TO SELECTION OF POLES/POSTS	494
D2	GUIDE TO SELECTION OF STRUTS	495
F1	TYPICAL PRIMARY SPD AT MAIN SWITCHBOARD	523
F2	TYPICAL SECONDARY SPD AT DISTRIBUTION BOARD	523
F3	EXAMPLE OF HOW A TRANSIENT DEVELOPS A HAZARDOUS VOLTAGE DIFFERENCE IN A BUILDING	525
F4	PREFERRED METHOD OF BONDING THE PRIMARY TELECOMMUNICATIONS PROTECTOR TO THE MAIN EARTH	526
G1	IP CODES	528 to 530
G2	EXAMPLE OF ‘IP’ RATING	531
H1	WSX1 PROTECTION BY LOCATION	538
J1	SYMBOLS USED IN THIS STANDARD	544
O1	TYPES OF ARC FAULT	566

auto login of Electrical Workers Licensing Group is licenced to temporarily download this document.
Electrical Workers Licensing Group may print this document but not more than 10% of the documents subscribed to may be held in printed form at any one time.

Copyright Standards Link

FIGURE *Page*

P1 CASE A CONNECTION 573
P2 CASE B CONNECTION 573
P3 CASE C CONNECTION 573

auto login of Electrical Workers Licensing Group is licenced to temporarily download this document.
Electrical Workers Licensing Group may print this document but not more than 10% of the documents subscribed to may be held in printed form at any one time.

Copyright Standards New Zealand

FOREWORD

Application of typefaces

Four different typefaces are used in this Standard. Each of these has a specific purpose as follows:

(a) **Bold print Indicates opening statements defining the fundamental principles and requirements.**

(b) Normal print In Sections 1 to 8, this indicates requirements that form the main part of a clause. It also indicates deemed to comply methods that satisfy the requirements. Normal print is used in the Appendices to present informative material for guidance only.

(c) *Italic print Indicates exceptions or variations to requirements. Exceptions generally give specific examples where the requirements do not apply or where they are varied for certain applications. They may contain requirements. Examples are also presented in italic text.*

(d) Reduced normal print Indicates Notes which give explanations and advice. They are preceded by 'NOTE' in the manner used in previous editions.

It is important not to read text in any single typeface without consulting the preceding or following paragraphs, which may contain additional or modifying requirements.

National requirements

Certain provisions of the Standard have a different application in Australia and New Zealand. The following symbols appearing in the outer margin indicate that the identified Section or Clause is:

(i) Applicable in Australia only. **A**

(ii) Applicable in New Zealand only. **NZ**

Informative appendices

An informative appendix is for information or guidance only. Informative appendices provide additional information intended to assist in the understanding or use of the Standard.

Deemed to comply

The term 'deemed to comply' means that a requirement can be met by following a specified Standard or method.

So, where an installation is carried out in accordance with the specified Standard or method, within the text of this Standard, the installation is 'deemed to comply' with the requirements of this Standard.

Conformance to a deemed to comply Standard may exceed the minimum requirements of this Standard.

auto login of Electrical Workers Licensing Group is licenced to temporarily download this document.
Electrical Workers Licensing Group may print this document but not more than 10% of the documents subscribed to may be held in printed form at any one time.

Copyright Standards New Zealand

Notes

Statements expressed in mandatory terms in notes to tables and figures are deemed to be requirements of this Standard.

Notes to text are informative and give explanations or advice. They do not form a mandatory part of this Standard.

Cross-references

Where reference to another clause has been made, such reference, unless otherwise stated, includes all appropriate subclauses and paragraphs of the clause or portion thereof referred to.

Frequently asked questions (FAQs)

Answers to FAQs can be found online at the following web address: <www.wiringrules.standards.org.au>.

Clarifications to requirements of the Wiring Rules that were covered by Rulings and Interpretations in earlier editions will be included in FAQs as the need arises. These FAQs are applicable throughout Australia and New Zealand and are developed by the Joint Standards Australia/Standards New Zealand Committee EL-001, Wiring Rules.

Provision for revision

This Standard is not intended to discourage invention or to exclude materials, equipment and methods that may be developed. Revisions will be made from time to time in view of such developments and Amendments to this edition will be made where essential.

Copyright Standards New Zealand

auto login of Electrical Workers Licensing Group is licenced to temporarily download this document.
Electrical Workers Licensing Group may print this document but not more than 10% of the documents subscribed to may be held in printed form at any one time.

STANDARDS AUSTRALIA/STANDARDS NEW ZEALAND

Australian/New Zealand Standard

Electrical installations (known as the Australian/New Zealand Wiring Rules)

Part 1: Scope, application and fundamental principles

Copyright Standards New Zealand

auto login of Electrical Workers Licensing Group is licenced to temporarily download this document.
Electrical Workers Licensing Group may print this document but not more than 10% of the documents subscribed to may be held in printed form at any one time.

SECTION 1 SCOPE, APPLICATION AND FUNDAMENTAL PRINCIPLES

1.1 SCOPE

This Standard sets out requirements for the design, construction and verification of electrical installations, including the selection and installation of electrical equipment forming part of such electrical installations.

These requirements are intended to protect persons, livestock, and property from electric shock, fire and physical injury hazards that may arise from an electrical installation that is used with reasonable care and with due regard to the intended purpose of the electrical installation.

* In addition, guidance is provided so that the electrical installation will function correctly for the purpose intended and takes into account mitigating the foreseeable adverse effects of disruption to supply.

1.2 APPLICATION

This Standard may be applied through legislative requirements, made in each state and territory of Australia and in New Zealand, concerned with the safety of electrical installations. The Standard may also be applied in conjunction with any additional requirements, exemptions or restrictions in such legislation.

The principal application of this Standard is to electrical installations in all types of premises and land used by electricity consumers. However, the Standard may also be referenced or applied through legislative or other requirements relating to the effect of electrical installations in matters such as the following:

(a) Safety of workplaces.

NOTE: For example, any relevant work health and safety legislation and associated codes.

(b) Safe design and construction of buildings.

NOTE: For example, national building codes [such as the National Construction Code (NCC), New Zealand Building Code (NZBC)] and the associated referenced Standards. See Appendix E for information on NCC and NZBC.

(c) Electricity generation, transmission and distribution systems.

(d) Safe connection to electricity distribution systems.

NOTE: For example, service rules and conditions provided by local electricity distributors.

(e) Qualifications of electricity workers.

COPYRIGHT

auto login of Electrical Workers Licensing Group is licenced to temporarily download this document.
Electrical Workers Licensing Group may print this document but not more than 10% of the documents subscribed to may be held in printed form at any one time.

Copyright Standards New Zealand

Part 1 (Section 1) of this Standard provides a mechanism for acceptance of design and installation practices that may not be addressed by those given in Part 2 (Sections 2 to 8) of this Standard. This mechanism is only intended to apply where departures from the methods in Part 2 are significant.

NOTE: A degree of flexibility exists within Part 2.

1.3 REFERENCED DOCUMENTS

See Appendix A for a list of documents referred to in this Standard.

1.4 DEFINITIONS

1.4.1 Application of definitions

Throughout this Standard, the definitions of terms given in Clauses 1.4.2 to 1.4.134 apply. Where an additional term is defined in a particular section or clause, the term has the meaning defined there. The definitions apply to both parts of this Standard.

Exception: Where the context otherwise requires, or the word or term is not specifically defined, the commonly understood meaning applies. Where the terms voltage and current are used without further qualification, they imply r.m.s. values.

1.4.2 Accessible

* **Capable of being reached for inspection, maintenance or repairs but does not include the destructive dismantling of structural components.**

1.4.3 Accessible, readily

* **Capable of being reached quickly and without climbing over or removing obstructions, or using a movable ladder, and in any case not more than 2.0 m above the ground, floor or platform.**

1.4.4 Accessory

Any device, such as a switch, fuse, plug, socket-outlet, lampholder, fitting, adaptor or ceiling rose that is associated with wiring, luminaires, switchboards or appliances; but not including the lamps, luminaires, appliances or switchboards themselves.

1.4.5 Active (or active conductor)

Any conductor that is maintained at a difference of potential from the neutral or earthed conductor. In a system that does not include a neutral or earthed conductor, all conductors are considered to be active conductors.

1.4.6 Adjacent

* **Next to or adjoining without obstruction and within arm's reach.**

COPYRIGHT

Copyright Standards New Zealand

auto login of Electrical Workers Licensing Group is licenced to temporarily download this document.
Electrical Workers Licensing Group may print this document but not more than 10% of the documents subscribed to may be held in printed form at any one time.

1.4.7 Aerial conductor

Any stranded conductor (including aerial bundled conductors) that is supported by insulators or purpose-designed fittings above the ground and is directly exposed to the weather.

Alive (see Clause 1.4.79 Live part).

1.4.8 Alteration

* **A modification to part(s) of an electrical installation.**

NOTE: Repairs are not alterations. A repair is defined in Clause 1.4.101.

1.4.9 Appliance

A consuming device, other than a lamp, in which electricity is converted into heat, motion, or any other form of energy, or is substantially changed in its electrical character.

1.4.10 Appliance, fixed

An appliance that is fastened to a support or otherwise secured in a specific location.

1.4.11 Appliance, hand-held

A portable appliance intended to be held in the hand during normal use, the motor, if any, forming an integral part of the appliance.

1.4.12 Appliance, portable

Either an appliance that is moved while in operation or an appliance that can easily be moved from one place to another while connected to the supply.

1.4.13 Appliance, stationary

Either a fixed appliance or an appliance having a mass exceeding 18 kg and not provided with a carrying handle.

1.4.14 Arc fault detection device (AFDD)

* **A device intended to mitigate the effects of arcing faults, within installation wiring and plug and lead connection of electrical equipment, by disconnecting the circuit when an arc fault is detected.**

1.4.15 Area, hazardous

Area in which an explosive atmosphere is present, or may be expected to be present, in quantities such as to require special precautions for the construction, installation and use of equipment [based on AS/NZS 60079 series].

auto login of Electrical Workers Licensing Group is licenced to temporarily download this document.
Electrical Workers Licensing Group may print this document but not more than 10% of the documents subscribed to may be held in printed form at any one time.

Copyright Standards New Zealand

1.4.16 Arm's reach

A zone extending from any point on a surface where persons usually stand or move about, to the limits that a person can reach with the hand in any direction without assistance (e.g. tools or ladder) (see Figure 1.1).

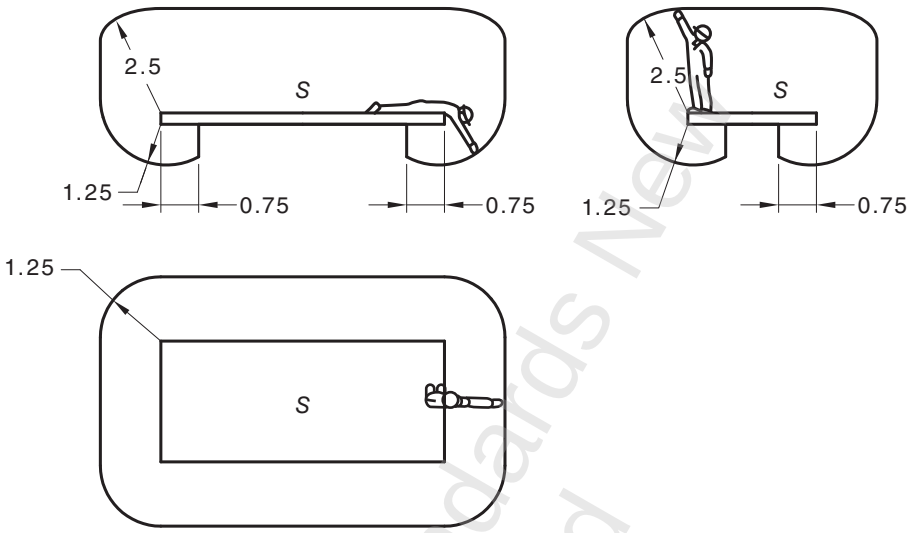

LEGEND:
S = Surface expected to be occupied by persons

DIMENSIONS IN METRES

FIGURE 1.1 ZONE OF ARM'S REACH

1.4.17 Authority, regulatory

A government agency responsible for relevant legislation and its application.

1.4.18 Authorized person

* **The person in charge of the premises, or a competent person appointed or selected by the person in charge of the premises to perform certain duties on the premises.**

1.4.19 Available, readily

Capable of being reached for inspection, maintenance or repairs without necessitating the dismantling of structural parts, cupboards, benches or the like.

1.4.20 Barrier

A part providing basic protection from any usual direction of access.

Basic insulation (see Clause 1.4.73 Insulation system).

Basic protection (see Clause 1.4.97 Protection, basic).

COPYRIGHT

auto login of Electrical Workers Licensing Group is licenced to temporarily download this document.
Electrical Workers Licensing Group may print this document but not more than 10% of the documents subscribed to may be held in printed form at any one time.

Copyright Standards New Zealand

1.4.21 Cable

A single cable core, or two or more cable cores laid up together, either with or without fillings, reinforcements, or protective coverings.

1.4.22 Cable, armoured

A cable provided with a wrapping of metal, usually tapes or wires, primarily for the purpose of mechanical protection.

1.4.23 Cable core

The conductor with its insulation but not including any mechanical protective covering.

1.4.24 Cable, flexible

A cable, the conductors, insulation and covering of which afford flexibility.

1.4.25 Cable, mineral insulated metal sheathed (MIMS)

A cable having compressed powdered mineral insulation enclosed in solid-drawn metal sheathing. Such a cable may be either single-core or multi-core.

1.4.26 Cable, neutral-screened

A cable consisting of one or more cores laid up together with or without fillers, surrounded by a concentric wire outer conductor, further protected with an insulating sheath.

1.4.27 Cable, sheathed

A cable having a core or cores surrounded by a sheath.

Cable trunking (see Clause 1.4.127 Trunking, cable).

1.4.28 Ceiling, suspended

In accordance with AS/NZS 2785, a suspended ceiling is a ceiling system hung at a distance from the floor or roof above. It does not include a nailed timber ceiling complying with AS/NZS 2589 and timber building Standards.

1.4.29 Circuit

A circuit comprises live conductors, protective conductors (if any), a protective device and associated switchgear, controlgear and accessories.

1.4.30 Circuit-breaker

A switch suitable for opening a circuit automatically, as a result of predetermined conditions, such as those of overcurrent or undervoltage, or by some form of external control.

auto login of Electrical Workers Licensing Group is licenced to temporarily download this document.
Electrical Workers Licensing Group may print this document but not more than 10% of the documents subscribed to may be held in printed form at any one time.

Copyright Standards New Zealand

auto login of Electrical Workers Licensing Group is licenced to temporarily download this document.
Electrical Workers Licensing Group may print this document but not more than 10% of the documents subscribed to may be held in printed form at any one time.

1.4.31 Class I equipment

Equipment in which protection against electric shock does not rely on basic insulation only, but which includes an additional safety precaution in that accessible conductive parts are connected to the protective earthing conductor in the electrical installation in such a way that accessible parts cannot become live in the event of a failure of the basic insulation.

NOTES:

1 Class I equipment may have parts with double insulation or parts operating at SELV.

2 For equipment intended for use with a flexible cord or cable, this provision includes a protective earthing conductor as part of the flexible cord or cable.

1.4.32 Class II equipment

Equipment in which protection against electric shock does not rely on basic insulation only, but in which additional safety precautions, such as double insulation or reinforced insulation, are provided, there being no provision for protective earthing or reliance upon installation conditions. Such equipment may be one of the following types:

(a) Equipment having durable and substantially continuous enclosures of insulating material that envelope all metal parts, with the exception of small parts, such as nameplates, screws and rivets, that are isolated from live parts by insulation at least equivalent to reinforced insulation. Such equipment is called insulation-encased Class II equipment.

(b) Equipment having a substantially continuous metal enclosure, in which double insulation is used throughout, except for those parts where reinforced insulation is used because the application of double insulation is manifestly impracticable. Such equipment is called metal-encased Class II equipment.

(c) Equipment that is a combination of the types described in Items (a) and (b).

NOTES:

1 The enclosure of insulation-encased Class II equipment may form part of the whole of the supplementary insulation or of the reinforced insulation.

2 If the equipment with double insulation or reinforced insulation throughout has an earthing terminal or earthing contact, it is considered to be of Class I construction.

3 Class II equipment may be provided with means for maintaining the continuity of protective circuits, insulated from accessible conductive parts by double insulation or reinforced insulation.

4 Class II equipment may have parts operating at SELV.

Copyright Standards New Zealand

auto login of Electrical Workers Licensing Group is licenced to temporarily download this document.
Electrical Workers Licensing Group may print this document but not more than 10% of the documents subscribed to may be held in printed form at any one time.

1.4.33 Class III equipment

Equipment in which protection against electric shock relies on supply at SELV and in which voltages higher than those of SELV are not generated.

NOTE: Equipment intended to be operated at SELV and which has internal circuits that operate at a voltage other than SELV, is not included in the classification and is subject to additional requirements.

1.4.34 Competent person

A person, who has acquired, through training, qualification or experience or a combination of these, the knowledge and skill enabling that person to perform the required task correctly.

1.4.35 Conductor

A wire or other form of conducting material suitable for carrying current, but not including wire or other metallic parts directly employed in converting electrical energy into another form.

1.4.36 Conductor, bare

A conductor without covering or insulation.

1.4.37 Consumer mains

Those conductors between the point of supply and the main switchboard.

1.4.38 Contact, direct

Contact with a conductor or conductive part that is live in normal service (see Figure 1.2 and Clause 1.4.97 Protection, basic).

1.4.39 Contact, indirect

Contact with a conductive part that is not normally live but has become live under fault conditions (because of insulation failure or some other cause) (see Figure 1.3 and Clause 1.4.98 Protection, fault).

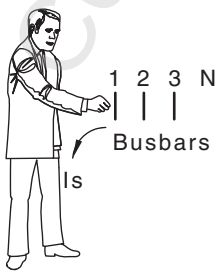

Is: touch current

(Basic protection required)

FIGURE 1.2 DIRECT CONTACT

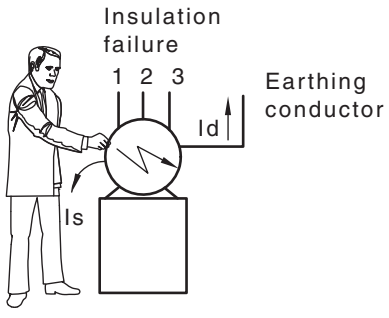

Is: touch current
Id: fault current

(Fault protection required)

FIGURE 1.3 INDIRECT CONTACT

Copyright Standards New Zealand

auto login of Electrical Workers Licensing Group is licenced to temporarily download this document.
Electrical Workers Licensing Group may print this document but not more than 10% of the documents subscribed to may be held in printed form at any one time.

1.4.40 Cord, flexible

A flexible cable, no wire of which exceeds 0.31 mm diameter and no conductor of which exceeds 4 mm^2 cross-sectional area, and having not more than five cores.

1.4.41 Current, fault

A current resulting from an insulation failure or from the bridging of insulation.

1.4.42 Current, overload

An overcurrent occurring in a circuit that is electrically sound.

1.4.43 Current, short-circuit

A fault current resulting from a fault of negligible impedance between live conductors having a difference in potential under normal operating conditions. The fault path may include the path from active via earth to the neutral.

NOTE: This current is also referred to as 'prospective short-circuit current' or a 'bolted fault'. It is the maximum value, at the relevant points for the existing installation. Unless otherwise stated, it is the three-phase r.m.s. value.

1.4.44 Damp situation

A situation in which moisture is either permanently present, or intermittently present to such an extent as would be likely to impair the effectiveness or safety of an electrical installation that complies with this Standard for ordinary situations.

1.4.45 De-energized

* **Separated from all sources of supply, but not necessarily isolated, earthed or out of commission.**

[Source: AS/NZS 4836]

Degree of protection (see Clause 1.4.70 IP Classification).

Direct contact (see Clause 1.4.38 Contact, direct).

1.4.46 Distribution board

A switchboard other than a main switchboard.

Distributor, electricity (see Clause 1.4.57 Electricity distributor).

Domestic electrical installation (see Clause 1.4.53 Electrical installation, domestic).

Double insulation (see Clause 1.4.73 Insulation system).

1.4.47 Earthed

Connected to the general mass of earth, and where relevant, the supply neutral in accordance with the appropriate requirements of this Standard.

Copyright Standards New Zealand

auto login of Electrical Workers Licensing Group is licenced to temporarily download this document.
Electrical Workers Licensing Group may print this document but not more than 10% of the documents subscribed to may be held in printed form at any one time.

1.4.48 Earthed situation

A situation wherein there is a reasonable chance of a person touching exposed conductive parts and, at the same time, coming into contact with earth or with any conducting medium that may be in electrical contact with the earth or through which a circuit may be completed to earth. The following situations are deemed to be earthed situations:

(a) Within 2.5 m in any direction from a conductive floor (such as earthen, concrete, tile or brickwork flooring), permanently damp surface, metallic conduit or pipe, metallic cable sheath or armour, or any other conductive material on which a person may stand.

(b) External to a building.

Exception: An isolated piece of equipment, such as a luminaire that is mounted more than 2.5 m from the ground and from any exposed conductive part or other conductive material that is in contact with earth, is not deemed to be in an earthed situation.

(c) Within 2.5 m of the ground, floor or platform in rooms containing socket-outlets, the earthing terminals of which are earthed, and where there is a reasonable chance of a person making simultaneous contact with any exposed conductive part of electrical equipment and any exposed conductive part of an appliance connected to any of the socket-outlets.

(d) All parts of a bathroom, laundry, lavatory, toilet or kitchen.

1.4.49 Earth fault-loop impedance

The impedance of the earth fault-current loop (active-to-earth loop) starting and ending at the point-of-earth fault.

NOTE: Clause 5.7 provides a description of the constituent parts of an earth fault-current loop.

Earthing conductor

(see Clause 1.4.81 Main earthing conductor).

(see Clause 1.4.100 Protective earthing conductor).

1.4.50 Electrical equipment

Wiring systems, switchgear, controlgear, accessories, appliances, luminaires and fittings used for such purposes as generation, conversion, storage, transmission, distribution or utilization of electrical energy.

1.4.51 Electrical fault

An electrical failure, defect or flaw in an electrical circuit, equipment, fixture or fitting and any situation resulting in an unintentional—

* **(a) loss, reduction or increase of current or voltage;**

(b) voltage exceeding the maximum of the rated voltage;

COPYRIGHT

(c) overcurrent; or

(d) arcing fault current.

1.4.52 Electrical installation

Electrical equipment installed for the purposes of conveyance, control, measurement or use of electricity, where electricity is or is to be supplied for consumption. Includes electrical equipment supplied from a distributor's system or a private generating system.

NOTES:

1 An electrical installation usually commences at the point of supply and finishes at a point (in wiring) but does not include portable or stationary electrical equipment connected by plug and socket-outlet (other than where a socket-outlet is used to connect sections of the fixed installation).

2 Unless the context otherwise requires, the term 'installation' is used to mean electrical installation.

1.4.53 Electrical installation, domestic

An electrical installation in a private dwelling or that portion of an electrical installation associated solely with a flat or living unit.

1.4.54 Electrical installation, multiple

An electrical installation incorporating—

(a) a number of domestic electrical installations; or

(b) a number of non-domestic electrical installations; or

(c) any combination of domestic and non-domestic electrical installations.

1.4.55 Electrical installation, residential

* **An electrical installation or that portion of an electrical installation associated with a living unit or units.**

Example: Residential institutions, hotels, boarding houses, hospitals, accommodation houses or motels.

1.4.56 Electric vehicle (EV)

* **Any vehicle propelled by an electric motor drawing current from a rechargeable storage battery, which is manufactured primarily for use on public or private streets, roads or highways.**

NOTE: Electric vehicles are all road vehicles, including plug-in hybrid road vehicles (PHEV) that derive all or part of their energy from on-board batteries (see AS IEC 62196.2).

1.4.57 Electricity distributor

Any person or organization that provides electricity from an electricity distribution system to one or more electrical installations. Includes distributor, supply authority, network operator, local network service

COPYRIGHT

auto login of Electrical Workers Licensing Group is licenced to temporarily download this document.
Electrical Workers Licensing Group may print this document but not more than 10% of the documents subscribed to may be held in printed form at any one time.

Copyright Standards New Zealand

provider, electricity retailer or electricity entity, as may be appropriate in the relevant jurisdiction.

1.4.58 Enclosure

A part providing an appropriate degree of protection of equipment against external influences and against contact with live parts.

NOTE: AS 60529 and Appendix G provide further information on appropriate degrees of protection.

1.4.59 Energized

Connected to a source of electrical supply.

* [Source: AS/NZS 4836]

Equipment, electrical (see Clause 1.4.50 Electrical equipment).

Equipment wiring (see Clause 1.4.131 Wiring, equipment).

1.4.60 Equipotential bonding

Electrical connections intended to bring exposed conductive parts or extraneous conductive parts to the same or approximately the same potential, but not intended to carry current in normal service.

1.4.61 Explosive atmosphere

Mixture with air, under atmospheric conditions, of flammable substances in the form of gas, vapour, dust, fibres, or flyings that, after ignition, permits self-sustaining propagation.

[Source: AS/NZS 60079.0]

1.4.62 Exposed conductive part

A conductive part of electrical equipment that—

(a) can be touched with the standard test finger as specified in AS/NZS 3100; and

(b) is not a live part but can become live if basic insulation fails.

Exceptions: The term 'exposed conductive part' does not apply to any of the following:

1 Conductive parts within an enclosure where the parts cannot be touched unless a key or a tool is required to remove the covers of the enclosure.

2 Conductive parts within electrical equipment where the parts cannot be touched in normal use and during the movement of the electrical equipment, because of its configuration and size.

3 Conductive parts that are effectively and permanently separated from live parts by—

- *double insulation; or*
- *other conductive parts that are earthed.*

COPYRIGHT

Copyright Standards New Zealand

auto login of Electrical Workers Licensing Group is licenced to temporarily download this document.
Electrical Workers Licensing Group may print this document but not more than 10% of the documents subscribed to may be held in printed form at any one time.

4 Conductive parts that are in the form of nameplates, screw heads, covers and similar attachments that cannot become live in the event of failure of insulation of live parts because of the manner in which they are supported and fixed.

5 A removable or hinged conductive panel fitted to a switchboard or other enclosure containing conductors that are so located and/or restrained that, in the event of any conductor becoming detached from a terminal or mounting, the conductor is incapable of making contact with the panel.

1.4.63 Extraneous conductive part

A conductive part that does not form part of an electrical installation but that may be at the electrical potential of a local earth.

NOTE: Examples of extraneous conductive parts include the following:

(a) Metal waste, water or gas pipe from outside.
(b) Cooling or heating system parts.
(c) Metal or reinforced concrete building components.
(d) Steel-framed structure.
(e) Floors and walls of reinforced concrete without further surface treatment.
(f) Tiled surfaces, conductive wall coverings.
(g) Conductive fittings in washrooms, bathrooms, lavatories, toilets, etc.
(h) Metallized papers.

Fault current (see Clause 1.4.41 Current, fault).

1.4.64 Fault-current limiter

A circuit-opening device designed or selected to limit the instantaneous fault current.

Fault protection (see Clause 1.4.98 Protection, fault).

Final subcircuit (see Clause 1.4.115 Subcircuit, final).

1.4.65 Fire mode

* **A specific mode of operation for building systems that is instigated by a fire alarm being activated within the building.**

Flexible cord (see Clause 1.4.40 Cord, flexible).

1.4.66 Functional earthing (FE)

An earthing arrangement provided to ensure correct operation of electrical equipment or to permit reliable and proper functioning of electrical installations.

NOTE: 'Clean' (low-noise) earths provided for electrical equipment may be considered as FE. Clause 5.2.2 provides further information on FE.

auto login of Electrical Workers Licensing Group is licenced to temporarily download this document.
Electrical Workers Licensing Group may print this document but not more than 10% of the documents subscribed to may be held in printed form at any one time.

Copyright Standards New Zealand

1.4.67 Functional unit

Part of a switchboard assembly comprising all the electrical and mechanical elements that contribute to the fulfilment of the same function.

* NOTE: Conductors connected to a functional unit that are external to its compartment or enclosed protected space (e.g. auxiliary cables connected to a common compartment) are not considered to form part of the functional unit.

[Source: AS/NZS 61439 series]

1.4.68 Fuse

A device for protecting a circuit against damage from an excessive current flowing in it by opening the circuit on the melting of the fuse-element by such excessive current. The fuse comprises all the parts that form the protective device.

Hazardous areas (see Clause 1.4.15 Area, hazardous).

Indirect contact (see Clause 1.4.39 Contact, indirect).

1.4.69 Informative

For information and guidance only.

1.4.70 Ingress protection (IP) classification

A degree of protection in accordance with AS 60529.

NOTE: Further information is provided in Appendix G.

1.4.71 Installation coupler

A connecting device, in accordance with AS/NZS 61535, consisting of an installation socket and an installation plug designed for permanent connection and not intended to be engaged or disengaged under load (see also Clause 4.3.2.2).

Installation, electrical (see Clause 1.4.52 Electrical installation).

Installation wiring (see Clause 1.4.132 Wiring, installation).

1.4.72 Insulated

Separated from adjacent conducting material by a non-conducting substance or airspace permanently providing resistance to the passage of current, or to disruptive discharges through or over the surface of the substance or space, to obviate danger of shock or injurious leakage of current.

1.4.73 Insulation system

NOTE: The term ‘insulation system’ does not mean that the insulation has to be one homogenous piece. It may comprise several layers that cannot be tested separately as supplementary or basic insulation.

auto login of Electrical Workers Licensing Group is licenced to temporarily download this document.
Electrical Workers Licensing Group may print this document but not more than 10% of the documents subscribed to may be held in printed form at any one time.

Copyright Standards New Zealand

One, or a combination of, the following:

(a) ***Basic insulation*** **The insulation applied to live parts, to provide basic protection against electric shock.**

NOTE: Basic insulation does not necessarily include insulation used exclusively for functional purposes.

(b) ***Supplementary insulation*** **An independent insulation applied in addition to basic insulation in order to ensure protection against electric shock in the event of a failure of the basic insulation.**

(c) ***Double insulation*** **Insulation comprising both basic insulation and supplementary insulation.**

NOTE: Sheathed cables in accordance with the AS/NZS 5000 series, sheathed flexible cords in accordance with AS/NZS 3191 other than the 'light duty' type, and sheathed neutral-screened cables in accordance with AS/NZS 4961 are deemed to provide double insulation between the conductors of the cable and any conductive material in contact with the cable. The use of flexible cords of the 'light duty' type as supply flexible cords is covered in equipment Standards.

(d) ***Reinforced insulation*** **A single insulation system applied to live parts that provides a degree of protection against electric shock, equivalent to double insulation under conditions specified in AS/NZS 3100.**

NOTE: Aerial bundled cables in accordance with AS/NZS 3560 are deemed to provide reinforced insulation.

1.4.74 Isolated

* Separated from all possible sources of electrical energy (supply) and rendered incapable of being energized unintentionally.

[Source: AS/NZS 4836]

1.4.75 Isolation (Isolating function)

Function intended to cut off the supply from the whole installation, or a discrete section of it, by separating it from every source of electrical energy for reasons of safety.

1.4.76 Lamp

* **A bulb, tube or similar item that emits light produced by electricity.**

1.4.77 Lift

* **An apparatus or contrivance within or attached to a building or structure, comprising a platform or car running between approximately vertical guides that are capable of raising or lowering persons. This does not include hoists, dumb waiters, escalators or travelators.**

auto login of Electrical Workers Licensing Group is licenced to temporarily download this document.
Electrical Workers Licensing Group may print this document but not more than 10% of the documents subscribed to may be held in printed form at any one time.

Copyright Standards New Zealand

1.4.78 Live

* **Energized or subject to hazardous induced or capacitive voltages.**

[Source: ENA-014]

1.4.79 Live part

A conductor or conductive part intended to be energized in normal use, including a neutral conductor and conductive parts connected to a neutral conductor.

A1 *Exceptions: Under the multiple earthed neutral (MEN) earthing system this term does not apply to the following:*

1 Earthing conductors.

2 The MEN connection and the neutral bar or link at which the MEN connection is made.

3 The neutral bar or link in a switchboard without an MEN connection where the active supply to the switchboard has been isolated.

4 The sheath of an MIMS cable and associated conductive fittings used as a combined protective earthing and neutral (PEN) conductor in an earth sheath return (ESR) system.

5 Conductive supports and enclosures associated with an unprotected consumers mains that are earthed in accordance with Clause 5.5.3.5.

6 A submain neutral conductor or final subcircuit neutral conductor where the active supply to the submain or final subcircuit has been isolated.

1.4.80 Luminaire (Light fitting)

A complete lighting assembly intended to distribute, filter, or transform the light from one or more lamps, together with such components as ancillary and auxiliary equipment, shades, diffusers, reflectors, and accessories. Such an assembly includes the means of connection to supply circuit wiring, internal and interconnecting wiring, and any associated housings. A lampholder that is not incorporated in an assembly is not regarded as a luminaire.

1.4.81 Main earthing conductor

A conductor connecting the main earthing terminal/connection or bar to the earth electrode or to the earthing system of the source of supply.

1.4.82 Main switch

* **A switch, the primary function of which is the isolation of a supply of electricity to the electrical installation. This device may also fulfil regulatory requirements provided it is labelled accordingly.**

auto login of Electrical Workers Licensing Group is licenced to temporarily download this document.
Electrical Workers Licensing Group may print this document but not more than 10% of the documents subscribed to may be held in printed form at any one time.

Copyright Standards New Zealand

1.4.83 Multiple earthed neutral (MEN) system

* **A system of earthing in which the parts of an installation, required under this Standard to be earthed, are connected to the general mass of earth and, in addition, are connected within the installation to the neutral conductor of the supply system or the PEN conductor.**

Within the installation, the protective earthing conductor is separated from the neutral conductor.

Multiple electrical installation (see Clause 1.4.54 Electrical installation, multiple).

1.4.84 Neutral (Neutral conductor or mid-wire)

The conductor of a three-wire or multi-wire system that is maintained at an intermediate and approximately uniform potential in respect of the active or outer conductors, or the conductor of a two-wire system that is connected to earth at its origin.

1.4.85 Neutral earthed system

* **A system where the protective earth and neutral conductors from the transformer or generator to the electrical installation are not connected together at any point after the neutral and earth connection at the transformer or generator.**

Neutral-screened cable (see Clause 1.4.26 Cable, neutral-screened).

1.4.86 Normative

* **A term used to describe an element of a Standard to which it is necessary to conform in order to be able to claim compliance with the Standard.**

1.4.87 Obstacle

A part preventing unintentional direct contact, but not preventing direct contact by deliberate action.

1.4.88 Outbuilding—Individual

A structure containing a switchboard that is separated by an area of land from the structure containing the switchboard that supplies it.

1.4.89 Outbuilding—Combined

* **Any number of structures installed or built on the same foundation, or sharing conductive metal roofing or conductive metal frames, with more than one electrical supply, and separated by an area of land from another structure that contains the switchboard from which those electrical supplies are obtained.**

auto login of Electrical Workers Licensing Group is licenced to temporarily download this document.
Electrical Workers Licensing Group may print this document but not more than 10% of the documents subscribed to may be held in printed form at any one time.

Copyright Standards New Zealand

1.4.90 Overcurrent

A current exceeding the rated value of electrical equipment.

NOTE: For conductors, the rated value is the current-carrying capacity.

Overload current (see Clause 1.4.42 Current, overload).

1.4.91 Plug

A device intended for insertion into a socket-outlet, cord-extension socket or plug-socket adaptor to make a detachable connection between the contacts of any such accessory and the conductors of a flexible cord or flexible cable.

1.4.92 Point (in wiring)

A termination of installation wiring, intended for the connection of electricity consuming equipment.

1.4.93 Point of attachment

The point at which aerial conductors of a service line or aerial consumer mains are terminated on a consumer's structure.

1.4.94 Point of entry

The point at which the consumer mains or the underground service cable enters a structure.

1.4.95 Point of supply

The junction of the consumer mains with—

(a) conductors of an electricity distribution system; or

(b) output terminals of an electricity generating system within the premises.

1.4.96 Protected extra-low voltage (PELV)

An extra-low voltage system that is not electrically separated from earth, but that otherwise satisfies all the requirements for SELV.

1.4.97 Protection, basic

Protection against dangers that may arise from direct contact with live parts of the installation (see Figure 1.2 and Clause 1.4.38 Contact, direct).

1.4.98 Protection, fault

Protection against dangers that may arise from indirect contact with live parts of the installation (contact with an exposed conductive part that is not normally live but has become live under fault conditions) (see Figure 1.3 and Clause 1.4.39 Contact, indirect).

1.4.99 Protective earth neutral (PEN)

* **Neutral and protective earth functions combined in a single conductor.**

auto login of Electrical Workers Licensing Group is licenced to temporarily download this document.
Electrical Workers Licensing Group may print this document but not more than 10% of the documents subscribed to may be held in printed form at any one time.

Copyright Standards New Zealand

auto login of Electrical Workers Licensing Group is licenced to temporarily download this document.
Electrical Workers Licensing Group may print this document but not more than 10% of the documents subscribed to may be held in printed form at any one time.

1.4.100 Protective earthing conductor

An earthing conductor, other than a main earthing conductor, intended to carry earth fault currents and connecting any portion of the earthing system to the portion of the electrical installation or electrical equipment required to be earthed, or to any other portion of the earthing system.

RCD [see Clause 1.4.102 Residual current device (RCD)].

Readily accessible (see Clause 1.4.3 Accessible, readily).

Readily available (see Clause 1.4.19 Available, readily).

Regulatory authority (see Clause 1.4.17 Authority, regulatory).

Reinforced insulation (see Clause 1.4.73 Insulation system).

1.4.101 Repair

* **The work to restore the electrical installation to safe and sound working condition after deterioration or damage has occurred.**

1.4.102 Residual current device (RCD)

A device intended to isolate supply to protected circuits, socket-outlets or electrical equipment in the event of a current flow to earth that exceeds a predetermined value.

1.4.103 Ripple-free d.c.

For sinusoidal ripple voltage, a ripple content not exceeding 10% r.m.s.

NOTE: The maximum peak value does not exceed 140 V for a nominal 120 V ripple-free d.c. system and 70 V for a nominal 60 V ripple-free d.c. system.

1.4.104 Safety service

* **A system or component that operates to identify an emergency, or is intended to operate during an emergency, and is primarily associated with the safety of persons evacuating a building, fire-fighting operations or fire suppression.**

Safety services include the following:

(a) Fire detection, warning and extinguishing systems.

(b) Smoke control systems.

(c) Evacuation systems.

(d) Emergency lifts.

NOTE: For the definition of a ‘fire safety system’ refer to the National Construction Code (Australia) and ‘essential service’ in the New Zealand Building Code.

Copyright Standards New Zealand

auto login of Electrical Workers Licensing Group is licenced to temporarily download this document.
Electrical Workers Licensing Group may print this document but not more than 10% of the documents subscribed to may be held in printed form at any one time.

1.4.105 Separated extra-low voltage (SELV)

An extra-low voltage system that is electrically separated from earth and from other systems in such a way that a single fault cannot give rise to the risk of electric shock.

1.4.106 Service protective device

A fuse or circuit-breaker installed as required by the electricity distributor for interrupting the supply to an electrical installation on a consumer's premises from the supply main.

1.4.107 Shall

Indicates a statement is mandatory.

1.4.108 Should

Indicates a recommendation.

1.4.109 Socket, cord-extension

A device, arranged for attachment to a flexible cord, having contacts whereby a detachable connection may be made with the pins of a plug.

1.4.110 Socket-outlet

A device for fixing or suspension at a point, and having contacts intended for making a detachable connection with the contacts of a plug. The term 'socket-outlet' is deemed to include a cord-extension socket attached to a flexible cord that is permanently connected to installation wiring.

1.4.111 Socket-outlet—Multiple combination

* **A socket-outlet having two or more sets of contacts intended for making detachable connections with the contacts of two or more plugs.**

1.4.112 Socket residual current device (SRCD)

* **An SRCD is either a fixed socket-outlet—**

(a) with an integral RCD; or

(b) with a separate RCD intended to be associated with the socket-outlet and mounted adjacent to the socket-outlet.

The RCD may be with or without overcurrent protection.

An SRCD may have feed through facility to enable RCD protection of downstream socket-outlets.

Refer to IEC 62640 or the requirements of AS/NZS 3190 and AS/NZS 3112.

1.4.113 Soft wiring

* **A wiring system using installation couplers installed as a subcircuit or a part of a subcircuit in an installation.**

COPYRIGHT

auto login of Electrical Workers Licensing Group is licenced to temporarily download this document.
Electrical Workers Licensing Group may print this document but not more than 10% of the documents subscribed to may be held in printed form at any one time.

1.4.114 Source of supply

Where used in relation to any electrical installation, the generator, converter, transformer, etc., or group of generators, converters, or transformers, to which the supply mains conveying electricity to that particular electrical installation are connected and that generates, converts, or transforms the electrical energy so supplied to that electrical installation.

1.4.115 Subcircuit, final

A circuit originating at a switchboard and to which only consuming devices or points will be connected. The origin of a final subcircuit is deemed to be at the connecting devices of the neutral bar or link or at the load terminals of the circuit protective devices provided within or on a switchboard specifically for the connection of the circuit. The termination of a final subcircuit is deemed to be at the supply terminals of consuming devices or points.

1.4.116 Submains

A circuit originating at a switchboard to supply another switchboard. The origin of the submains is deemed to be at the connecting devices of the neutral bar or link or at the load terminals of the circuit protective devices provided within or on a switchboard specifically for the connection of the submains. The termination of the submains is deemed to be at the supply terminals of the other switchboard.

1.4.117 Substation

An assembly of electrical equipment at one place, including any necessary housing, for the conversion or transformation of electric energy or for connection between two or more circuits.

NOTE: Measurement transformers and protection transformers are not considered to be transformers for the purpose of this Standard.

Supplementary insulation (see Clause 1.4.73 Insulation system).

1.4.118 Supply, alternative

* **A supply system intended to maintain the functioning of an electrical installation or a part or parts thereof, in case of interruption of the normal supply.**

1.4.119 Supply, normal

* **The source of supply that the electrical installation is supplied from under normal conditions of operation.**

NOTE: The normal supply is usually from a distribution network, but may instead be from a generation system.

1.4.120 Supply, supplementary

* A supply system intended to operate in conjunction with the normal supply.

COPYRIGHT

Suspended ceiling (see Clause 1.4.28 Ceiling, suspended).

1.4.121 Switchboard

An assembly of circuit protective devices, with or without switchgear, instruments or connecting devices, suitably arranged and mounted for distribution to, and protection of, one or more submains or final subcircuits, or a combination of both.

1.4.122 Switchboard, main

A switchboard from which the supply to the whole electrical installation can be controlled.

1.4.123 Switchgear

Equipment for controlling the distribution of electrical energy, or for controlling or protecting circuits, machines, transformers, or other equipment.

1.4.124 Touch current

Electric current that passes through a human body, or an animal body, when that body touches one or more accessible parts of electrical equipment or an electrical installation, under normal conditions or fault conditions.

1.4.125 Touch voltage

Voltage appearing between simultaneously accessible parts.

NOTES:

1 This term is used only in connection with fault protection.

2 In certain cases the value of the touch voltage may be appreciably influenced by the impedance of the person or livestock in contact with these parts.

1.4.126 Track system

A system of enclosed wiring comprising conductors spaced apart by, or supported on, insulating material within a channel and having plug-in facilities along its length.

Exception: This definition does not apply to busbar trunking systems (busways) complying with either AS/NZS 61439.6 or AS/NZS 3439.2.

1.4.127 Trunking, cable

A trunk or trough for housing and protecting electrical cables and conductors.

1.4.128 Voltage

Differences of potential normally existing between conductors or between conductors and earth as follows:

(a) *Extra-low voltage* Not exceeding 50 V a.c. or 120 V ripple-free d.c.

COPYRIGHT

Copyright Standards New Zealand

auto login of Electrical Workers Licensing Group is licenced to temporarily download this document.
Electrical Workers Licensing Group may print this document but not more than 10% of the documents subscribed to may be held in printed form at any one time.

(b) *Low voltage* Exceeding extra-low voltage, but not exceeding 1000 V a.c. or 1500 V d.c.

(c) *High voltage* Exceeding low voltage.

1.4.129 Wiring, catenary

A system of wiring consisting of a cable or cables attached at intervals to a suitable support that is suspended between two points.

1.4.130 Wiring enclosure

A pipe, tube, duct, conduit or cable trunking, fixed or supported in position in accordance with the appropriate requirements of this Standard, for the housing or protection of sheathed or unsheathed cables.

1.4.131 Wiring, equipment

All wiring of an appliance or item of electrical equipment, provided with supply terminals for the purpose of connection to an electrical installation.

1.4.132 Wiring, installation

A system of wiring in which cables are fixed or supported in position in accordance with the appropriate requirements of this Standard.

1.4.133 Wiring systems

* **An assembly made up of one or more conductors, cables or busbars and the parts that secure their fixing and, if necessary, their mechanical protection.**

1.4.134 Wiring, underground

A system of installation wiring in which cables are buried in soil, either directly or in a wiring enclosure beneath the surface of the ground, in accordance with the appropriate requirements of this Standard.

1.5 FUNDAMENTAL PRINCIPLES

1.5.1 Protection against dangers and damage

The requirements of this Standard are intended to ensure the safety of persons, livestock, and property against dangers and damage that may arise in the reasonable use of electrical installations.

In electrical installations, the three major types of risk are listed below, along with applicable requirements:

(a) *Shock current* Shock current arising from contact with parts that are live in normal service (direct contact) and contact with parts that become live under fault conditions (indirect contact).

auto login of Electrical Workers Licensing Group is licenced to temporarily download this document.
Electrical Workers Licensing Group may print this document but not more than 10% of the documents subscribed to may be held in printed form at any one time.

Copyright Standards New Zealand

NOTES:

1 A ‘shock current’ is an electric current of sufficient magnitude and duration to cause an electric shock. AS/NZS 60479 provides further information on the effects of shock current through the human body.

2 Protection under normal conditions, designated as ‘basic protection’ (direct contact) is defined in Clause 1.4.97.

3 Protection under fault conditions, designated as ‘fault protection’ (indirect contact) is defined in Clause 1.4.98.

(b) *Excessive temperatures* Excessive temperatures likely to cause burns, fires and other damaging effects.

Persons, fixed equipment, and fixed materials adjacent to electrical equipment shall be protected against harmful effects of heat developed by electrical equipment, or thermal radiation, particularly the following effects:

(i) Combustion or degradation of materials.

(ii) Risk of burns.

(iii) Impairment of the safe function of installed equipment.

(c) *Explosive atmospheres* Equipment installed in areas where explosive gases or dusts may be present shall provide protection against the ignition of such gases or dusts.

1.5.2 Control and isolation

Electrical installations shall be provided with control and isolation devices to prevent or remove hazards associated with the electrical installation and to allow maintenance of electrical equipment.

This may incorporate a device that effectively isolates the equipment from all sources of supply external to the equipment.

The control of safety services shall be arranged so that the control devices are separate from the control of other equipment and are not unintentionally interrupted by the operation of other equipment.

An isolation device shall interrupt all active conductors and may be required to operate in a neutral conductor.

NOTE: Clause 2.3.2.1.1 contains requirements for the operation of isolation devices in neutral conductors.

An isolation device or switch shall not interrupt an earthing conductor or a combined protective earthing and neutral (PEN) conductor.

1.5.3 Protection against electric shock

1.5.3.1 *General*

Protection shall be provided against shock current arising from contact with parts that are live in normal service or parts that become live under fault conditions.

COPYRIGHT

Copyright Standards New Zealand

auto login of Electrical Workers Licensing Group is licenced to temporarily download this document.
Electrical Workers Licensing Group may print this document but not more than 10% of the documents subscribed to may be held in printed form at any one time.

A2 Live parts shall not be accessible without the use of a tool or a key, either under normal conditions or under single fault conditions.

Clauses 1.5.4, 1.5.5, 1.5.6 and 1.5.7 specify requirements regarding protection against electric shock including basic protection and fault protection.

They also deal with the application of these requirements in relation to external influences, such as damp situations.

1.5.3.2 *Methods of protection*

Protection, under normal conditions, is provided by basic protective provisions and protection under single fault conditions is provided by fault protective provisions. Alternatively, protection against electric shock is provided by an enhanced protective provision that provides protection under normal conditions and under single fault conditions.

A method of protection shall consist of—

(a) an appropriate combination of a provision for basic protection and an independent provision for fault protection; or

(b) an enhanced protective provision that provides both basic protection and fault protection.

NOTE: An example of an enhanced method of protection is the use of extra-low voltage or of reinforced insulation.

Additional protection is specified as part of a method of protection under certain conditions of external influences and in certain special locations.

NOTE: Sections 6 and 7 provide guidance on conditions and special locations requiring additional protection.

Different methods of protection applied to the same installation or part of an installation or within equipment shall have no influence on each other such that failure of one method of protection could impair the other methods of protection.

1.5.4 Basic protection

1.5.4.1 *General*

Protection shall be provided against dangers that may arise from contact with parts of the electrical installation that are live in normal service.

1.5.4.2 *Methods of protection*

Basic protection shall be provided by one or any combination of the following methods:

(a) Insulation, in accordance with Clause 1.5.4.3.

(b) Barriers or enclosures, in accordance with Clause 1.5.4.4.

(c) Obstacles, in accordance with Clause 1.5.4.5.

COPYRIGHT

auto login of Electrical Workers Licensing Group is licenced to temporarily download this document.
Electrical Workers Licensing Group may print this document but not more than 10% of the documents subscribed to may be held in printed form at any one time.

Copyright Standards New Zealand

(d) Placing out of reach, in accordance with Clause 1.5.4.6.

RCDs are not recognized as a sole means of basic protection against contact with live parts but may be used to augment one of the above methods.

1.5.4.3 *Protection by insulation*

Live parts shall be completely covered with insulation capable of withstanding the mechanical, chemical, electrical and thermal influences to which they may be subjected in service, and that can only be removed by destruction.

NOTE: Paints, varnishes, enamels or similar products alone are not generally considered as providing adequate insulation for basic protection.

For commercially manufactured electrical equipment, the insulation shall comply with the relevant Standard for the electrical equipment.

1.5.4.4 *Protection by barriers or enclosures*

(a) *Degree of protection* Live parts shall be inside enclosures or behind barriers that provide a degree of protection of at least—

(i) IPXXB or IP2X; and

(ii) IP4X for horizontal top surfaces that are readily accessible.

* The IP rating shall suit the environmental conditions and the relevant mounting position as specified by the manufacturer.

NOTE: This applies in particular to parts of enclosures that might serve as—

(a) a floor; or

(b) a surface where objects on surrounding surfaces may be displaced into openings.

Larger openings are allowable in electrical equipment where they may be necessary for the proper operation and functioning of electrical equipment, or where they are required for the replacement of parts, such as lamps or fuses. In such cases—

(A) suitable precautions shall be taken to prevent unintentional contact with live parts; and

(B) as far as practicable, persons shall be advised that live parts can be touched through the opening and are not to be touched intentionally.

(b) *Constructional requirements* Barriers and enclosures shall be firmly secured in place and shall have adequate stability and strength to withstand any appreciable distortion that might be caused by the stresses likely to occur in normal operation, including external influences, so that the required degrees of protection and separation from live parts are maintained.

auto login of Electrical Workers Licensing Group is licenced to temporarily download this document.
Electrical Workers Licensing Group may print this document but not more than 10% of the documents subscribed to may be held in printed form at any one time.

Copyright Standards New Zealand

The removal of barriers, opening of enclosures, or withdrawal of parts of enclosures (doors, casings, lids, covers and the like) shall not be possible.

Exception: The removal of barriers is permitted where one of the following conditions apply:

1 The use of a key or tool is required.

NOTE: Electrical equipment complying with an appropriate Standard that allows the removal of barriers or enclosures by an alternative method is not prohibited.

2 An interlocking device is fitted that requires—

- *switching off, or automatic disconnection, of the supply to all live parts protected by the barrier or enclosure that might be touched accidentally during or after the removal, opening or withdrawal process; and*
- *the barrier or enclosure to be replaced or closed before the supply can normally be switched on.*

NOTE: Account should be taken of danger that may exist from the stored energy of power capacitors in electrical equipment or the capacitive effect of electrical equipment, such as busways, that have been isolated from the supply.

3 An intermediate barrier is provided that—

- *prevents contact with all live parts when the barrier or enclosure is removed;*
- *is permanently in position, or arranged so that it is automatically put in position when the barrier or enclosure is removed; and*
- *requires the use of a key or tool to remove.*

1.5.4.5 *Protection by obstacles*

The method of protection by obstacles shall only be used in installations where access is restricted to—

(a) competent persons; or

(b) persons under the supervision of competent persons.

Obstacles shall prevent either—

(i) unintentional bodily approach to live parts; or

(ii) unintentional contact with live parts during the operation of live electrical equipment in normal service.

Obstacles may be removed without the use of a key or tool but shall be secured to prevent unintentional removal.

COPYRIGHT

Copyright Standards New Zealand

auto login of Electrical Workers Licensing Group is licenced to temporarily download this document.
Electrical Workers Licensing Group may print this document but not more than 10% of the documents subscribed to may be held in printed form at any one time.

NOTE: Obstacles are intended to prevent unintentional contact with live parts but not intentional contact by deliberate circumvention of the obstacle.

1.5.4.6 *Protection by placing out of reach*

The method of protection 'by placing out of reach' shall only be used in installations where access is restricted to—

(a) competent persons; or

(b) persons under the supervision of competent persons.

Simultaneously accessible parts at different voltages shall not be within arm's reach.

NOTES:

1 Two parts are deemed to be simultaneously accessible if they are not more than 2.5 m apart.

2 Placing out of arm's reach is intended only to prevent unintentional contact with live parts.

3 The term 'arm's reach' is defined in Clause 1.4.16 and illustrated in Figure 1.1.

Where a normally occupied position is restricted in the horizontal direction by an obstacle, e.g. handrail or mesh screen, affording a degree of protection less than IPXXB or IP2X, arm's reach shall extend from that obstacle.

In the vertical direction, arm's reach shall extend from the surface not taking into account any intermediate obstacle providing a degree of protection less than IPXXB or IP2X.

In places where bulky or long conductive objects are normally handled, the distances required by this Clause shall be increased to accommodate the relevant dimensions of those objects.

1.5.5 Fault protection

1.5.5.1 *General*

Protection shall be provided against dangers that may arise from contact with exposed conductive parts that may become live under fault conditions.

In each part of an electrical installation, one or more methods of protection shall be applied, taking account of the conditions of external influence.

The methods of protection applied in the installation shall be considered in the selection and erection of equipment.

1.5.5.2 *Methods of protection*

Fault protection shall be provided by one or any combination of the following methods:

(a) Automatically disconnect the supply on the occurrence of a fault likely to cause a current flow through a body in contact with exposed

COPYRIGHT

Copyright Standards New Zealand

auto login of Electrical Workers Licensing Group is licenced to temporarily download this document.
Electrical Workers Licensing Group may print this document but not more than 10% of the documents subscribed to may be held in printed form at any one time.

conductive parts, where the value of that current is equal to or greater than the shock current, in accordance with Clause 1.5.5.3.

(b) Prevent a fault current from passing through a body by the use of Class II equipment or equivalent insulation, in accordance with Clause 1.5.5.4.

(c) Prevent a fault current from passing through a body by electrical separation of the system, in accordance with Clause 1.5.5.5.

NOTE: Clause 7.4 provides further guidance on electrical separation.

(d) Limit the fault current that can pass through a body to a value lower than the shock current.

NOTE: The most commonly used method of protection is automatic disconnection of supply.

1.5.5.3 *Protection by automatic disconnection of supply*

The following applies:

(a) Automatic disconnection of supply is intended to limit the prospective touch voltage arising between simultaneously accessible conductive parts in the event of a fault between a live part and exposed conductive parts or a protective earthing conductor.

This method of protection shall be achieved by—

(i) provision of a system of equipotential bonding in which exposed conductive parts are connected to a protective earthing conductor; and

(ii) disconnection of the fault by a protective device.

NOTES:

1 Automatic disconnection of supply may also be required for protection against overcurrents, in accordance with Clause 1.5.9 and Clause 2.5.

2 Clause 5.6 contains requirements for equipotential bonding.

3 Section 2 contains requirements for the disconnection of a fault by a protective device.

(b) *Touch-voltage limits* In the event of a fault between a live part and an exposed conductive part that could give rise to a prospective touch voltage exceeding 50 V a.c. or 120 V ripple-free d.c., a protective device shall automatically disconnect the supply to the circuit or electrical equipment concerned.

NOTE: Lower touch-voltage limits are required for special electrical installations or locations by the relevant clauses of Sections 6 and 7.

(c) *Earthing system impedance (earth fault-loop impedance)* The characteristics of protective devices and the earthing system impedance shall be such that, if a fault of negligible impedance occurs anywhere in the electrical installation between an active conductor and

COPYRIGHT

Copyright Standards New Zealand

auto login of Electrical Workers Licensing Group is licenced to temporarily download this document.
Electrical Workers Licensing Group may print this document but not more than 10% of the documents subscribed to may be held in printed form at any one time.

a protective earthing conductor or exposed conductive part, automatic disconnection of the supply will occur within the specified time.

NOTES:

1 Clause 5.7 contains further requirements and Appendix B provides guidance regarding earth fault-loop impedance.

2 Refer to Appendix B, Table B1, for comparison of circuit route length based on impedance and various voltage drops.

(d) *Disconnection times* The maximum disconnection time for 230/400 V supply voltage shall not exceed the following:

(i) 0.4 s for final subcircuits that supply—

(A) socket-outlets having rated currents not exceeding 63 A;

(B) hand-held Class I equipment; or

(C) portable equipment intended for manual movement during use.

(ii) 5 s for other circuits including submains and final subcircuits supplying fixed or stationary equipment.

NOTE: Maximum disconnection times will vary for other voltages and installation conditions. Appendix B provides further guidance regarding disconnection times.

(e) *Supplementary equipotential bonding* Bonding of extraneous conductive parts and their connection to the earthing system may be used to reduce the earth fault-loop impedance, in order to ensure that the disconnection time of the protective device is sufficient to satisfy the requirements of Items (b) to (d) above.

NOTE: This provision does not preclude other measures, such as selection of an alternative protective device that has a lower automatic operating current (I_a) within the required disconnection time, e.g. an RCD.

1.5.5.4 *Protection by the use of Class II equipment or by equivalent insulation*

The following applies:

(a) Protection against the occurrence of dangerous voltages on accessible conductive parts of electrical equipment in the event of a fault in the basic insulation may be achieved by one of the following means:

(i) Equipment having double or reinforced insulation (Class II equipment).

(ii) Switchgear assemblies having total insulation in accordance with either AS/NZS 3439.1 or AS/NZS 61439.1.

(iii) Equipment having basic insulation with appropriate supplementary insulation applied during installation.

COPYRIGHT

Copyright Standards New Zealand

auto login of Electrical Workers Licensing Group is licenced to temporarily download this document.
Electrical Workers Licensing Group may print this document but not more than 10% of the documents subscribed to may be held in printed form at any one time.

(iv) Equipment having uninsulated live parts with appropriate reinforced insulation applied during installation.

Where the means of Item (iii) or (iv) is used, the additional insulation and the intended use of the electrical equipment shall provide a degree of safety equivalent to Items (i) or (ii).

NOTES:

1 Coatings, such as paint, varnish, enamel, or similar products, are not considered appropriate insulating covering for the purpose of this Clause.

2 In accordance with Clause 1.5.14, where damage to double insulation may be reasonably expected, precautions should be taken to ensure protection. Such precautions may include earthing the enclosure or RCD protection.

(b) *Constructional requirements* Where protection is dependent on a separate covering or enclosure providing supplementary insulation the following shall apply:

(i) Any insulating covering shall not contain any screws or bolts made of insulating material if there is a risk of impairment of the insulation by the replacement of such screws or bolts with metal screws or bolts.

(ii) Where lids or doors in any insulating enclosure can be opened without the use of a tool or key, conductive parts shall be located behind an insulating barrier that provides a degree of protection not less than IPXXB or IP2X and which shall be removable only by use of a tool.

1.5.5.5 *Protection by electrical separation*

Separation is intended, in an individual circuit, to prevent shock current through contact with exposed conductive parts that might be energized by a fault in the basic insulation of that circuit.

Live parts of a separated circuit shall not be connected at any point to earth or to another circuit.

Any protective bonding conductor associated with a separated circuit shall not be connected at any point to earth.

NOTE: Clause 7.4 contains requirements for protection by electrical separation.

1.5.6 Additional protection by the use of RCDs

1.5.6.1 *Basic protection*

RCDs are not recognized as a sole means of basic protection (in normal service) but may be used to augment one of the means set out in Clause 1.5.4.2.

1.5.6.2 *Fault protection*

RCDs are recognized as a means of providing automatic disconnection of supply in accordance with Clause 1.5.5.3.

COPYRIGHT

Copyright Standards New Zealand

Electrical Workers Licensing Group is licenced to temporarily download this document.
auto login of Electrical Workers Licensing Group may print this document but not more than 10% of the documents subscribed to may be held in printed form at any one time.

auto login of Electrical Workers Licensing Group is licenced to temporarily download this document.
Electrical Workers Licensing Group may print this document but not more than 10% of the documents subscribed to may be held in printed form at any one time.

1.5.6.3 *Where required*

RCDs for the limitation of earth leakage current shall be capable of interrupting the part of the circuit protected by the RCD when an earth leakage current reaches a predetermined value.

RCDs shall be installed for additional protection of the following:

(a) Circuits, socket-outlets, lighting points and hand-held equipment, as specified in Part 2, Clause 2.6.

(b) Wiring systems, as specified in Part 2, Clause 3.9.4.4.

(c) Electric heating cables, as specified in Part 2, Clause 4.10.5.

(d) Electrical equipment, including socket-outlets, installed in damp situations, as specified in Part 2, Section 6.

(e) Specific electrical installations, as specified in AS/NZS 3001, AS/NZS 3002, AS/NZS 3003, AS/NZS 3004, AS/NZS 3012 and AS/NZS 4249.

NOTE: In areas where excessive earth leakage current could present a significant risk in the event of failure of other measures of protection or carelessness by users, RCDs are designed to provide additional protection against the effects of electric shock by automatically disconnecting supply before serious physical injury can occur.

1.5.7 Basic and fault protection by use of extra-low voltage

Separated extra-low voltage (SELV) or protected extra-low voltage (PELV) systems may be used to provide both basic and fault protection subject to the following conditions:

(a) The nominal voltage shall not be capable of exceeding the limits for extra-low voltage (50 V a.c. or 120 V ripple-free d.c.) and the source of supply is arranged so that it cannot exceed these values.

(b) Circuits shall be electrically segregated from each other and from circuits at higher voltages.

(c) Live parts of SELV circuits shall not be connected to earth or to protective earthing conductors that are part of other circuits or to other live parts.

(d) Live parts of PELV circuits shall be protected from direct contact by barriers or insulation unless the voltage does not exceed 25 V a.c. or 60 V ripple-free d.c. in dry areas where a large contact area with the human body is not expected or 6 V a.c. or 15 V ripple-free d.c. in all other areas.

NOTE: Clause 7.5 provides specific deemed to comply requirements for the arrangement of ELV circuits.

1.5.8 Protection against thermal effects in normal service

Electrical installations shall be arranged so that there is no risk of ignition of flammable materials because of high temperature or

COPYRIGHT

electric arc in normal service. During normal operation of the electrical equipment there shall be no risk of persons or livestock suffering burns.

The selection and installation of electrical equipment shall be such that the temperature characteristics of the electrical equipment, properly installed and operated, do not adversely affect the electrical equipment, the electrical installation itself or any other installation, whether electrical or otherwise.

Adequate ventilation shall be provided where heat is generated in normal operation in order to maintain operating temperatures below the rated or specified limits.

NOTES:

1 Account should be taken of the influence that temperature might have on the operational or characteristic values of the electrical equipment.

2 Further information on thermal effects associated with the installation of electrical equipment is given in Clause 4.2.

1.5.9 Protection against overcurrent

Protection shall be provided against injury or property damage because of excessive temperatures or electromechanical stresses caused by any overcurrents likely to arise in live conductors.

Protection may be provided by one of the following methods:

(a) Automatic disconnection on the occurrence of an overcurrent, before this overcurrent attains a dangerous value, taking into account its duration.

(b) Limiting the maximum overcurrent to a safe value and duration.

1.5.10 Protection against earth fault currents

Protective earthing conductors and any other parts intended to carry an earth fault current shall be capable of carrying that current without attaining excessive temperature.

1.5.11 Protection against abnormal voltages

1.5.11.1 *General*

Protection shall be provided against any harmful effects of abnormal voltages—

(a) caused by a fault between live parts of circuits supplied at different voltages;

(b) induced or otherwise occurring in unused conductors; or

(c) occurring as a result of any harmful influence between different circuits and installations.

auto login of Electrical Workers Licensing Group is licenced to temporarily download this document.
Electrical Workers Licensing Group may print this document but not more than 10% of the documents subscribed to may be held in printed form at any one time.

Copyright Standards New Zealand

auto login of Electrical Workers Licensing Group is licenced to temporarily download this document.
Electrical Workers Licensing Group may print this document but not more than 10% of the documents subscribed to may be held in printed form at any one time.

1.5.11.2 *Circuits operating at different voltages*

Protection shall be provided against injury or property damage because of any harmful effects of a fault between live parts of circuits supplied at different voltages.

Protection may be provided by—

(a) segregation; or

NOTE: Clause 3.9.8.1 provides guidance on the segregation of circuits of different voltage levels.

(b) installation of devices for protection against overvoltages.

NOTE: Clause 2.7 provides guidance on the installation of devices for protection against overvoltages.

1.5.11.3 *Voltage disturbances and electromagnetic influences*

Protection against damage as a consequence of overvoltage, such as that originating from lightning or from switching operations, is not a requirement of this Standard.

NOTE: Clause 2.7 and Appendix F provide guidance on overvoltage (surge) protection.

1.5.11.4 *Voltage in unused conductors*

Protection shall be provided against injury or property damage because of any harmful effects of voltage that may be induced or otherwise occur in unused conductors. Disconnected, redundant or unused conductors associated with conductors that remain connected shall be terminated and protected at both ends in the same manner as is required for live conductors.

NOTE: Such conductors are capable of attaining induced, unwanted voltages that may be dangerous, particularly where in close proximity to high voltage conductors.

1.5.11.5 *Different circuits and installations*

Protection shall be provided against injury or property damage because of any harmful influence between—

(a) different electrical installations;

(b) different circuits of the same electrical installation;

(c) electrical and non-electrical installations; and

(d) the electrical installation and the structure in or on which it is installed.

NOTES:

1 Requirements for the enclosure of telecommunication cables with other wiring systems, including high voltage systems, are contained in AS/CA S009 and for New Zealand, in the NZ Telecommunications Forum (TCF) Premises Wiring Guidelines.

2 AS/NZS 3080 provides guidance on the effects of electrical interference to circuits, such as telecommunications and data transfer.

Copyright Standards New Zealand

1.5.12 Protection against the spread of fire

Protection shall be provided against fire initiated or propagated by components of the electrical installation.

Electrical equipment shall be selected, installed and protected such that the equipment will not—

(a) obstruct escape routes, either directly or by the products of combustion;

(b) contribute to or propagate a fire;

(c) attain a temperature high enough to ignite adjacent material; or

(d) adversely affect means of egress from a structure.

NOTES:

1 Clause 2.10.2.5(h) contains requirements for the placement of switchboards in or near fire exits and egress paths.

2 Clauses 2.10.7, 3.9.9 contain requirements and Appendix E provides guidance on fire safety.

1.5.13 Protection against injury from mechanical movement

Protection shall be provided against injury from mechanical movement of electrically actuated equipment, where—

(a) mechanical maintenance may involve risk of physical injury; or

(b) emergency stopping may be necessary to remove any unexpected danger.

Protection may be provided by the provision of devices to disconnect or isolate electrical equipment, as may be necessary to prevent or remove danger.

1.5.14 Protection against external influences

All parts of an electrical installation shall be designed to be adequately protected against damage that might reasonably be expected from environmental and other external influences to which the electrical installation may be exposed under the conditions of its use. These conditions would be those that would be expected during normal operation.

Damage from such influences may include mechanical damage, and damage because of exposure to weather, water, flora, fauna, seismic activity, excessive dampness, corrosive fumes, galvanic action, accumulation of dust, steam, oil, temperature, explosive atmospheres, vibration or any other influence to which the electrical installation may be exposed under the conditions of its use.

auto login of Electrical Workers Licensing Group is licenced to temporarily download this document.
Electrical Workers Licensing Group may print this document but not more than 10% of the documents subscribed to may be held in printed form at any one time.

Copyright Standards New Zealand

1.6 DESIGN OF AN ELECTRICAL INSTALLATION

1.6.1 General

An electrical installation shall be designed to—

(a) protect persons, livestock and property from harmful effects;

(b) function correctly as intended;

(c) connect, operate safely and be compatible with the electricity distribution system, or other source of supply, to which the electrical installation is to be connected;

(d) facilitate safe operation, inspection, testing and maintenance; and

* **(e) reduce inconvenience in the event of a fault.**

NOTE: Consideration should be given to the provisions of Appendix M concerning the disruption of supply.

1.6.2 Supply characteristics

The following characteristics of the electricity supply shall be determined:

(a) Nature of current, a.c. or d.c.

(b) Nature and number of conductors, as follows:

(i) Active (phase), neutral and protective earthing conductors for a.c.

(ii) Equivalent conductors for d.c.

(c) Voltage and voltage tolerances.

NOTE: The nominal voltage and tolerances for low voltage supply systems and electrical installations are—

(a) for Australia, 230/400 V + 10% to −6% (in accordance with AS 60038); and **A**

(b) for New Zealand, 230/400 V + 6% to −6% (in accordance with IEC 60038). **NZ**

(d) Frequency and frequency tolerances.

(e) Maximum current that can be supplied.

(f) Prospective short-circuit current.

NOTE: Information regarding prospective short-circuit and fault currents at the point of supply may be obtained from the local electricity distributor.

(g) Protective measures inherent in the supply, e.g. MEN earthing system.

(h) Limits on the use of equipment.

(i) Harmonic current or other limitations.

1.6.3 Maximum demand

The maximum demand of an electrical installation shall be determined, taking account of the capacity, physical distribution and intended use of electrical equipment in the electrical installation and the manner in which the present requirements might vary.

COPYRIGHT

auto login of Electrical Workers Licensing Group is licenced to temporarily download this document.
Electrical Workers Licensing Group may print this document but not more than 10% of the documents subscribed to may be held in printed form at any one time.

Copyright Standards New Zealand

Consumer mains, submains and other electrical equipment of an electrical installation shall be designed and installed to meet the maximum demand.

NOTE: Clause 2.2.2 contains acceptable methods of determining maximum demand.

1.6.4 Utilization voltage

The electrical installation shall be designed and installed to ensure that the voltage at the terminals of electrical appliances and equipment is suitable for the nominal operating voltage of electrical appliances and equipment to be supplied.

NOTE: Clause 3.6 contains requirements relating to voltage drop.

1.6.5 Electrical installation circuit arrangement

Every electrical installation shall be divided into circuits as necessary to—

(a) avoid danger and minimize inconvenience in the event of a fault; and

(b) facilitate safe operation, inspection, testing and maintenance.

NOTE: Clause 2.3 contains requirements for the control and protection of electrical installations.

1.7 SELECTION AND INSTALLATION OF ELECTRICAL EQUIPMENT

1.7.1 General

Electrical equipment forming part of an electrical installation shall be—

(a) selected and installed to operate in a safe and reliable manner in the course of normal operating conditions;

(b) selected and installed so as not to cause a danger from electric shock, fire, high temperature or physical injury in the event of reasonably expected conditions of abnormal operation, overload, fault or external influences that may apply in the electrical installation; and

(c) electrical equipment shall be installed in accordance with the requirements of this Standard and the additional requirements as specified in the manufacturer's instructions.

1.7.2 Installation work practice

In order to address the requirement of Clause 1.7.1, electrical equipment shall be installed in accordance with safe and sound work practices, including the following:

(a) Appropriate construction and operating characteristics of the equipment to protect against the mechanical, environmental or other external influences, including condensation, to which it is likely to be

COPYRIGHT

Copyright Standards New Zealand

auto login of Electrical Workers Licensing Group is licenced to temporarily download this document.
Electrical Workers Licensing Group may print this document but not more than 10% of the documents subscribed to may be held in printed form at any one time.

exposed at the intended point of installation. The means of protection, which shall not be impaired in the process of installation, may be integral to the equipment or an additional enclosure provided as part of the electrical installation.

(b) Installation instructions provided by the equipment supplier.

(c) Adequate and safe access or working space is provided to equipment requiring operation or maintenance.

(d) Adequate strength and durability of fixings, fastenings and supports.

(e) Particular needs of the user/operator.

* (f) Installation wiring conductors shall be clearly identified to indicate their intended function as active, neutral, main earthing, protective earthing (PE) or equipotential bonding (EPB) conductors.

Conductors with a green or green/yellow (G/Y) combination core insulation colour or sleeving colour are strictly reserved for identifying the main earthing conductor, protective earthing (PE) conductor, or the equipotential bonding (EPB) conductor.

Live conductors shall not be insulated or sheathed with green, yellow or green/yellow combination colours in installation wiring.

Exception: In New Zealand only, there is no restriction on sheath colour. NZ

(g) The polarization of socket-outlets shall be in accordance with the product specification and shall be consistent throughout the installation.

(h) Semi-enclosed rewireable fuses shall not be installed.

* (i) Condensation issues—a breathing/pressure equalization valve shall be installed to assist with changes in humidity and drainage of moisture.

* (j) Electrical equipment shall be installed to manufacturer's instructions to ensure that the marked IP rating is maintained.

1.7.3 Equipment selection

Electrical equipment shall be selected to comply with the requirement of Clause 1.7.1. Equipment is deemed to satisfy that requirement if it satisfies one or more of the following conditions:

(a) The safety requirements for low voltage electrical equipment specified in AS/NZS 3820.

(b) The safe design, construction, installation and performance provisions of—

(i) an Australian, New Zealand or Australian/New Zealand Standard that is appropriate and relevant to the type of electrical equipment; or

COPYRIGHT

auto login of Electrical Workers Licensing Group is licenced to temporarily download this document.
Electrical Workers Licensing Group may print this document but not more than 10% of the documents subscribed to may be held in printed form at any one time.

Copyright Standards New Zealand

(ii) where an Australian/New Zealand Standard appropriate and relevant to the type of electrical equipment does not exist, a recognized international or national Standard of another country that is appropriate and relevant to the type of electrical equipment and to the electrical installation conditions in Australia and New Zealand may be applied.

NOTES:

1 Appendix A is a numerical listing of Standards referred to within this Standard.

2 Equipment that bears the Regulatory Compliance Mark satisfies the relevant regulatory requirements for electrical safety and can be presumed to comply with the requirements of Clause 1.7.1. The conditions for the use of the mark, including references to specific Standards for which it applies, are set out in AS/NZS 4417.

3 Regulatory authorities may also accept other marks or means of determining that equipment satisfies the relevant regulatory requirements for electrical safety.

1.7.4 Damp situations

Electrical equipment used in damp situations shall be selected and installed to—

(a) operate safely near or within a damp or wet environment;

(b) provide additional protection against electric shock in locations where the presence of water or high humidity presents an increased risk; and

(c) provide adequate protection against damage that might reasonably be expected from the presence of water or high humidity.

1.8 VERIFICATION (INSPECTION AND TESTING)

All electrical installations and any alterations and repairs to electrical installations shall, prior to being placed in service or use, be inspected as far as practicable and tested to verify that the installation meets the requirements of this Standard.

Precautions shall be taken to avoid danger to persons and to avoid damage to property and installed equipment during inspection and testing.

Where the installation is an extension or alteration of an existing installation, it shall be verified that the extension or alteration complies with this Standard and does not impair the safety of the existing installation.

The correct connection of conductors to protective switching and control devices shall form a part of this verification.

NOTES:

1 Section 8 sets out requirements for the verification and testing of electrical installations.

* 2 Appendix K provides a switchboard requirement summary with guidance on inspection and verification of switchboards.

COPYRIGHT

auto login of Electrical Workers Licensing Group is licenced to temporarily download this document.
Electrical Workers Licensing Group may print this document but not more than 10% of the documents subscribed to may be held in printed form at any one time.

Copyright Standards New Zealand

1.9 MEANS OF COMPLIANCE

1.9.1 Compliance with Part 2 of this Standard

In Australia only, electrical installations that meet all of the relevant requirements of Part 2 of this Standard are deemed to meet Part 1 of this Standard. **A**

1.9.2 Compliance with the requirements of other standards

* Refer to Clause 7.8 for standards applicable to specific electrical installations and Appendix A for a list of referenced Standards.

1.9.3 Alterations and repairs

1.9.3.1 *Alterations*

Alterations to electrical installations shall comply with all relevant provisions of this Standard.

* Alterations to electrical installations shall not cause any portion of the original electrical installation, or electrical equipment connected thereto, to—

(a) carry currents or sustain voltages in excess of those permitted by this Standard; or

(b) be used in any manner that is not in accordance with this Standard.

Alterations to an electrical installation constructed to a Part 1 design and installation solution shall not alter the compliance of that installation with Part 1 of this Standard.

NOTE: Appendix I provides guidance on the ratings of overload protective devices where alterations or repairs involve the use of existing imperial conductors.

1.9.3.2 *Repairs*

* Repairs to existing electrical installations or parts thereof may be effected using methods, fixtures and fittings that were acceptable when that part of the electrical installation was originally installed or with methods, fixtures and fittings currently available as direct replacement, provided that the methods satisfy the fundamental safety principles of Part 1 of this Standard.

NOTE: Appendix I provides guidance on the ratings of overload protective devices where alterations or repairs involve the use of existing imperial conductors.

1.9.4 Compliance by specific design and installation

1.9.4.1 *Use of a Part 1 design*

In Australia only, this Clause shall not apply to domestic electrical installations. **A**

Electrical installations or portions of non-domestic electrical installations that do not meet Part 2 of this Standard, may use a specific design and installation method as detailed below.

COPYRIGHT

Copyright Standards New Zealand

auto login of Electrical Workers Licensing Group is licenced to temporarily download this document.
Electrical Workers Licensing Group may print this document but not more than 10% of the documents subscribed to may be held in printed form at any one time.

Such installations may be deemed suitable provided that, having due regard to all the circumstances associated with the intended application, they—

(a) satisfy the fundamental principles of Part 1 of this Standard;

(b) will result in a degree of safety from physical injury, fire and electric shock not less than that which, in other circumstances, would be achieved by compliance with the particular requirements of this Standard; and

(c) satisfy the other requirements of this Standard as detailed in this Clause.

The remaining portions of such installations shall comply with Part 2 of this Standard.

If all or part of the design/construction of the electrical installation is not based on the deemed to comply methods in Part 2 of this Standard, this choice shall be made prior to final certification of the construction.

NOTE: Certain jurisdictions may require approval of proposed deviation.

1.9.4.2 *Acknowledgment by the owner or operator of the electrical installation and retainment of design documentation*

Any departures from Part 2 of this Standard shall be formally acknowledged.

* A copy of the design documentation (see Clause 1.9.4.3) shall be retained on site.

1.9.4.3 *Documentation (by the designer)*

The Part 1 design shall be documented. Such documentation shall be in the English language and detail—

(a) why Part 2 of this Standard was not adopted;

(b) the verification requirements that are required to be undertaken to ensure full compliance with this Standard;

(c) how compliance with Part 1 of this Standard is being achieved;

(d) the owner or operator's acknowledgment as to any departure from Part 2 of this Standard;

(e) any requirements where the design requires specific installation use by the owner or operator of the electrical installation, with a copy of these requirements provided to the owner or operator; and

(f) the verification undertaken to ensure full compliance with this Standard, and the results of this verification.

The designer shall keep all documentation for a period of not less than the statutory requirements.

Electrical Workers Licensing Group may print this document but not more than 10% of the documents subscribed to may be held in printed form at any one time.
auto login of Electrical Workers Licensing Group is licenced to temporarily download this document.

Copyright Standards New Zealand

All Part 1 design documentation should be provided to the owner/occupier of installation.

1.9.4.4 *Verification*

All parts of an electrical installation that do not comply with Part 2 of this Standard shall be verified as complying with the specific design and with Part 1 of this Standard prior to being placed in service.

1.9.4.5 *Competency requirements of designers*

Persons undertaking designs that depart from Part 2 of this Standard shall be competent.

1.9.4.6 *Identification*

* On the adoption of a Part 1 solution in relation to an electrical installation, the main switchboard of the installation where the Part 1 solution has been adopted, and any other switchboard that is associated with the Part 1 solution, shall be clearly and permanently marked with the intent of the following words:

Example of the wording:

WARNING: PART OR PARTS OF THIS INSTALLATION ADOPT A PART 1 SOLUTION UNDER AS/NZS 3000 AS SHOWN IN THE DOCUMENTATION.

Copyright Standards New Zealand

auto login of Electrical Workers Licensing Group is licenced to temporarily download this document.
Electrical Workers Licensing Group may print this document but not more than 10% of the documents subscribed to may be held in printed form at any one time.

STANDARDS AUSTRALIA/STANDARDS NEW ZEALAND

Australian/New Zealand Standard

Electrical installations (known as the Australian/New Zealand Wiring Rules)

Part 2: Installation practices—Sections 2 to 8

Copyright Standards New Zealand

auto login of Electrical Workers Licensing Group is licenced to temporarily download this document.
Electrical Workers Licensing Group may print this document but not more than 10% of the documents subscribed to may be held in printed form at any one time.

SECTION 2 GENERAL ARRANGEMENT, CONTROL AND PROTECTION

2.1 GENERAL

2.1.1 Application

This Section specifies the minimum requirements for the selection and installation of switchgear and controlgear that shall be achieved to satisfy Part 1 of this Standard.

2.1.2 Selection and installation

Switchgear and controlgear shall be selected and installed to perform the following functions or have the following features:

A1 **(a) Provide control or isolation of the electrical installation, circuits or individual items of apparatus as required for maintenance, testing, fault detection or repair.**

(b) Enable automatic disconnection of supply in the event of an overload, short-circuit or excess earth leakage current in the protected part of the electrical installation.

(c) Provide protection of the electrical installation against failure from overvoltage or undervoltage conditions.

(d) Provide for switchgear and controlgear to be grouped and interconnected on switchboards, enclosed against external influences, and located in accessible positions.

(e) Separately control and protect the circuit arrangements without affecting the reliability of supply to, or failure of, other parts of the installation.

* **(f) Installed in accordance with the requirements of this Section, and the additional requirements as specified in the manufacturer's instructions.**

The operating characteristics of switchgear, controlgear and switchboards that shall be considered include voltage rating, current rating, frequency, temperature rise, duty, and fault level.

2.2 ARRANGEMENT OF ELECTRICAL INSTALLATION

2.2.1 Circuits

2.2.1.1 *General*

The electrical installation shall be arranged into an appropriate number of separate circuits taking the following into account:

(a) The relationship of the equipment, including any requirement for operation as a group and any special need identified by the user.

COPYRIGHT

Copyright Standards New Zealand

auto login of Electrical Workers Licensing Group is licenced to temporarily download this document.
Electrical Workers Licensing Group may print this document but not more than 10% of the documents subscribed to may be held in printed form at any one time.

(b) The load and operating characteristics of the equipment in relation to the rating of the circuit components.

(c) The limitation of consequences of circuit failure including loss of supply to critical equipment, overload and the ability to locate a fault.

(d) The facility for maintenance work, and capacity for alterations and additions, to be performed without interrupting supply to other parts of the installation.

* NOTE: Specific design and equipment may need to be considered to ensure the continuity of supply. For further guidance, refer to Appendix M.

Circuits for safety services shall be separate from those used to supply the remainder of the electrical installation, as required by Clause 7.2.2.

NOTES:

1 The most common distribution arrangement for a low voltage electrical installation is radial branched distribution, an example of which is shown in Figure B1 (Appendix B).

2 Division of circuits falls logically into several categories, each an individual circuit or group of circuits. Typically, the circuit groups selected are as follows:

(a) Lighting.
(b) Socket-outlets.
(c) Heating and/or airconditioning appliances.
(d) Motor-driven plant.
(e) Auxiliary services, such as indication and control.
(f) Safety services.

3 Appendix C provides guidance on circuit arrangements for basic applications.

2.2.1.2 *Origin of submains and final subcircuits*

A1 All live conductors of every submain and every final subcircuit shall commence at a main switchboard or at a distribution switchboard.

All live conductors of a submain or a final subcircuit shall be connected at the one switchboard.

2.2.1.3 *Common neutral*

Each single-phase circuit, and each multiphase circuit that requires a neutral conductor for the operation of connected equipment, shall incorporate a neutral conductor.

A common neutral conductor may be used for two or more circuits originating from the same supply subject to the following conditions:

(a) The continuity of the common neutral conductor shall not depend on connections at the terminals of electrical equipment, including control switches.

COPYRIGHT

auto login of Electrical Workers Licensing Group is licenced to temporarily download this document.
Electrical Workers Licensing Group may print this document but not more than 10% of the documents subscribed to may be held in printed form at any one time.

Copyright Standards New Zealand

(b) Final subcircuits that contain a common neutral shall be controlled and protected by linked circuit-breakers or linked switches.

(c) The neutral conductor shall be marked at switchboards to identify the associated active conductors in accordance with Clause 2.10.5.5.

(d) Alternative sources of supply to a single appliance (such as a water heater, space heater or airconditioner) shall have a common isolating switch.

NOTES:

1 Typical applications for common neutrals include groups of single-phase lights arranged across multiphase supply, and separate components of a single-phase appliance, such as a cooking unit.

2 Looping of a common neutral conductor at terminals of equipment supplied from different circuits may cause the load side neutral conductor potential to rise to full line voltage and create a dangerous live situation when disconnected for repair or replacement of the equipment.

3 This Clause does not preclude connection of a common neutral in a junction box.

The current-carrying capacity of a common neutral shall be determined from the current-carrying capacity of the associated active conductors in accordance with Clause 3.5.2.

2.2.1.4 *Electric vehicle charging circuits*

* NOTES:

1 Guidance for installations for electric vehicle charging circuits is provided in Appendix P.

2 In New Zealand only, requirements for circuits supplying electric vehicle charging are in Clause 7.9. NZ

2.2.2 Maximum demand

The maximum demand in consumer mains, submains and final subcircuits, taking account of the physical distribution and intended usage of electrical equipment in the electrical installation and the manner in which the present requirements might vary, shall be determined using one of the methods set out in Items (a) to (d).

If the actual measured maximum demand is found to exceed that obtained by calculation or assessment, the measured value shall be deemed to be the maximum demand.

(a) *Calculation* The maximum demand may be calculated in accordance with the guidance given in this Standard for the appropriate type of electrical installation and electrical equipment supplied.

NOTE: Guidance on the determination of maximum demand is provided for basic electrical installations in Appendix C.

It is recognized that there may be considerable differences in loading from one electrical installation to another. Alternative methods of calculating the maximum demand may be used taking account of all

COPYRIGHT

Copyright Standards New Zealand

auto login of Electrical Workers Licensing Group is licenced to temporarily download this document.
Electrical Workers Licensing Group may print this document but not more than 10% of the documents subscribed to may be held in printed form at any one time.

the relevant information available for any particular electrical installation.

(b) *Assessment* The maximum demand may be assessed where—

A1

(i) the electrical equipment operates under conditions of fluctuating or intermittent loading, or a definite duty cycle; or

(ii) the electrical installation is large and complex; or

(iii) special types of occupancy exist.

(c) *Measurement* The maximum demand may be determined by the highest rate of consumption of electricity recorded or sustained over a period of 30 minutes when demand is at its highest by a maximum demand indicator or recorder.

(d) *Limitation* The maximum demand may be determined by the current rating of a fixed setting circuit-breaker, or by the load setting of an adjustable circuit-breaker.

The maximum demand of consumer mains and submains may be determined by the sum of the current settings of the circuit-breakers protecting the associated final subcircuit/s and any further submain/s.

2.2.3 Selection and installation of conductors

Conductors shall be selected and installed in accordance with the provisions of Section 3.

2.2.4 Operating characteristics of equipment

2.2.4.1 *General*

Every item of electrical equipment shall be selected and installed so as to ensure compliance with the following clauses and the relevant clauses in other sections of this Standard.

A device with more than one function shall comply with all the requirements of this Section appropriate to each separate function.

2.2.4.2 *Voltage*

The voltage rating of electrical equipment shall be suitable for the nominal voltage of the circuit to which it is connected.

2.2.4.3 *Current*

Each item of electrical equipment shall be selected and installed to be suitable for—

(a) the design current, taking into account any capacitive, inductive and harmonic effects; and

(b) the current likely to flow in abnormal conditions for such periods of time as are determined by the characteristics of the protective devices concerned.

auto login of Electrical Workers Licensing Group is licenced to temporarily download this document.
Electrical Workers Licensing Group may print this document but not more than 10% of the documents subscribed to may be held in printed form at any one time.

Copyright Standards New Zealand

2.2.4.4 *Frequency*

If frequency has an influence on the characteristics of electrical equipment, the rated frequency of electrical equipment shall correspond to the nominal frequency of the supply to the circuit concerned.

2.2.4.5 *Power*

Each item of electrical equipment selected on the basis of its power characteristics shall be suitable for the duty demanded of the electrical equipment.

2.2.4.6 *Effects on operator or other equipment*

Each item of electrical equipment shall be selected and installed so that, providing it is maintained, it will not cause harm to an operator or harmful effects to other equipment, or impair the supply during normal service, including switching operations.

NOTE: This provision may restrict the use of electrical equipment that relies on the training of the operator for the safe and correct use of the electrical equipment.

2.3 CONTROL OF ELECTRICAL INSTALLATION

2.3.1 General

Electrical installations shall be provided with devices to prevent or remove hazards associated with the electrical installation and for maintenance of electrically activated equipment.

NOTE: The measures specified in this Clause (Clause 2.3) are in addition to, and not alternatives to, the protective measures specified in Clause 2.4.

Electrical installations shall include all switching devices or other means of disconnection necessary to enable operations, repairs and maintenance work to be carried out safely.

Any device provided shall comply with the relevant requirements of this Clause (Clause 2.3), in accordance with the intended function or functions.

Such devices are classified according to one of the following functions:

(a) Isolation, in accordance with Clause 2.3.2.2.

(b) Emergency, in accordance with Clause 2.3.5.2.

(c) Mechanical maintenance, in accordance with Clause 2.3.6.2.

(d) Functional (control), in accordance with Clause 2.3.7.2.

Where two or more such functions are performed by a common device, that device shall comply with all the requirements for each of the functions concerned.

auto login of Electrical Workers Licensing Group is licenced to temporarily download this document.
Electrical Workers Licensing Group may print this document but not more than 10% of the documents subscribed to may be held in printed form at any one time.

Copyright Standards New Zealand

2.3.2 Common control requirements

2.3.2.1 *General*

* **2.3.2.1.1** *All systems*

Every circuit shall be capable of being isolated from each of the supply conductors, in accordance with Clause 2.3.2.1.2 or 2.3.2.1.3, as appropriate.

Provided that the service conditions allow it, and the appropriate safety measures are maintained, a group of circuits may be isolated by a common switch.

Provision shall be made to enable isolation of electrical equipment and to prevent electrical equipment from being inadvertently energized. The means of isolation shall be such that a deliberate action in addition to the normal method of operation is required to energize the circuit.

NOTE: Such precautions may include one or more of the following measures:

(a) Provision for the fitting of a padlock.

(b) Warning tags or notices.

(c) Location within a lockable space or enclosure.

(d) Short-circuiting and earthing may be used as a supplementary measure only.

Where an item of equipment or enclosure contains live parts connected to more than one supply, a notice shall be placed in such a position that any person gaining access to live parts will be warned of the need to isolate those parts from the various supplies.

Exception: A notice need not be provided where an interlocking arrangement is provided or the live parts are suitably shrouded to ensure that all the circuits concerned are isolated.

Where relevant, suitable means shall be provided for the discharge of stored electrical energy (see Clause 4.15.3).

* **2.3.2.1.2** *Alternating current systems*

Provisions for isolation of conductors in a.c. systems are as follows:

(a) *Active conductors* All active conductors of an a.c. circuit shall be capable of being isolated by a device for isolation.

(b) *Neutral conductor:*

(i) No switch or circuit-breaker shall be inserted in the neutral conductor—

(A) of consumer mains; or

(B) where the neutral conductor is used as a combined protective earthing and neutral (PEN) conductor for protective earthing of any portion of an electrical installation.

auto login of Electrical Workers Licensing Group is licenced to temporarily download this document.
Electrical Workers Licensing Group may print this document but not more than 10% of the documents subscribed to may be held in printed form at any one time.

Copyright Standards New Zealand

NOTE: This requirement applies to situations such as an earth sheath return (ESR) system or a submain neutral used for earthing of an electrical installation in an outbuilding in accordance with Clause 5.5.3.1.

A1

(ii) A switch or circuit-breaker may operate in the neutral conductor of circuits other than those in Item (i) where—

(A) the neutral pole of a multi-pole switch or circuit-breaker, having an appropriate short-circuit breaking and making capacity, is linked and arranged to switch substantially together with all active poles; or

(B) the switch or circuit-breaker is linked with corresponding switches so that the neutral contact cannot remain open when the active contacts are closed.

A switched neutral pole shall not open before and shall not close after the active pole(s).

(iii) Where an item of switchgear is required to disconnect all live conductors of a circuit, it shall be of a type such that the neutral conductor cannot be disconnected or reconnected without the respective active conductors also being disconnected or reconnected.

* NOTE: The manual disconnection and connection of neutral conductors should be as follows:

(a) The active conductors should be disconnected before the neutral conductors.

(b) The neutral conductors should be connected before the active conductors.

Refer to AS/NZS 4836 for safe work practices.

(iv) A switch in the control circuit of a fire pump shall operate in the neutral conductor in accordance with Clause 7.2.5.6.4.

In accordance with Clause 2.5.1.1, no fuse shall be inserted in a neutral conductor.

(c) *Switching of earthing conductor prohibited* An earthing conductor shall not be isolated or switched.

A conductor used as a combined protective earthing and neutral (PEN) conductor shall not be isolated or switched.

2.3.2.1.3 *Direct current systems*

* All conductors of a d.c. circuit shall be capable of being isolated by a device for isolation.

NOTE: Guidance is provided in Appendix Q on the installation of d.c. systems.

auto login of Electrical Workers Licensing Group is licenced to temporarily download this document.
Electrical Workers Licensing Group may print this document but not more than 10% of the documents subscribed to may be held in printed form at any one time.

Copyright Standards New Zealand

Exceptions:

1 *In the case of a d.c. circuit having one conductor connected either to earth or to a protective earthing conductor, that conductor need not be isolated or switched.*

2 *In accordance with Clause 7.5.8.2(b), switches in an extra-low voltage d.c. electrical installation may operate in one less conductor than the number of conductors in the circuit.*

2.3.2.2 *Devices for isolation*

2.3.2.2.1 *General*

* Devices for isolation shall effectively isolate all active conductors from the circuit.

A semiconductor (solid-state) device shall not be used for isolation purposes.

A device for isolation—

(a) shall be capable of withstanding an impulse voltage likely to occur at the point of installation, or shall have an appropriate contact gap; and

A1

(b) shall not be able to falsely indicate that the contacts are open; and

(c) shall clearly and reliably indicate the isolating position of the device; and

NOTE: The symbols 'O' (OFF) and 'I' (ON) are deemed to satisfy this requirement.

(d) shall be designed and installed so as to prevent unintentional closure, such as might be caused by impact, vibration or the like; and

A1

(e) shall be a device that disconnects all active conductors of the relevant supply; and

NOTE: Single-pole devices situated adjacent to one another may be used.

(f) shall be readily available.

Where a device for isolation is not capable of interrupting normal load current, suitable measures shall be taken to prevent it operating while carrying current.

NOTE: Such measures may include interlocking with an associated circuit-breaker or, where the device will only be operated by authorized persons, suitable warning notices.

Where a device for isolation is a switching device it shall be capable of being secured in the open position.

NOTE: Isolation may be achieved by means such as switch-disconnectors (switch isolators) or, where switching is not required, by—

(a) multi-pole or single-pole disconnectors (off load isolators);

(b) plugs and socket-outlets;

(c) fuses;

COPYRIGHT

Copyright Standards New Zealand

auto login of Electrical Workers Licensing Group is licenced to temporarily download this document.
Electrical Workers Licensing Group may print this document but not more than 10% of the documents subscribed to may be held in printed form at any one time.

(d) links; or

(e) special terminals that do not require the removal of a conductor.

2.3.2.2.2 *Identification*

All devices used for isolation shall be clearly identified to indicate the circuit or equipment that they isolate.

NOTE: This may be achieved by marking or, in the case of isolation of a single item of equipment, location of the device.

A switch that is marked with the following symbol, in accordance with the relevant Standard, is deemed to be suitable for isolation:

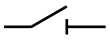

Relevant product Standards with requirements and tests for isolation include AS/NZS 3111, AS/NZS 3133, AS/NZS IEC 60947.2, AS/NZS IEC 60947.3, AS/NZS 60898.1, AS/NZS 61008.1 and AS/NZS 61009.1.

NOTE: Symbols used in this Standard are listed in Appendix J.

2.3.3 Main switches

* **2.3.3.1** *Introduction*

The following requirements are intended to provide for the—

(a) efficient and effective isolation of electricity supply from the electrical installation, or part thereof, by persons, including emergency services personnel, in the event of an emergency arising that requires prompt isolation; and

(b) maintenance of supply to safety services during an emergency that may require, or result in, isolation of supply from other portions of the electrical installation.

2.3.3.2 *General*

The supply to every electrical installation shall be controlled on the main switchboard by a main switch or switches that control the whole of the electrical installation.

Where multiple supplies are provided, each supply shall be controlled by a main switch or switches on the main switchboard for each supply.

* *Exception: Main switches for alternative or supplementary supplies may be located at any switchboard within the installation, provided they are installed in accordance with an applicable standard, for example, AS/NZS 3010 or AS/NZS 4777.1.*

Each part of an electrical installation supplying a safety service in accordance with Clause 7.2 shall be controlled by a main switch or switches, separate from those used to control the remainder of the electrical installation, as required by Clause 7.2.3.

COPYRIGHT

Copyright Standards New Zealand

auto login of Electrical Workers Licensing Group is licenced to temporarily download this document.
Electrical Workers Licensing Group may print this document but not more than 10% of the documents subscribed to may be held in printed form at any one time.

Every main switch shall satisfy the requirements of Clause 2.3.2.2 for isolating devices.

Main switches shall be located, arranged and legibly and permanently identified, in accordance with Clauses 2.3.3.3 to 2.3.3.5, to allow for their effective operation in an emergency.

Exceptions: The following need not be controlled by a main switch:

1 *Consumer mains.*

2 *Equipment installed as required by an electricity distributor for service protection, control or electricity consumption metering purposes.*

3 *Ancillary equipment, measuring devices and associated wiring that is required to be connected to the supply side of the main switch or switches, provided that this wiring and equipment is confined within or on the switchboard.*

4 *Equipment, such as voltage sensing equipment, associated with a safety service that is connected on the supply side of a main switch, in accordance with Clause 7.2.*

5 *Equipment, such as voltage sensing equipment, associated with an alternative supply system that is connected on the supply side of a main switch, in accordance with Clause 7.3.*

6 *Fault-current limiters.*

7 *Surge diverters installed to protect consumer mains or main switchboards.*

2.3.3.3 *Number of main switches*

The number of main switches shall be kept to the minimum practicable to provide for effective operation in an emergency.

Domestic electrical installations, including each separate domestic electrical installation forming part of a multiple electrical installation, shall be provided with not more than one main switch for—

(a) each separately metered supply; or

(b) where there is more than one separately controlled supply from a meter, a main switch for each of the separately controlled supplies.

* **2.3.3.4** *Location and operation*

Main switches shall be accessible as follows:

(a) *General* Main switches shall be readily accessible and the means of operating such switches shall be not more than two metres above the ground, floor or a suitable platform.

auto login of Electrical Workers Licensing Group is licenced to temporarily download this document.
Electrical Workers Licensing Group may print this document but not more than 10% of the documents subscribed to may be held in printed form at any one time.

Copyright Standards New Zealand

Exception: A main switch need not be located on a switchboard nor be readily accessible where unauthorized operation may impair safety and the electrical installation is—

(i) located on public land; and

(ii) associated with telephone cabinets, traffic control signals and street furniture, such as bus shelters, and the like; and

(iii) otherwise controlled and protected in accordance with the requirements of this Standard.

* (b) *Operating handles or controls* associated with a main switch shall be manually operated, single action and mechanical. They shall consist of a handle, lever, push-buttons or similar device. Electronic touch screens, programmable control systems or the like shall not be used as a means of operating main switches.

Electronic touch screens may be used for remote control of main switch/s as per Clause 2.3.3.6.

(c) *Electrical installations with more than one occupier* Each individual occupier shall have readily available access to an isolating switch or switches that isolate that occupier's portion of the electrical installation.

The isolating switch or switches need not control the submains supplying that portion of the electrical installation but shall be mounted on a switchboard located either in the individual portion of the electrical installation or within easy access from an entrance to the individual premises.

The number of such switches shall be in accordance with Clause 2.3.3.3 for main switches.

Exception: This requirement need not apply where the main switch or switches for the electrical installation are readily accessible to the individual occupier.

2.3.3.5 *Identification*

Main switches shall be identified as follows:

(a) Each main switch shall be marked 'MAIN SWITCH' and shall be readily distinguishable from other switchgear by means of grouping, contrasting colouring or other suitable means to provide for prompt operation in an emergency.

(b) Where there is more than one main switch, each main switch shall be marked to indicate the electrical installation or portion of the electrical installation it controls.

(c) Where the opening of a main switch brings into operation or isolates an alternative supply, a notice shall be provided to indicate the position of the main switch controlling the alternative supply.

COPYRIGHT

Copyright Standards New Zealand

auto login of Electrical Workers Licensing Group is licenced to temporarily download this document.
Electrical Workers Licensing Group may print this document but not more than 10% of the documents subscribed to may be held in printed form at any one time.

(d) Where supply is provided at more than one point in any building, a prominent notice shall be provided at each main switchboard, indicating the presence of other supplies and the location of other main switchboards.

* (e) Main switches for supplementary or alternative supplies shall be labelled to indicate the energy source.

NOTE: Marking requirements for other switches are contained in Clause 2.3.4.4.

2.3.3.6 *Remote control*

Where provision is made for remote control of the main switch or switches, the following applies:

(a) Remote control facilities shall be located and identified in accordance with Clauses 2.3.3.4, 2.3.3.5 and 2.10.2.4.

(b) Operation of remote control facilities shall cause the main switch to isolate supply to the associated parts of the installation.

(c) Where remote control facilities also provide the capability for a main switch to be closed—

A1 (i) the facilities shall be designed, arranged and installed to prevent inadvertent closing because of a fault or malfunction in the control circuit wiring or auxiliaries; and

(ii) the main switch shall have facility for a suitable device to enable it to be locked in the open position, in accordance with Clause 2.3.2.2; and

A1 (iii) the main switch shall not be capable of being overridden or bypassed by programmable control systems or the like.

Where provision is made for remote control of general installation main switches, remote control facilities need not be provided for separate main switches supplying safety services, in accordance with Clause 7.2.

* (d) Where an electronic touch screen, programmable control system or the like is used for the remote control of a main switch(es), the requirements for main switches in Clause 2.3.3.4(b) shall apply.

2.3.4 Additional isolating switches

2.3.4.1 *Electrical installation in an outbuilding*

An electrical installation in an outbuilding shall comply with the following:

(a) *General* An electrical installation in an outbuilding shall be treated as a separate electrical installation if it—

(i) has a maximum demand of 100 A or more per phase; and

(ii) is provided with a switchboard.

Copyright Standards New Zealand

auto login of Electrical Workers Licensing Group is licenced to temporarily download this document.
Electrical Workers Licensing Group may print this document but not more than 10% of the documents subscribed to may be held in printed form at any one time.

(b) *Main switches*:

(i) *General* A main or isolating switch or switches shall be installed on the switchboard in the outbuilding to control the electrical installation in the outbuilding.

(ii) *Supply by more than one submain* Where the electrical installation in the outbuilding is supplied through more than one submain, the supply through each such submain shall be controlled by a main switch or switches, in accordance with Item (b)(i).

The main switch or switches associated with each submain need not be mounted on the same switchboard as those associated with other submains, provided that the location of all other main switches within the outbuilding is indicated on a prominent and indelible notice adjacent to each main switch or group of switches.

2.3.4.2 *Submains and final subcircuits greater than 100 A*

Every submain and final subcircuit having a rating exceeding 100 A per phase shall be controlled by a separate isolating switch on the switchboard at which the circuit originates.

Exception: This requirement need not apply where fault-current limiters or fuses protect small submains that are teed off larger submains, e.g. teeing off large rising submains at each floor.

2.3.4.3 *Alternative supply*

Where an electrical installation, or part thereof, is provided with an alternative supply in accordance with Clause 7.3, an isolating switch shall be provided at the source of supply or at a switchboard, in accordance with Clause 7.3.

2.3.4.4 *Identification*

Isolating switches required by this Clause (Clause 2.3.4) shall be legibly and permanently identified, e.g. by marking, to indicate the circuits that they isolate.

Where, for functional reasons, a circuit for the control of an isolating device cannot be isolated in a distribution board or a switchgear assembly, a warning notice with suitable wording shall be affixed to that board or assembly.

Where the operation of a switch automatically brings into service an alternative supply, the purpose of the switch shall be marked accordingly.

2.3.4.5 *Appliances and accessories*

Appliances and accessories, including motors, shall be provided with devices for isolation and switching, in accordance with relevant clauses of Sections 4 and 7.

COPYRIGHT

auto login of Electrical Workers Licensing Group is licenced to temporarily download this document.
Electrical Workers Licensing Group may print this document but not more than 10% of the documents subscribed to may be held in printed form at any one time.

Copyright Standards New Zealand

These clauses include the following:

(a) Socket-outlets ..... Clause 4.4.

(b) Cooking appliances ..... Clause 4.7.

(c) Water heaters ..... Clause 4.8.

(d) Room heaters ..... Clause 4.9.

(e) Electric heating cables for floors and ceilings and trace heating appliances ..... Clause 4.10.

(f) Electricity converters ..... Clause 4.12.

(g) Motors ..... Clause 4.13.

(h) Capacitors ..... Clause 4.15.

* (i) Gas appliances and equipment ..... Clause 4.18.

(j) Airconditioners ..... Clause 4.19.

(k) Lifts ..... Clause 4.20.

(l) Safety services ..... Clause 7.2.

(m) Electricity generation systems ..... Clause 7.3.

2.3.5 Emergency switching including emergency stopping

2.3.5.1 *General*

Means shall be provided for emergency switching of any part of an electrical installation where it may be necessary to control the supply to remove an unexpected danger.

* Where required, because of the risk of electric shock, the emergency switching device shall be an isolating device.

The arrangement of the emergency switching shall be such that its operation does not introduce a further danger or interfere adversely with the complete operation necessary to remove the danger.

NOTES:

1 Emergency switching may require switching OFF or switching ON.

2 Examples of electrical installations where means for emergency switching are used are as follows:

(a) Machinery.

(b) Conveyors.

(c) Groups of machines.

(d) Pumping facilities for flammable liquids.

(e) Ventilation systems.

(f) Certain large buildings, e.g. department stores.

(g) Electrical testing and research facilities.

(h) Boiler rooms.

(i) Large kitchens.

COPYRIGHT

auto login of Electrical Workers Licensing Group is licenced to temporarily download this document.
Electrical Workers Licensing Group may print this document but not more than 10% of the documents subscribed to may be held in printed form at any one time.

Copyright Standards New Zealand

(j) Teaching laboratories.

(k) High-voltage discharge lighting, e.g. neon signs.

2.3.5.2 *Emergency switching devices*

Means for emergency switching shall consist of—

(a) a single switching device directly interrupting the incoming supply; or

(b) a combination of several items of electrical equipment operated by one single action resulting in the removal of the hazard by interrupting the appropriate supply.

Exception: Emergency stopping may include the retention of supply for electric braking facilities.

* Devices for emergency switching shall—

(i) be capable of breaking the full-load current of the relevant parts of the electrical installation, taking account of stalled motor currents where appropriate; and

(ii) be manually operated directly interrupting the main circuit, where practicable. A device, such as a circuit-breaker or a contactor operated by remote control, shall open on de-energization of the coil, or another technique of suitable reliability shall be employed; and

(iii) be provided with means of operation capable of latching or being restrained in the 'OFF' or 'STOP' position; and

(iv) not re-energize the relevant part of the electrical installation upon release of the device; and

(v) where danger is likely to occur, require manual reset before the electrical equipment can be started.

Plugs and socket-outlets shall not be provided for use as a means for emergency switching.

Exception: Where electrical equipment is energized from a socket-outlet, a switch associated with the socket-outlet may be used for emergency switching.

2.3.5.3 *Installation*

Devices for emergency switching, including stopping, shall be so placed as to be readily accessible and identifiable at places where danger might occur, and at any additional remote position from which a device may need to be operated in the case of emergency.

2.3.5.4 *Identification*

Devices for emergency switching, including emergency stopping, shall be so placed and marked as to be readily identifiable and convenient for their intended use.

auto login of Electrical Workers Licensing Group is licenced to temporarily download this document.
Electrical Workers Licensing Group may print this document but not more than 10% of the documents subscribed to may be held in printed form at any one time.

Copyright Standards New Zealand

The means of operating these devices, such as handles or push-buttons for emergency switching, shall be legibly and permanently identified and coloured red with a contrasting background.

Exception: A lanyard, chain or rope used to provide a facility for remote operation of an emergency stopping device need not be coloured red, e.g. a lanyard above a conveyor.

2.3.6 Shutting down for mechanical maintenance

2.3.6.1 *General*

Means of disconnecting electricity supply (shutting down) shall be provided where mechanical maintenance of electrically powered equipment might involve a risk of physical injury.

NOTES:

1 Such injuries include burns and those caused by radiated heat and unexpected mechanical movements.

2 Electrically powered mechanical equipment may include rotating machines, heating elements and electromagnetic equipment.

3 Examples of electrical installations where means of shutting down for mechanical maintenance are used include cranes, lifts, escalators, conveyors, machine tools and pumps.

4 Systems powered by other means, e.g. pneumatic, hydraulic or steam, are not within the scope of this Clause. In such cases, shutting down any associated supply of electricity may not be sufficient to ensure safety.

Suitable means, such as facilities for locking the means of shutting down in the open position, the enclosure of the means of shutting down in a lockable enclosure or facilities for the attachment of a warning notice or notices, shall be provided to prevent operation of the means of shutting down and electrically powered equipment from being inadvertently started during mechanical maintenance.

Exception: Locking facilities or a lockable enclosure need not be provided where the means of shutting down is continuously under the control of the person performing such maintenance.

2.3.6.2 *Devices for shutting down*

Devices for shutting down for mechanical maintenance shall—

(a) require manual operation; and

(b) clearly and reliably indicate the ‘OFF’ position; and

(c) be designed or installed so as to prevent unintentional closure.

NOTE: Such closure might be caused by impact, vibration or the like.

2.3.6.3 *Installation*

Devices for shutting down for mechanical maintenance shall be inserted in the main circuit.

COPYRIGHT

Electrical Workers Licensing Group may print this document but not more than 10% of the documents subscribed to may be held in printed form at any one time.
auto login of Electrical Workers Licensing Group is licenced to temporarily download this document.

Copyright Standards New Zealand

Where switches are provided for this purpose, they shall be capable of interrupting the full-load current of the relevant part of the electrical installation. They need not interrupt all live conductors.

Exception: Interruption of the control circuit of a drive or the like may occur where—

(a) supplementary safeguards, such as mechanical restrainers are provided; or

(b) direct interruption of the main supply is achieved by another means.

NOTE: Shutting down for mechanical maintenance may be achieved by devices, such as switches, circuit-breakers or plugs and sockets.

A device located remotely from the electrical equipment it controls, which is used for shutting down for mechanical maintenance, shall be provided with facilities for securing it in the open position.

2.3.6.4 *Identification*

Devices for shutting down for mechanical maintenance shall be placed and marked so as to be readily identifiable and convenient for their intended use.

2.3.7 Functional (control) switching

2.3.7.1 *General*

Functional switching may be used where switching of electrical equipment, or part of an electrical installation, is required for operational control only and not for safety reasons.

NOTE: Functional switching devices may be switches, semiconductor (solid-state) devices, or contactors.

A functional switching device shall be provided for each part of a circuit or item of apparatus that may be required to be controlled independently of other parts of the electrical installation or apparatus.

A single functional switching device may control several items of apparatus intended to operate simultaneously.

NOTE: The switching device may form part of the apparatus.

2.3.7.2 *Functional switching devices*

Disconnectors, fuses or links shall not be used for functional switching.

Functional switching devices shall be suitable for the most onerous of the duties that they might be required to perform.

NOTE: The type of loading, the frequency of operation, and the anticipated number of operations should be taken into account when assessing the most onerous duty. (Systems of duty classification are found in the Standards relevant to the electrical equipment concerned, or in the switch manufacturer's information.)

Functional switching devices need not switch all live conductors of a circuit.

COPYRIGHT

Copyright Standards New Zealand

auto login of Electrical Workers Licensing Group is licenced to temporarily download this document.
Electrical Workers Licensing Group may print this document but not more than 10% of the documents subscribed to may be held in printed form at any one time.

Functional switching devices controlling loads having a significantly low power factor, such as motors or fluorescent lighting, shall be subject to an appropriate de-rating factor.

Exception: No de-rating factor need apply where the device has been designed for the purpose, e.g. switches having a utilization category of AC23A in accordance with AS/NZS IEC 60947.3, used to control circuits of fluorescent lighting are deemed to be designed for the purpose.

2.3.7.3 *Identification*

Functional switching devices need not be identified to indicate the 'ON' or 'OFF' position.

Exception: Appliance switches shall be identified to include the 'OFF' position, in accordance with AS/NZS 61058.1.

2.3.7.4 *Control circuits*

Control circuits shall be designed, arranged and protected to limit dangers resulting from a fault between the control circuit and other conductive parts liable to cause malfunction, e.g. inadvertent operations of the controlled apparatus.

2.4 FAULT PROTECTION

2.4.1 General

The following methods of fault protection are recognized in this Standard:

* (a) Automatic disconnection of supply, in accordance with Clause 1.5.5.3 and Clause 5.7.

(b) The use of Class II equipment or equivalent insulation, in accordance with Clause 1.5.5.4.

(c) Electrical separation, in accordance with Clauses 1.5.5.5 and 7.4.

The requirements for protection by means of automatic disconnection of supply are set out in Clauses 2.4.2, 2.4.3, 2.5 and 2.6.

2.4.2 Protection by automatic disconnection of supply

Protection by means of automatic disconnection of supply is intended to limit the prospective touch voltage arising between simultaneously accessible conductive parts in the event of a fault between a live part and exposed conductive parts or a protective earthing conductor.

This protection shall be achieved by—

(a) provision of a system of earthing in which exposed conductive parts are connected to a protective earthing conductor, in accordance with Section 5; and

(b) disconnection of the fault by an overcurrent protective device or an RCD.

COPYRIGHT

Copyright Standards New Zealand

auto login of Electrical Workers Licensing Group is licenced to temporarily download this document.
Electrical Workers Licensing Group may print this document but not more than 10% of the documents subscribed to may be held in printed form at any one time.

2.4.3 Types of devices

A device used for protection by automatic disconnection of supply shall not be capable of automatically re-closing. The following types of devices may be employed to provide automatic disconnection of supply:

(a) Enclosed fuse-links complying with the appropriate part(s) of the IEC 60269 series.

(b) Miniature overcurrent circuit-breakers complying with AS/NZS 60898 series or AS/NZS 3111.

(c) Moulded-case circuit-breakers complying with AS/NZS IEC 60947.2.

(d) Fixed setting RCDs complying with AS/NZS 3190, AS/NZS 61008.1 or AS/NZS 61009.1.

(e) Other devices, with no automatic reclose function, having characteristics similar to any of the devices listed in Items (a) to (d).

Semi-enclosed rewireable fuses shall not be used.

Exception: Devices with an automatic reclose function of the type that automatically verifies the insulation is satisfactory before the device recloses are permitted.

2.4.4 Auto-reclose devices

A device may be of the auto-reclose type provided that the following conditions are met:

(a) The device shall not be installed to meet the requirements of Clause 1.5.6.

(b) The automatic reclose function cannot be engaged after manually switching off.

(c) A warning notice is clearly displayed indicating that the automatic reclose function of the device must be disengaged, the device manually switched off, and the requirements of Clause 2.3.2 applied before performing any work on the electrical installation.

(d) There is a time delay before the first automatic reclose (e.g. 3 min).

(e) The number of reclosing operations is limited (e.g. to 3).

Exception: Item (a) need not apply if the device is of a type that automatically verifies the insulation is satisfactory before the device recloses.

2.5 PROTECTION AGAINST OVERCURRENT

2.5.1 General

* **2.5.1.1** *General requirements*

Active conductors shall be protected by one or more devices that automatically disconnect the supply in the event of overcurrent,

COPYRIGHT

Copyright Standards New Zealand

auto login of Electrical Workers Licensing Group is licenced to temporarily download this document.
Electrical Workers Licensing Group may print this document but not more than 10% of the documents subscribed to may be held in printed form at any one time.

before such overcurrent attains a magnitude or duration that could cause injury to persons or livestock or damage because of excessive temperatures or electromechanical stresses in the electrical installation.

No fuse shall be inserted in a neutral conductor. Protective devices that incorporate a switching function in the neutral conductor shall comply with the requirements of Clause 2.3.2.1.2(b).

Protection against overcurrent shall consist of protection against—

(a) overload current, in accordance with Clauses 2.5.2 and 2.5.3; and

(b) short-circuit current, in accordance with Clauses 2.5.2 and 2.5.4.

Protection against overload current and short-circuit current shall be coordinated, in accordance with Clause 2.5.6.

NOTES:

1 Overcurrent protection is inseparably linked to the current-carrying capacity and temperature limits of the protected cable.

* Reduction in current-carrying capacity of conductors may occur by a change in cross-sectional area, method of installation, or type of cable or conductor.

2 Appendix I provides guidance on the ratings of overload protective devices where alterations or repairs involve the use of existing imperial conductors.

2.5.1.2 *Consumer mains*

* Overcurrent protection of consumer mains shall be arranged in accordance with one of the following:

(a) Short-circuit protection and overload protection shall be provided at the origin of the consumer mains (the point of supply) (see Notes 1 and 2).

(b) Short-circuit protection shall be provided at the origin of the consumer mains and overload protection shall be provided at the main switchboard (see Notes 1, 3, and 4.)

(c) Short-circuit protection need not be provided where overload protection is provided at the main switchboard and the consumer mains are constructed and installed in accordance with Clause 3.9.7.1.2 (see Notes 1 and 5).

This arrangement is regarded as unprotected consumer mains.

A1 Unprotected consumer mains are those that are not protected by a service protective device as shown in Figure 2.1. Refer to Figures 5.6(A), 5.6(B) and 5.6(C) for the earthing requirements for enclosures containing service protection devices.

auto login of Electrical Workers Licensing Group is licenced to temporarily download this document.
Electrical Workers Licensing Group may print this document but not more than 10% of the documents subscribed to may be held in printed form at any one time.

Copyright Standards New Zealand

A1

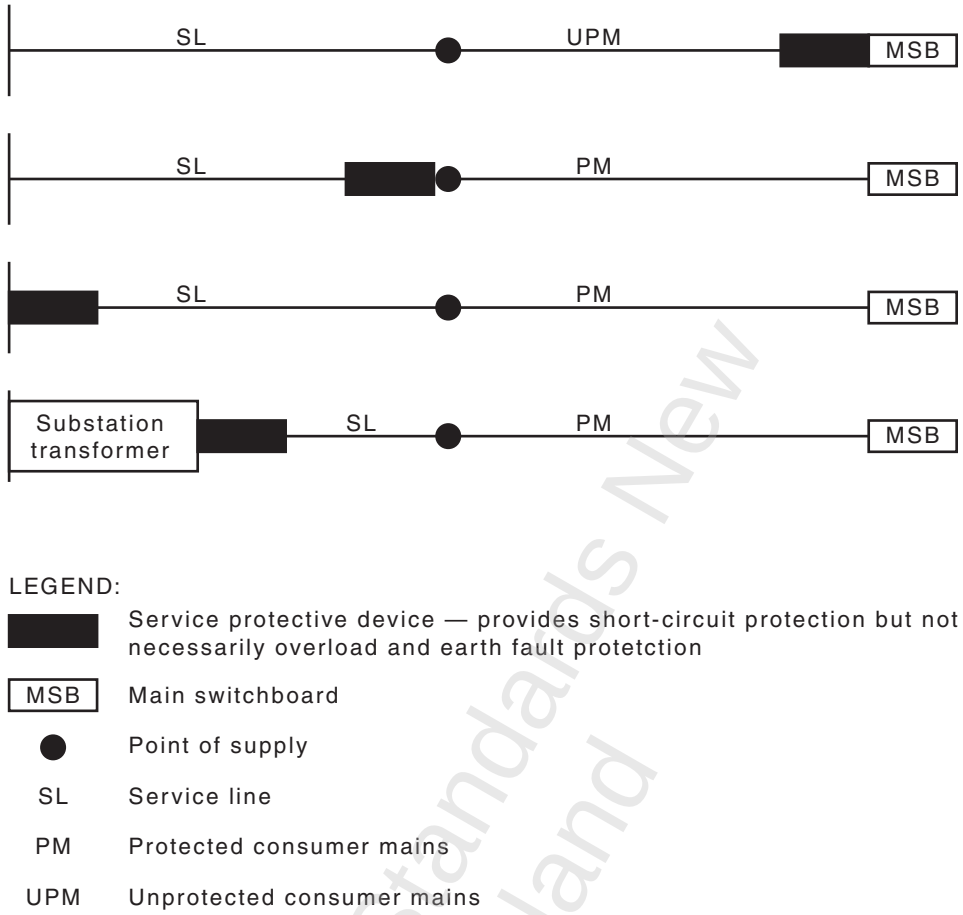

FIGURE 2.1 TYPICAL EXAMPLES OF UNPROTECTED AND PROTECTED CONSUMER MAINS

NOTES:

1 Where consumer mains provide supply to safety services, compliance with Clause 7.2.2 is also required. Negotiation with the electricity distributor during installation planning stage is recommended.

2 An electricity distributor's low voltage service protective device may provide overload and short-circuit protection for consumer mains and may satisfy Clauses 2.5.3.3 and 2.5.4.3 under certain conditions. Negotiation with the electricity distributor during installation planning stage is recommended.

3 An electricity distributor's low voltage service protective device may provide short-circuit protection only for consumer mains under certain conditions. Negotiation with the electricity distributor during installation planning stage is recommended.

4 Where no low voltage service protection device is installed on the secondary side of an electricity distributor's transformer, an appropriately sized high voltage fuse or circuit-breaker may provide short-circuit protection for the consumer mains under certain conditions. Negotiation with the electricity distributor during installation planning stage is recommended.

Copyright Standards New Zealand

auto login of Electrical Workers Licensing Group is licenced to temporarily download this document.
Electrical Workers Licensing Group may print this document but not more than 10% of the documents subscribed to may be held in printed form at any one time.

5 Consumer mains supplying one or more circuits that are individually protected against overload should be provided with overload protection where the sum of the current ratings of the individual circuit-breakers so supplied exceeds the current-carrying capacity of the consumer mains.

2.5.1.3 *Submains and final subcircuits—General arrangement*

An overcurrent protective device or devices ensuring protection against overload current and short-circuit current shall be placed at the origin of every circuit and at each point where a reduction occurs in the current-carrying capacity of the conductors.

* NOTE: The general arrangement of protective devices is shown in Figures 2.2(A) and 2.2(B).

Exceptions:

1 Overcurrent protective devices shall not be provided on circuits where the unexpected interruption of the supply could cause a greater danger than overcurrent (see Clause 2.5.1.4).

2 Overcurrent protective devices may be located at an alternative position in accordance with Clauses 2.5.3.3 and 2.5.4.4.

3 Overcurrent protective devices may be omitted in accordance with Clauses 2.5.3.4 and 2.5.4.5.

2.5.1.4 *Omission of protective device for safety reasons*

Devices for protection against overcurrent shall not be provided for circuits where unexpected opening of the circuit could cause a danger greater than overcurrent.

NOTES:

1 Examples of such circuits are certain safety system supplies, lifting magnets, exciter circuits of machines and the secondary circuits of current transformers. In such cases, the provision of an overload alarm is strongly recommended.

2 The omission of protective devices is shown in Figure 2.3.

* **2.5.2 Devices for protection against both overload and short-circuit currents**

Protective devices providing protection against both overload and short-circuit current shall be capable of breaking any overcurrent up to and including the prospective short-circuit current at the point where the device is installed.

The device shall comply with the requirements of Clauses 2.5.3 and 2.5.4.

Exception: A protective device having a breaking capacity below the value of the prospective short-circuit current may be used in conjunction with another device in accordance with Clause 2.5.7.2.

Protective devices may be one of the following:

(a) Circuit-breakers incorporating short-circuit and overload releases.

COPYRIGHT

Copyright Standards New Zealand

auto login of Electrical Workers Licensing Group is licenced to temporarily download this document.
Electrical Workers Licensing Group may print this document but not more than 10% of the documents subscribed to may be held in printed form at any one time.

(b) Fuse-combination units (CFS units).

(c) Fuses having enclosed fuse-links (HRC fuses).

(d) Circuit-breakers in conjunction with fuses.

Semi-enclosed rewireable fuses shall not be used.

NOTES:

1 General-purpose fuses (Type gG) and overcurrent circuit-breakers normally combine overload and short-circuit protection in the one device.

2 A fuse comprises all the parts that form the complete protective device.

3 Circuit-breakers that meet the requirements for the type of protection required and replace a fuse-carrier by insertion in a fuse base are acceptable. However, because of interchangeability with semi-enclosed rewireable fuse-carriers, such circuit-breakers should be rated at not more than 80% of the current-carrying capacity of the protected conductor.

* 4 Screw-type fuses of the enclosed type that meet the requirements of IEC 60269-3 System A Type D are acceptable.

2.5.3 Protection against overload current

2.5.3.1 *Coordination between conductors and protective devices*

The operating characteristics of a device protecting a conductor against overload shall satisfy the following two conditions:

$$I_B \leq I_N \leq I_Z \quad \text{. . . 2.1}$$

$$I_2 \leq 1.45 \times I_Z \quad \text{. . . 2.2}$$

where

I_B = the current for which the circuit is designed, e.g. maximum demand

I_N = the nominal current of the protective device

I_Z = the continuous current-carrying capacity of the conductor (see the AS/NZS 3008.1 series)

I_2 = the current ensuring effective operation of the protective device and may be taken as equal to either—

(a) the operating current in conventional time for circuit-breakers (1.45 I_N); or

(b) the fusing current in conventional time for fuses (1.6 I_N for fuses in accordance with the IEC 60269 series).

NOTES:

1 To satisfy Equation 2.2, the nominal current I_N of a fuse should not exceed 90% of I_Z (1.45/1.6 = 0.9), therefore—

for circuit-breakers	Equation 2.1 applies
for HRC fuses	$I_B \leq I_N \leq 0.9 I_Z$ . . . 2.3

COPYRIGHT

Copyright Standards New Zealand

auto login of Electrical Workers Licensing Group is licenced to temporarily download this document.
Electrical Workers Licensing Group may print this document but not more than 10% of the documents subscribed to may be held in printed form at any one time.

2 For adjustable devices, the nominal current I_N is the current setting selected.

3 Protection in accordance with this Clause will not ensure complete protection in certain cases, e.g. against sustained overcurrent less than I_Z, nor will it necessarily result in an economical solution. Therefore, it is assumed that the circuit is so designed that small overloads of long duration will not frequently occur. Such overloads can cause premature ageing of the insulation.

4 For further information, see Paragraph B3.2.1, Appendix B.

* **2.5.3.2** *Position of overload protective device—General arrangement*

In accordance with Clause 2.5.1.3, a device providing protection against overload shall be installed at the origin of every circuit and at each point where a reduction occurs in the current-carrying capacity of the conductors.

Exception: In accordance with the conditions set out in Clauses 2.5.3.3 and 2.5.3.4, an overload protective device may be located in another position or may be omitted.

2.5.3.3 *Alternative position of overload protective device*

A device providing protection of a conductor against overload current may be placed at a point other than the origin of the circuit provided that—

(a) the conductor has no branch circuits or socket-outlets connected between the origin of the conductor and the overload protective device; or

(b) the conductor supplies one or more circuits that are individually protected against overload, such as within a switchboard or busway, and the sum of the current ratings of the circuit protective devices supplied by the conductor does not exceed the current-carrying capacity of the conductor.

NOTE: Examples of alternative positions of overload protective devices are shown in Figures 2.4 and 2.5.

* **2.5.3.4** *Omission of overload protective device*

The following applies:

(a) Where unexpected opening of the circuit could cause a danger greater than overload, devices for protection against overload current shall be omitted, in accordance with Clause 2.5.1.4.

(b) Devices for protection against overload current may be omitted provided that the conductor is not situated in a location presenting a fire risk, or a risk of explosion, or where requirements for special installations and locations specify different conditions, and the conductor—

(i) is situated on the load side of a change in current-carrying capacity that is effectively protected against overload by a protective device placed on the supply side of the origin of the conductor; or

COPYRIGHT

auto login of Electrical Workers Licensing Group is licenced to temporarily download this document.
Electrical Workers Licensing Group may print this document but not more than 10% of the documents subscribed to may be held in printed form at any one time.

Copyright Standards New Zealand

(ii) supplies electrical equipment that is not capable of causing an overload current and the conductor has no branch circuits or socket-outlets connected between the origin of the conductor and the electrical equipment; or

(iii) is provided for installations of telecommunications, control, signalling and the like.

NOTES:

1 A heating appliance is an example of equipment not capable of causing an overload current.

2 Examples of omission of overload protection are shown at Figures 2.6 and 2.7.

2.5.4 Protection against short-circuit current

NOTE: The requirements of this Clause only take into account cases of short-circuit anticipated between conductors belonging to the same circuit.

2.5.4.1 *Determination of prospective short-circuit current*

The prospective short-circuit current at every relevant point of the electrical installation shall be determined either by calculation or by measurement.

* **2.5.4.2** *Characteristics of short-circuit protective devices*

Short-circuit protective devices shall meet the following conditions:

(a) The breaking capacity shall be not less than the prospective short-circuit current at the point where the devices are installed.

Exception: A device having a lower breaking capacity is permitted if another protective device having the necessary breaking capacity is installed on the supply side. In this case, the characteristics of the devices shall be coordinated so that the energy let through by these two devices does not exceed that which can be withstood without damage by the device on the load side and the conductors protected by those devices.

NOTE: In certain cases, other characteristics may need to be taken into account, such as dynamic stresses and arcing energy, for the device on the load side. Details of the characteristics needing coordination should be obtained from the manufacturers of the devices concerned.

(b) All currents caused by a short-circuit occurring at any point of a circuit shall be interrupted before the temperature of the conductors reaches the permissible limit.

For short-circuits of duration up to 5 s, the time in which a given short-circuit current will raise the conductors from the highest permissible temperature in normal duty to the maximum permissible short-circuit temperature may, as an approximation, be calculated from the following equation:

$$t = \frac{K^2 S^2}{I^2} \qquad \ldots 2.4$$

COPYRIGHT

Copyright Standards New Zealand

auto login of Electrical Workers Licensing Group is licenced to temporarily download this document.
Electrical Workers Licensing Group may print this document but not more than 10% of the documents subscribed to may be held in printed form at any one time.

where

t = duration, in seconds

K = factor dependent on the material of the conductor, the insulation and the initial and the final temperatures

S = cross-sectional area of the conductor, in mm^2

I = effective short-circuit current, in amps (r.m.s)

NOTES:

1 Values of K for conductors in various conditions of service are given in the AS/NZS 3008.1 series, e.g.—

For PVC insulated copper conductors of cross-sectional area not more than 300 mm^2, K = 111 for 75°C initial conductor temperature.

2 For very short duration (<0.1 s) where asymmetry of the current is of importance and for current limiting devices, K^2S^2 should be greater than the value of the let-through energy (I^2t) stated by the manufacturer of the protective device.

3 The nominal current of the short-circuit protective device may be greater than the current-carrying capacity of the cable.

4 Other methods of calculation are permissible.

2.5.4.3 *Position of devices for short-circuit protection*

In accordance with Clause 2.5.1.3, a device providing protection against short-circuit shall be installed at the origin of every circuit and at each point where a reduction occurs in the current-carrying capacity of the conductors.

Exception: In accordance with the conditions set out in Clauses 2.5.4.4 and 2.5.4.5, a short-circuit protective device may be located in another position or may be omitted.

NOTE: Such devices may be circuit-breakers with a short-circuit release or HRC fuses.

* **2.5.4.4** *Alternative position of short-circuit protective device*

2.5.4.4.1 *General*

A device providing protection against short-circuit current may be placed at another point in the circuit under the conditions of Clauses 2.5.4.4.2 or 2.5.4.4.3.

* **2.5.4.4.2** *Condition 1*

The part of the conductor between the point of reduction of cross-sectional area or other change and the position of the protective device shall be such that—

(a) its length does not exceed three metres; and

(b) it is protected mechanically or otherwise so that the risk of short-circuit is reduced to a minimum; and

COPYRIGHT

Copyright Standards New Zealand

auto login of Electrical Workers Licensing Group is licenced to temporarily download this document.
Electrical Workers Licensing Group may print this document but not more than 10% of the documents subscribed to may be held in printed form at any one time.

(c) it is installed in such a manner as to reduce to a minimum the risk of fire or other danger to persons, livestock and property.

NOTES:

1 Insulated conductors in a metallic wiring enclosure are considered to comply with this requirement.

2 An example of the alternative position of a short-circuit protective device is shown at Figure 2.8.

2.5.4.4.3 *Condition 2*

A protective device may be placed on the supply side of the reduced cross-sectional area or other change, provided that it possesses an operating characteristic such that it protects the circuit situated on the load side against short-circuit, in accordance with Clause 2.5.4.2. A1

NOTE: This may be verified by comparing the short-circuit current level just before the branch device with the performance characteristics of the preceding device.

2.5.4.5 *Omission of devices for short-circuit protection*

Devices for protection against short-circuit current may be omitted under the following conditions:

(a) Where unexpected opening of the circuit could cause a danger greater than short-circuit, devices for protection against short-circuit shall be omitted, in accordance with Clause 2.5.1.4.

(b) Consumer mains constructed in accordance with Clause 3.9.7.1 need not be provided with short-circuit protection.

(c) Conductors connecting generators, transformers, rectifiers or batteries to their associated switchboards need not be provided with short-circuit protection provided that—

(i) the wiring is carried out in such a way as to reduce the risk of a short-circuit to a minimum; and

(ii) the wiring is not placed close to flammable material; and

(iii) the short-circuit protective devices for the remainder of the circuit are placed on the associated switchboard.

NOTE: Examples of the omission of devices for short-circuit protection are shown in Figures 2.3 and 2.9.

auto login of Electrical Workers Licensing Group is licenced to temporarily download this document.
Electrical Workers Licensing Group may print this document but not more than 10% of the documents subscribed to may be held in printed form at any one time.

Copyright Standards New Zealand

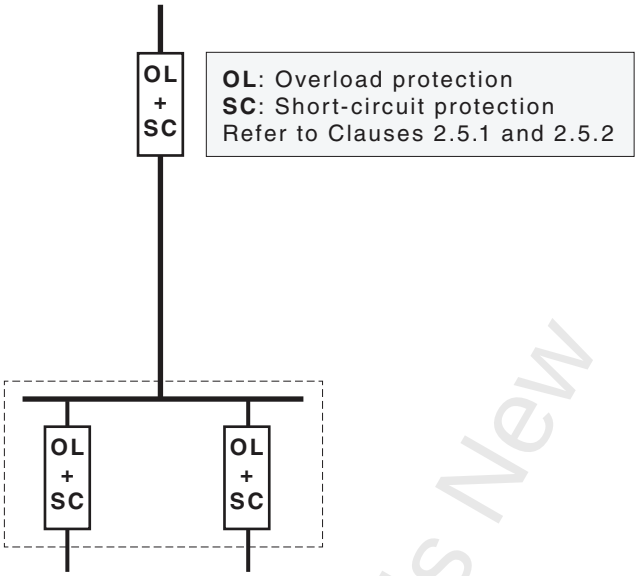

NOTE: Protection is required by Clauses 2.5.2 and 2.5.3.2 to be at the origin of every circuit and at each point where a reduction in current-carrying capacity occurs, unless exceptions in Clauses 2.5.1.3 or 2.5.1.4 apply.

FIGURE 2.2(A) GENERAL PROTECTION AGAINST OVERLOAD (OL) AND SHORT-CIRCUIT (SC) FOR SUBMAINS AND FINAL SUBCIRCUITS

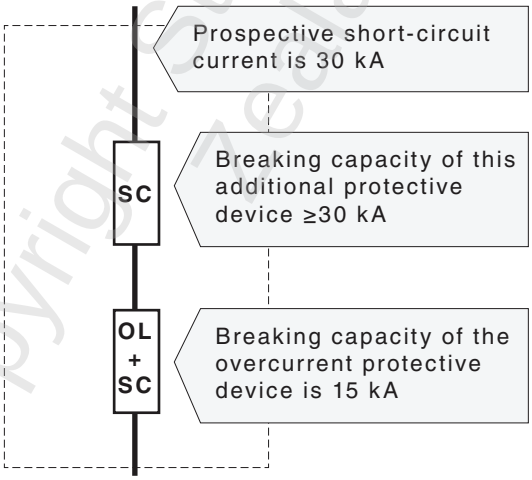

NOTE: Clause 2.5.4.2 requires that the characteristics of the devices be coordinated so that the energy let through by the two devices does not exceed that which can be withstood without damage by the device on the load side and the conductors protected by the two devices. Other characteristics may apply.

FIGURE 2.2(B) PROTECTIVE DEVICE OF LOW BREAKING CAPACITY WITH A DEVICE OF REQUIRED BREAKING CAPACITY INSTALLED ON THE SUPPLY SIDE

COPYRIGHT

Copyright Standards New Zealand

auto login of Electrical Workers Licensing Group is licenced to temporarily download this document.
Electrical Workers Licensing Group may print this document but not more than 10% of the documents subscribed to may be held in printed form at any one time.

auto login of Electrical Workers Licensing Group is licenced to temporarily download this document.
Electrical Workers Licensing Group may print this document but not more than 10% of the documents subscribed to may be held in printed form at any one time.

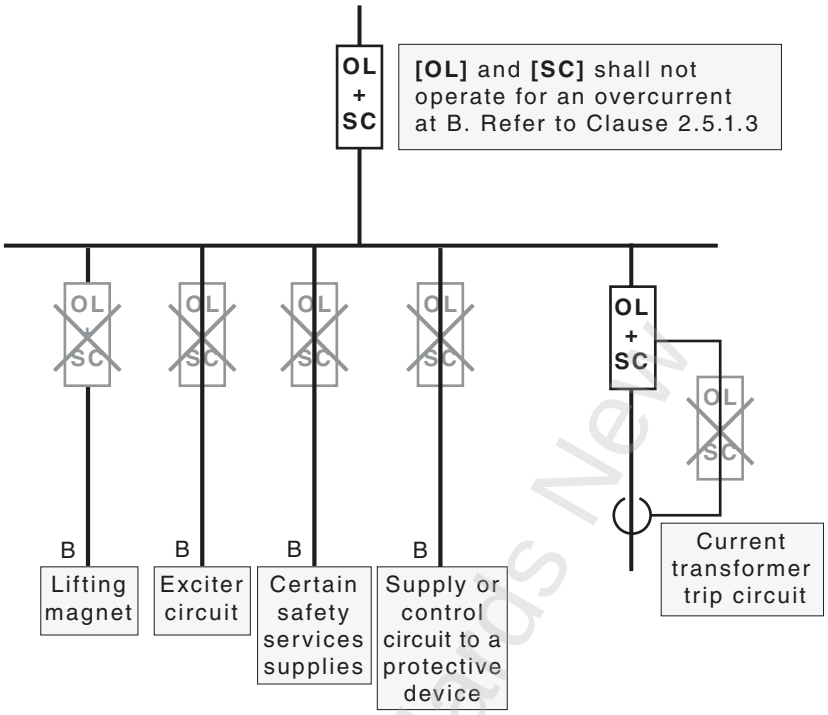

NOTE: Figure 2.3 shows locations where overload and/or short-circuit protection are not permitted for safety reasons. Refer to Clauses 2.5.1.4, 2.5.3.4(a) and 2.5.4.4.

FIGURE 2.3 MANDATORY OMISSION OF OVERLOAD AND/OR SHORT-CIRCUIT PROTECTION

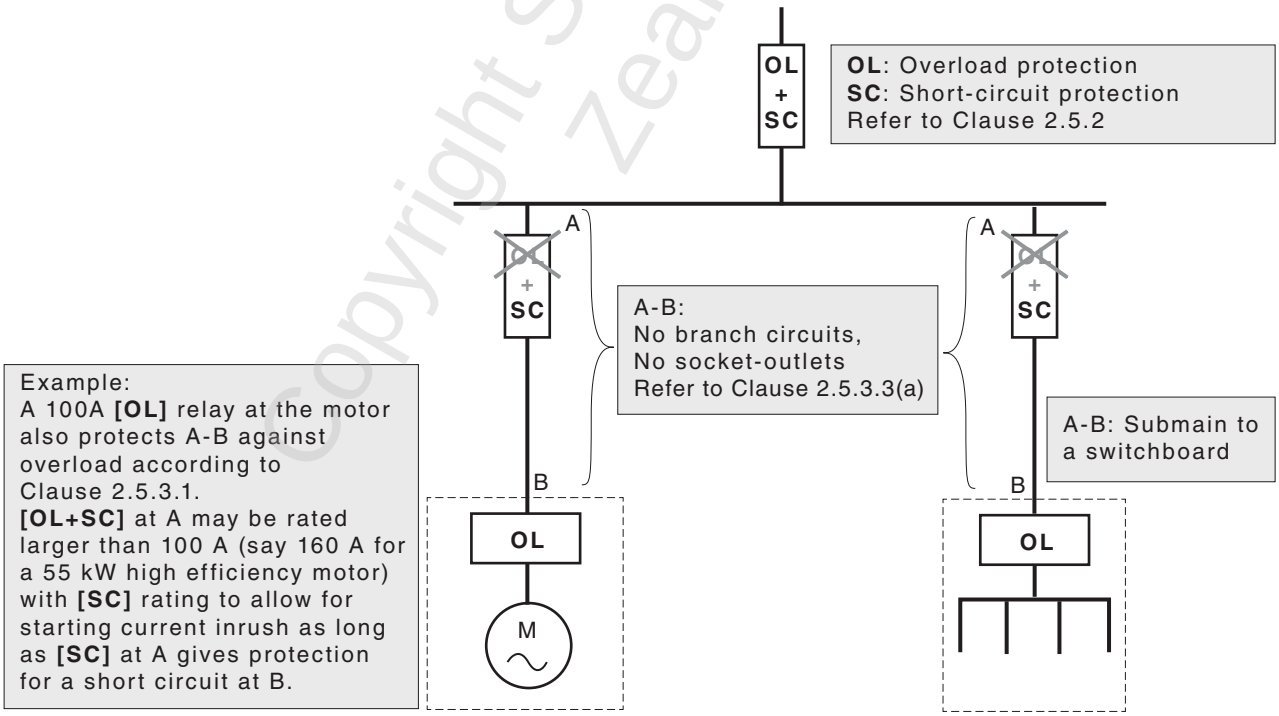

NOTE: Figure 2.4 shows a location where overload protection is at the end of a circuit. The overload protection can be at any point in a circuit subject to Clause 2.5.3.3(a).

FIGURE 2.4 ALTERNATIVE POSITION OF OVERLOAD PROTECTION

COPYRIGHT

auto login of Electrical Workers Licensing Group is licenced to temporarily download this document.
Electrical Workers Licensing Group may print this document but not more than 10% of the documents subscribed to may be held in printed form at any one time.

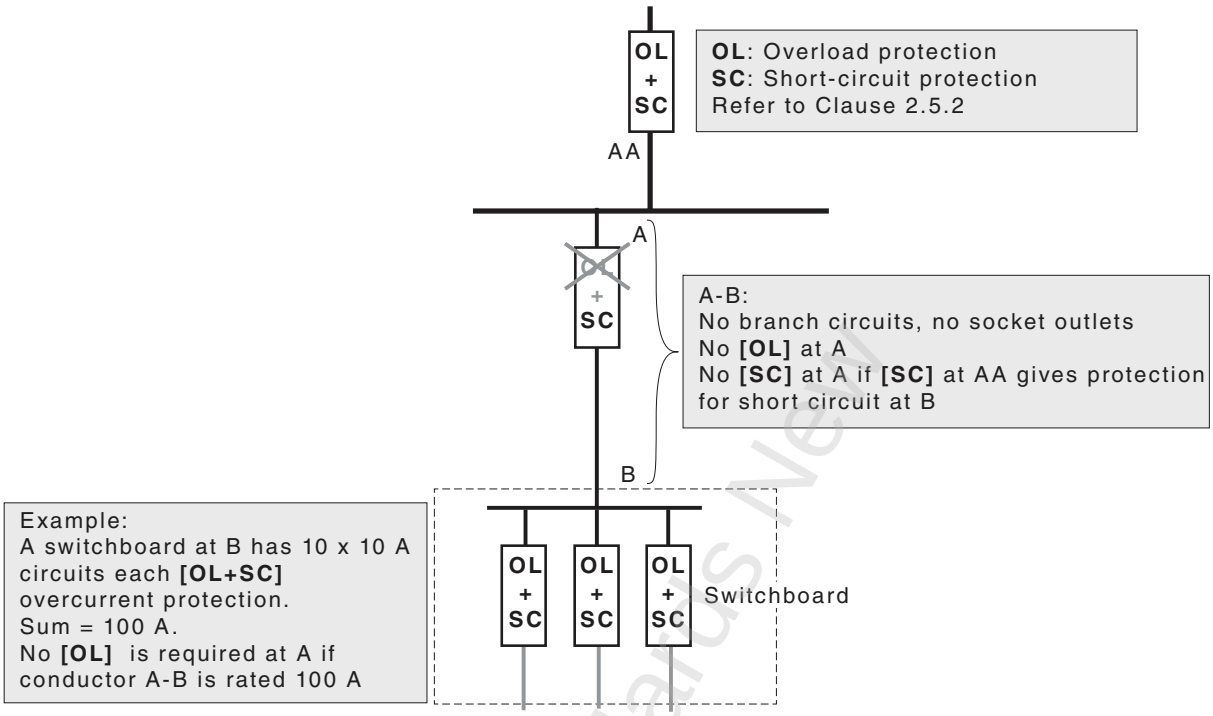

NOTE: Figure 2.5 shows a location where the overload protection is at the load end of the submain, which is permitted if the conditions of Clause 2.5.3.3(b) and the exceptions are satisfied.

FIGURE 2.5 ALTERNATIVE POSITION OF OVERLOAD PROTECTION

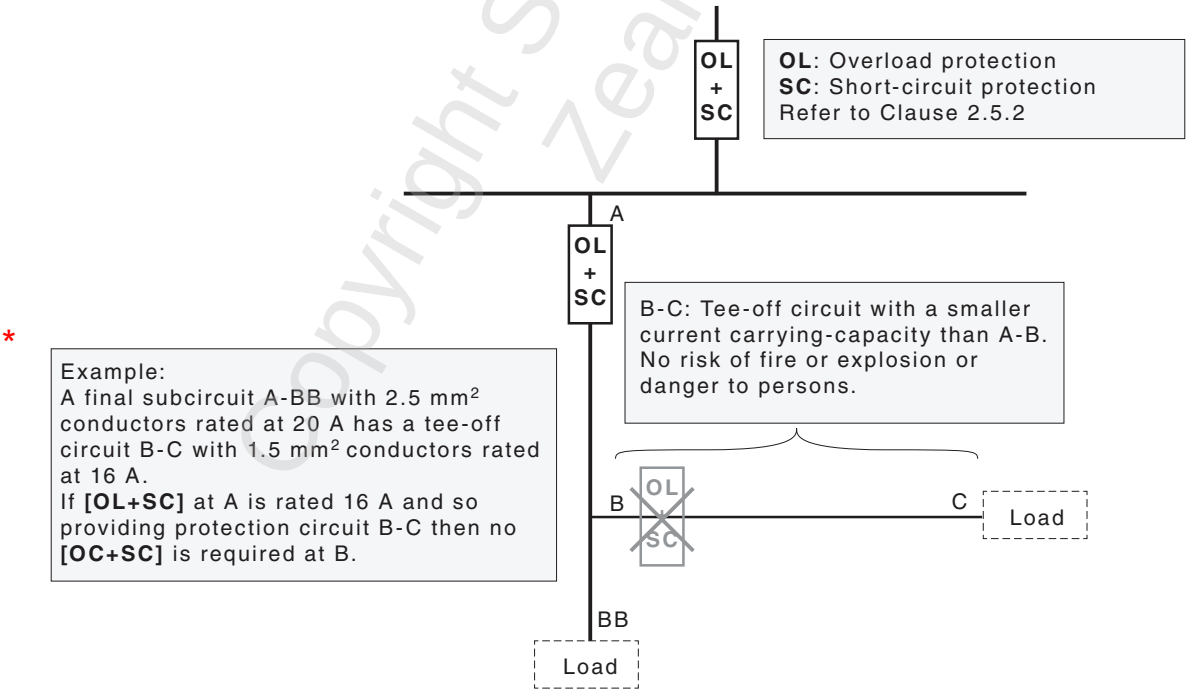

NOTE: The omission of overload protection shown in Figure 2.6 is permitted where a reduced section of tee-off conductor is protected by the upstream protection. Refer to Clause 2.5.3.4(b)(i).

FIGURE 2.6 OMISSION OF OVERLOAD PROTECTION

COPYRIGHT

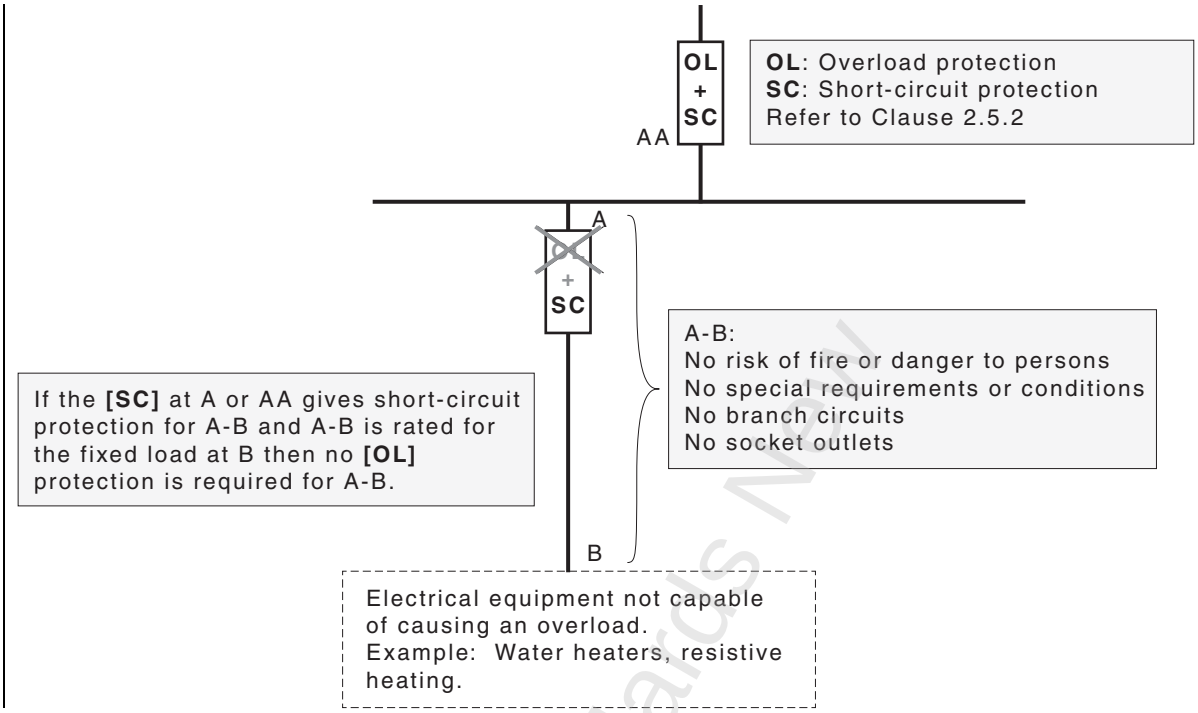

NOTE: The omission of overload protection shown in Figure 2.7 is permitted where the load current is fixed by the connected equipment in accordance with Clause 2.5.3.4(b)(ii).

FIGURE 2.7 OMISSION OF OVERLOAD PROTECTION

Copyright Standards New Zealand

auto login of Electrical Workers Licensing Group is licenced to temporarily download this document.
Electrical Workers Licensing Group may print this document but not more than 10% of the documents subscribed to may be held in printed form at any one time.

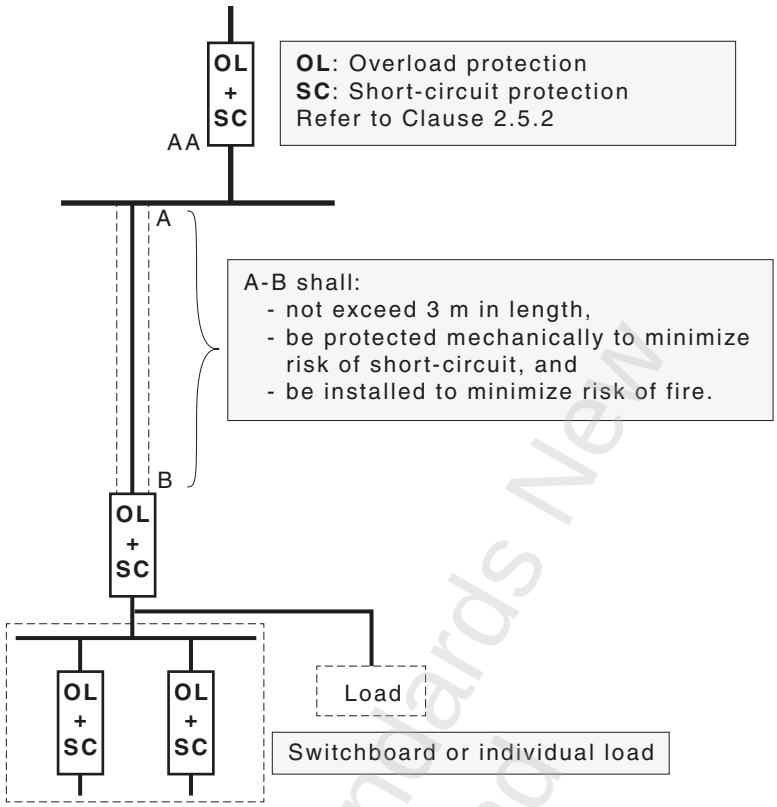

NOTE: Location on the load side of the conductor is permitted if risk of short-circuit is minimized to the stated conditions. Refer to Clause 2.5.3.4(b)(ii).

FIGURE 2.8 ALTERNATIVE POSITION OF SHORT-CIRCUIT PROTECTIVE DEVICE

auto login of Electrical Workers Licensing Group is licenced to temporarily download this document.
Electrical Workers Licensing Group may print this document but not more than 10% of the documents subscribed to may be held in printed form at any one time.

Copyright Standards New Zealand

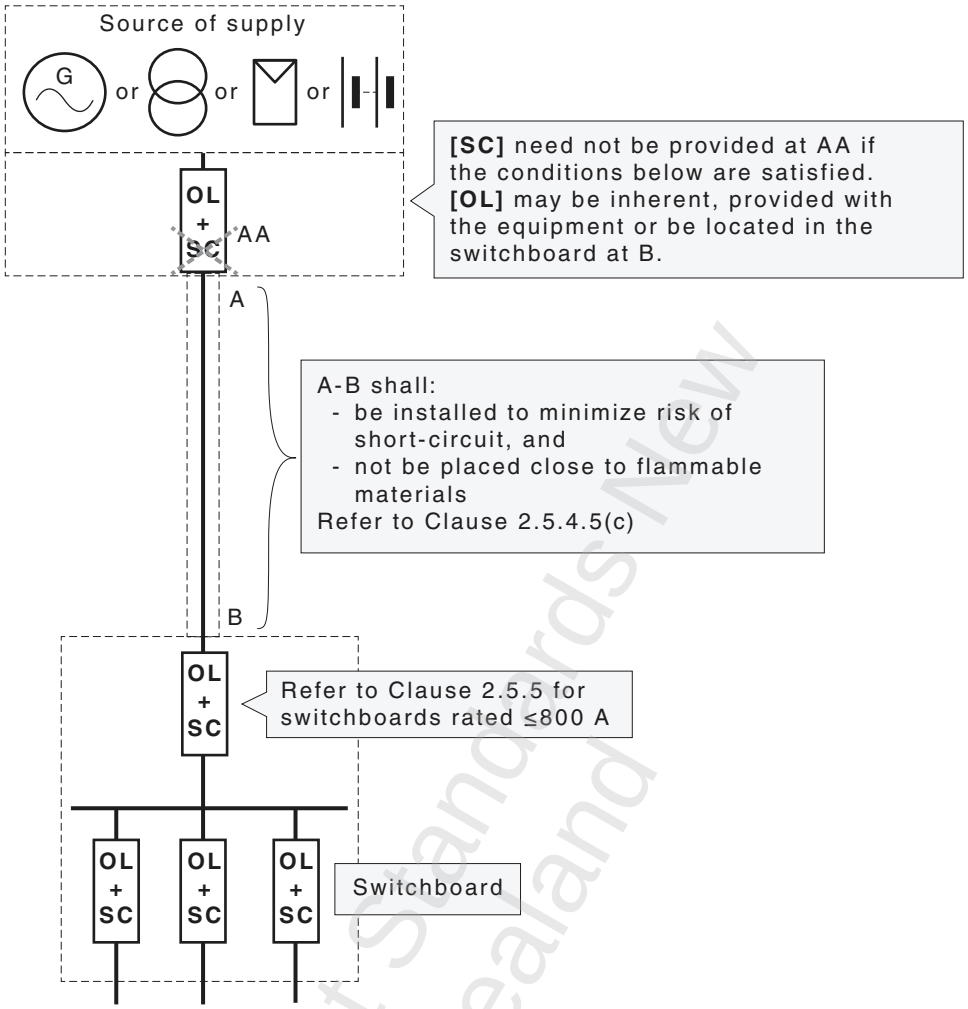

NOTE: Figure 2.9 shows conductors where short-circuit protection need not be provided.

FIGURE 2.9 CONDUCTORS CONNECTING SOURCES OF SUPPLY TO THEIR ASSOCIATED SWITCHBOARD

auto login of Electrical Workers Licensing Group is licenced to temporarily download this document.
Electrical Workers Licensing Group may print this document but not more than 10% of the documents subscribed to may be held in printed form at any one time.

Copyright Standards New Zealand

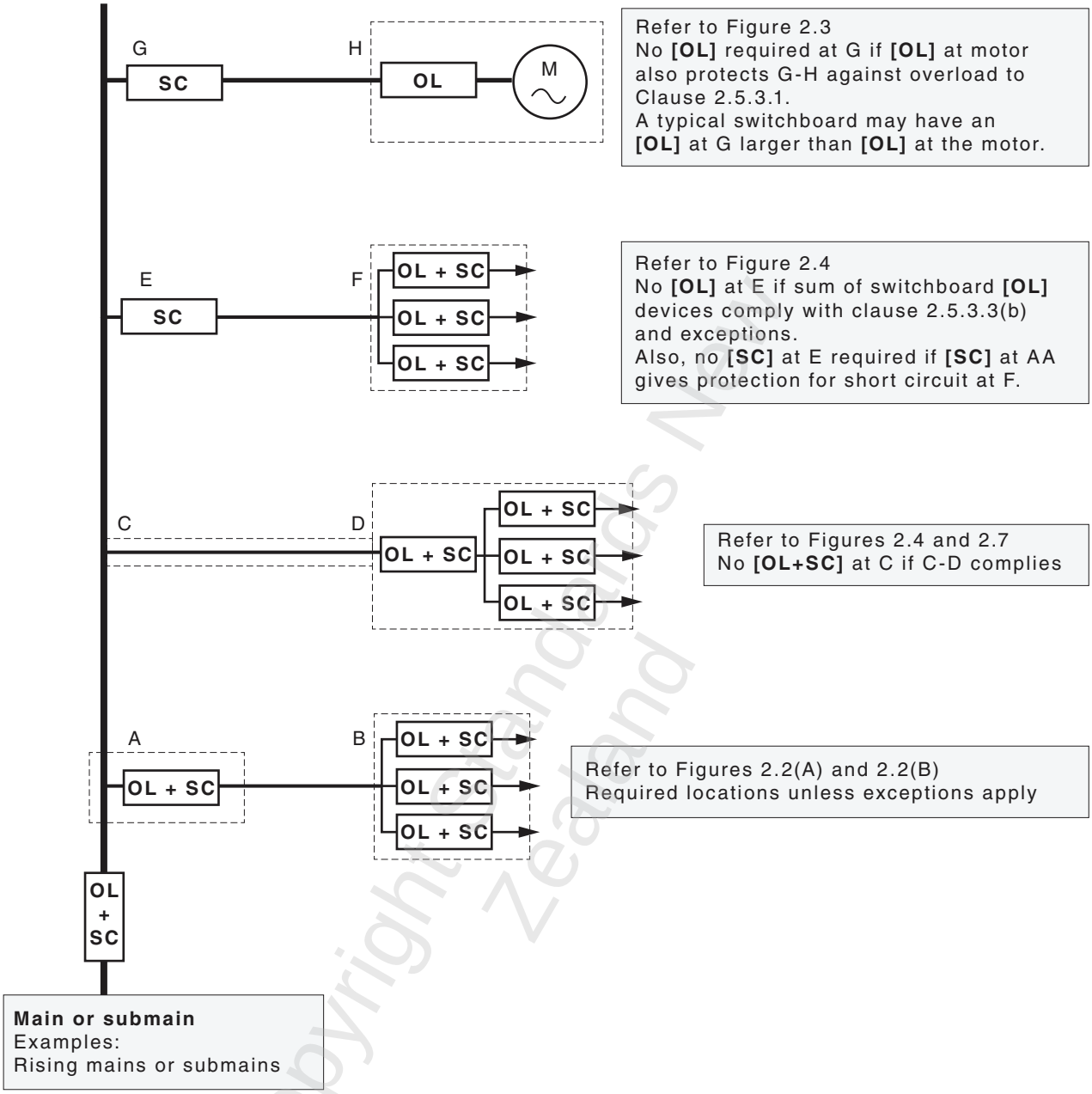

FIGURE 2.10 REQUIRED LOCATIONS AND ALTERNATIVE LOCATIONS OF OVERLOAD AND SHORT-CIRCUIT PROTECTION

* **2.5.5 Protection against switchboard internal arcing fault currents**

2.5.5.1 *General*

Protection against arcing fault currents while the equipment is in service, or is undergoing maintenance, shall be provided for switchboards rated at 800 A or greater per phase.

The supply conductors up to the line side of the protective device(s) within the switchboard shall be provided with means to reduce the probability of initiation of arcing faults by insulation or by separation.

COPYRIGHT

auto login of Electrical Workers Licensing Group is licenced to temporarily download this document.
Electrical Workers Licensing Group may print this document but not more than 10% of the documents subscribed to may be held in printed form at any one time.

Copyright Standards New Zealand

NOTES:

1 Refer to AS/NZS 3439.1 or AS/NZS 61439.1 for switchboard requirements and AS/NZS 3439.2 or AS/NZS 61439.6 for busways.

2 See also Clause 2.5.1.2 regarding requirements for consumer mains.

3 Separation of live supply conductors from each other by insulation or barriers in accordance with this Clause (Clause 2.5.5.1) is not required, e.g. an IP2X enclosure with bare busbars is acceptable.

In addition, the switchboard shall comply with one of the following:

(a) Clause 2.5.5.2 to reduce the probability of initiation of a switchboard internal arcing fault.

(b) Clause 2.5.5.3 to limit as far as practicable the harmful effects of an internal arcing fault.

(c) One of the forms of internal separation required by Clause 2.5.5.2 together with Clause 2.5.5.3 to reduce the probability of initiation and limit, as far as practicable, the harmful effects of an internal arcing fault.

* **2.5.5.2** *Reduction of the probability of the initiation of a switchboard internal arcing fault*

Switchboards rated at 800 A or greater per phase shall be provided with internal separation in accordance with AS/NZS 3439.1 or AS/NZS 61439.2 for—

A1 (a) busbars from functional units; and

(b) functional units from one another (refer to Figure 2.11); and

(c) terminals provided for external conductors from the busbar; and

(d) a safety service circuit section of the switchboard, if any, from the general installation circuit's section, in accordance with Clause 7.2.

NOTES:

1 Separation in accordance with AS/NZS 3439.1 or AS/NZS 61439.2 may be achieved by the insulation of busbars, the use of barriers or by insulated housings, i.e. by the use of a Form 3b, Form 3bi, Form 3bh, Form 3bih, Form 4a, Form 4ah, Form 4aih or Form 4b, Form 4bi, Form 4bh, Form 4bih constructed switchboard.

2 The required degree of protection, IP2X or IP1XB, is to prevent the entry of objects and contact with live parts by a person's finger. To prevent the entry of tools or wires, the degree of protection may be increased, i.e. small tools IP3X or IP2XC (2.5 mm diameter) and wires IP4X or IP3XD (1 mm diameter).

3 Internal arc fault testing of switchboard designs to Annex ZD of AS/NZS 3439.1:2002 or AS/NZS 61439, or IEC/TR 61641 is not required and is considered to be an enhancement of internal separation. These designs are intended to prevent the arc or products of the arc affecting other parts of the switchboard. Arc fault containment is achieved by the arrangement of the busbars and functional units of the switchboard in vented

COPYRIGHT

Copyright Standards New Zealand

auto login of Electrical Workers Licensing Group is licenced to temporarily download this document.
Electrical Workers Licensing Group may print this document but not more than 10% of the documents subscribed to may be held in printed form at any one time.

compartments and relies, for its effectiveness, on compartment access doors being closed during a fault. It is not designed to prevent the initiation of a fault during maintenance and is also not designed to provide switching operator or maintenance personnel protection if any covers are not properly fixed in place.

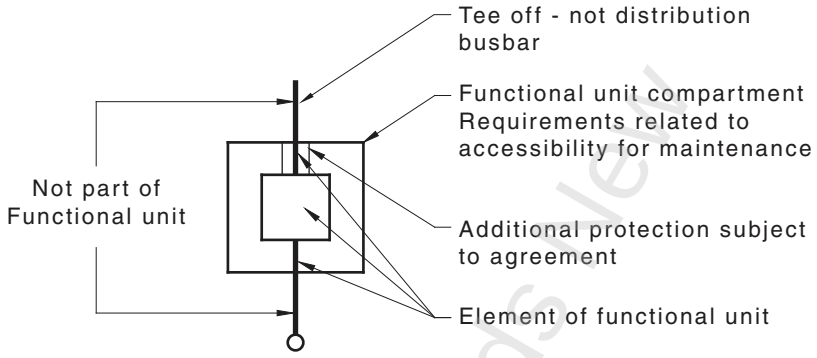

FIGURE 2.11 PARTS OF FUNCTIONAL UNITS

2.5.5.3 *Limitation of the harmful effects of a switchboard internal arcing fault*

Protective devices shall be provided to limit, as far as practicable, the harmful effects of a switchboard internal arcing fault by automatic disconnection.

The arcing fault current between phases, or between phase and earth, is deemed to be in the range of 30% to 60% of the prospective short-circuit current.

Protection shall be initiated, i.e. pick up at a current less than 30% of the three-phase prospective fault level.

To minimize damage to the switchboard, the interrupting time shall not exceed the value obtained from the following equation.

The general damage limit is given by the following:

$$\text{Clearing time } t = \frac{k_e \times I_r}{I_f^{1.5}} \qquad \ldots 2.5$$

where

t = clearing time, in seconds

I_f = 30% of the prospective fault current

I_r = current rating of the switchboard

k_e = 250 constant, based on acceptable volume damage

COPYRIGHT

Copyright Standards New Zealand

auto login of Electrical Workers Licensing Group is licenced to temporarily download this document.
Electrical Workers Licensing Group may print this document but not more than 10% of the documents subscribed to may be held in printed form at any one time.

Example:

The maximum arcing fault clearing time at a customer's 800 A-rated main switchboard with a prospective fault current at the switchboard of 16.67 kA.

Therefore—

I_f = *30% of 16.67 kA = 5 kA*

$$t = \frac{250 \times 800}{5000^{1.5}} = 0.57\ s$$

i.e. the protective device settings are set to clear an arcing fault of 5 kA in less than 0.57 s.

NOTE: Overcurrent protective devices should be set to as low an initiation current as possible while still maintaining the correct function of the installation, e.g. set higher than motor-starting currents.

Earth fault protective devices shall have a maximum setting of 1200 A.

The settings of protective devices shall be verified by inspection [see Clause 8.2.2(c)(ii)].

NOTE: The electricity distributor should be consulted for discrimination requirements between installation protective devices and the electricity distributor's service protective devices. The curves and settings of service protective devices will be required.

Where arc detectors are used, immunity to extraneous light sources that may cause operation of the protection is necessary. Arc detectors do not obviate requirements for discrimination.

2.5.6 Coordination of overload and short-circuit protective devices

2.5.6.1 *Protection afforded by one device*

An overload protective device that complies with Clause 2.5.3 and has a breaking capacity not less than the value of the prospective short-circuit current at its point of installation may be deemed to protect the conductor on the load side of that point against short-circuit currents and overload currents.

NOTE: This consideration may not be valid for short-circuit currents lower than the prospective value, or for certain types of circuit-breakers, especially non-current-limiting types. Its validity should be checked, in accordance with the requirements of Clause 2.5.4.2.

* **2.5.6.2** *Protection afforded by separate devices*

The requirements of Clauses 2.5.3 and 2.5.4 apply respectively to the overload protective device and to the short-circuit protective device.

The characteristics of the devices shall be coordinated so that the energy let through by the short-circuit protective device does not exceed that which can be withstood without damage by the overload protective device in accordance with Clause 2.5.4.5(a).

COPYRIGHT

Copyright Standards New Zealand

auto login of Electrical Workers Licensing Group is licenced to temporarily download this document.
Electrical Workers Licensing Group may print this document but not more than 10% of the documents subscribed to may be held in printed form at any one time.

The selection of protective devices shall be verified by inspection [see Clause 8.2.2(c)(ii)].

2.5.7 Reliability of supply

2.5.7.1 *General*

The electrical installation shall be designed to provide a reliable supply by dividing the electrical installation into appropriate circuits and selecting protective devices with appropriate discrimination (selectivity) so that in the event of a fault occurring, the loss of supply resulting from operation of a protective device is minimized.

The selection and setting of protective devices shall be verified by inspection [see Clause 8.2.2(c)(ii)].

2.5.7.2 *Coordination of protective devices*

* **2.5.7.2.1** *General*

Coordination of protective devices requires consideration of both discrimination (selectivity) and backup (cascading) protection.

Discrimination (selectivity) between protective devices depends on the operating characteristics of two or more protective devices such that the protective device for the downstream circuit shall operate for a given fault current while the protective device(s) for the upstream circuit shall not operate.

Backup (cascading) depends on the characteristics of each of the two devices as well as the behaviour of the two devices when operating in series. This includes the energy let through when sharing the fault as well as the peak current withstand of the downstream device.

NOTE: Manufacturer's instructions/data should be used where available.

Figure 2.12 provides a generic overview of discrimination (selectivity) between protective devices.

auto login of Electrical Workers Licensing Group is licenced to temporarily download this document.
Electrical Workers Licensing Group may print this document but not more than 10% of the documents subscribed to may be held in printed form at any one time.

Copyright Standards New Zealand

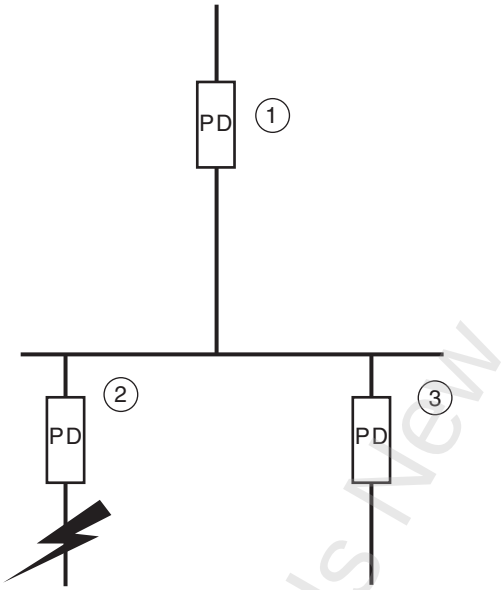

NOTES:

1 Discrimination (selectivity) is achieved when PD 1 remains intact while PD 2 clears a fault on the load side. Thus supply is maintained to PD 3 and the remainder of the electrical installation.

2 For examples and detailed requirements of compliant time-current curves, see Figures 2.13 to 2.18.

3 Discrimination (selectivity) need not apply where protective devices are in series on the same circuits such as in UPS connected supplies.

FIGURE 2.12 DISCRIMINATION/SELECTIVITY BETWEEN PROTECTIVE DEVICES—GENERAL

* **2.5.7.2.2** *Safety service circuit discrimination (selectivity)*

A fault current up to the level of an arcing fault current—

(a) on one safety service circuit shall not result in loss of supply to other safety service circuits; and

(b) on the general electrical installation shall not result in loss of supply to safety services.

Discrimination (selectivity) shall be provided between protective devices up to the level of an arcing fault current, which is deemed to be in the range of 30% to 60% of the prospective short-circuit current in accordance with Clause 7.2.3.5.

NOTE: An example of protective devices and the arcing fault current is shown in Figure 2.13.

* **2.5.7.2.3** *General supply circuit discrimination (selectivity)*

In accordance with Clause 2.5.7.1, to minimize loss of supply, discrimination (selectivity) shall be arranged between protective devices for outgoing circuits and the upstream protective device.

COPYRIGHT

Copyright Standards New Zealand

auto login of Electrical Workers Licensing Group is licenced to temporarily download this document.
Electrical Workers Licensing Group may print this document but not more than 10% of the documents subscribed to may be held in printed form at any one time.

Discrimination is achieved using a discrimination study, the ratios shown below or manufacturer's data and tables. Circuit-breakers with curves shown in AS/NZS IEC 60947.2:2015 Figure K.1, current limiting and reflex tripping circuit-breakers may require special consideration.

Discrimination need not apply above the arcing fault current I_{arc} which is deemed to be in the range of 30% to 60% of the prospective short-circuit current.

Discrimination need not apply where protective devices are in series on the same circuit such as in UPS connected supplies.

Refer to Figure 2.13.

Downstream devices shall be selected to discriminate (provide selectivity) with upstream devices, using time-current curves, in accordance with the following:

(a) *Circuit-breakers* Two circuit-breakers, connected such that C_2 is the downstream device and C_1 the upstream device, shall be selected:

(i) For ratings of C_2 greater than or equal to 800 A, discrimination shall be provided by a coordination study using manufacturer's data.

NOTE: Curve references are found in AS/NZS IEC 60947.2:2015, Figure K.1.

Allowance for tolerances on settings may be required. Refer to Figure 2.14.

A1

(ii) For ratings of C_2 greater than or equal to 250 A, and less than 800 A, discrimination shall be provided between overload curves.

Discrimination is deemed to be achieved if the overload setting of $C_1 \geq 1.5 \times C_2$, e.g. C_1 1000 A with C_2 630 A.

Refer to Figure 2.15.

(iii) For ratings of C_2 less than 250 A, discrimination is deemed to be achieved if $C_1 \geq 1.5 \times C_2$, e.g. C_1 MCB marked C63 with MCB C_2 marked C40 (i.e. both C curves).

A1

Refer to Figure 2.16.

Exception: For ratings of $C_2 \leq 80$ A discrimination is not required.

NOTES:

1 I_{SD} is not available on MCBs and only available on some MCCBs with electronic trip units.

2 Where a circuit-breaker is installed for load limiting purposes, such as on submains, reliability of supply is not required.

(b) *Fuses* Two fuses connected such that F_2 is the downstream device and F_1 the upstream device shall be selected such that the characteristics of the devices provide discrimination (selectivity) on overload (see Figure 2.17).

COPYRIGHT

Copyright Standards New Zealand

Electrical Workers Licensing Group may print this document but not more than 10% of the documents subscribed to may be held in printed form at any one time.
auto login of Electrical Workers Licensing Group is licenced to temporarily download this document.

Discrimination (selectivity) between HRC fuses is deemed to be achieved—

(i) For overload when $F_1 \geq 1.6 \times F_2$, e.g. 16 A with 10 A; and

(ii) For short-circuit when $F_1 \geq 2 \times F_2$, e.g. 20 A with 10 A.

NOTE: Overload curves are those for times >0.01 s. Short-circuit data is based on the total I^2t of $F_2 \leq$ pre-arcing I^2t of F_1.

(c) *Fuse and circuit-breaker* A fuse and a circuit-breaker connected such that C_2 is the downstream device and F_1 the upstream device shall be selected such that the characteristics of the devices provide discrimination (selectivity) between the overload curve and the instantaneous setting or short delay setting (I_{SD}) of C_2 and the time-current curve of F_1.

Back up fuses are not required to discriminate.

For service fuses refer Note 5.

NOTES:

1 A coordination study requires the calculation of the prospective short-circuit currents, and comparison of the operating time of various protective devices, taking into consideration the actual current seen by each protective device. Manufacturer's data should be used to assess coordination (discrimination and back up) in the short-circuit area (above the short delay or Instantaneous setting of the protective devices).

2 Detailed requirements for coordination (selectivity and back up) as well as symbols, figures and examples are given in relevant Standards as follows: MCCBs and ACBs—AS/NZS IEC 60947.2, MCBs—AS/NZS 60898.

3 If devices are to be installed above their rated short-circuit capacity, the backup protection (cascading) requirements for circuit-breaker or fuse selection needs to be determined from manufacturer's data. Discrimination (selectivity), when backup protection of a circuit-breaker is applied, is limited (partial) and the value needs to be obtained from the manufacturer.

4 Refer to Clause 2.5.5 for other requirements for ≥800 A main switchboards.

5 The electricity distributor should be consulted for discrimination requirements between installation protective devices and the electricity distributor's service protective devices. The curves and settings of service protective devices will be required. For example, a 100 A service fuse will discriminate with a 32 A MCB.

6 Discrimination requirements are not retrospective.

7 The following terms are used in Figures 2.13 to 2.18:

I_{PSC} = prospective short-circuit current (see Clause 1.4.43)

I_{arc} = deemed maximum arcing fault current (= 60% I_{PSC})

I_i = instantaneous setting

I_{SD} = short delay setting

0.01 s = the limit of fuse time-current.

COPYRIGHT

Electrical Workers Licensing Group is licenced to temporarily download this document.
auto login of Electrical Workers Licensing Group may print this document but not more than 10% of the documents subscribed to may be held in printed form at any one time.

Copyright Standards NSW

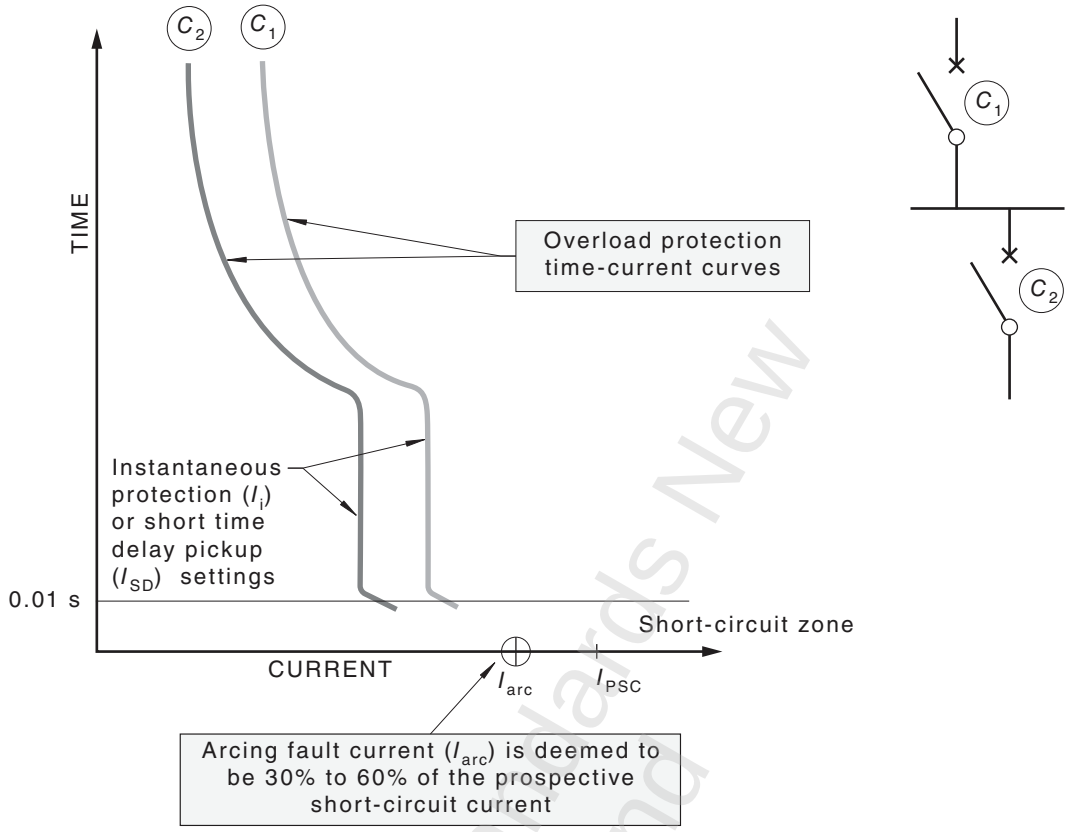

FIGURE 2.13 CIRCUIT-BREAKER CURVES—GENERAL EXPLANATION, SETTINGS AND ZONES

Copyright Standards New Zealand

auto login of Electrical Workers Licensing Group is licenced to temporarily download this document.
Electrical Workers Licensing Group may print this document but not more than 10% of the documents subscribed to may be held in printed form at any one time.

auto login of Electrical Workers Licensing Group is licenced to temporarily download this document.
Electrical Workers Licensing Group may print this document but not more than 10% of the documents subscribed to may be held in printed form at any one time.

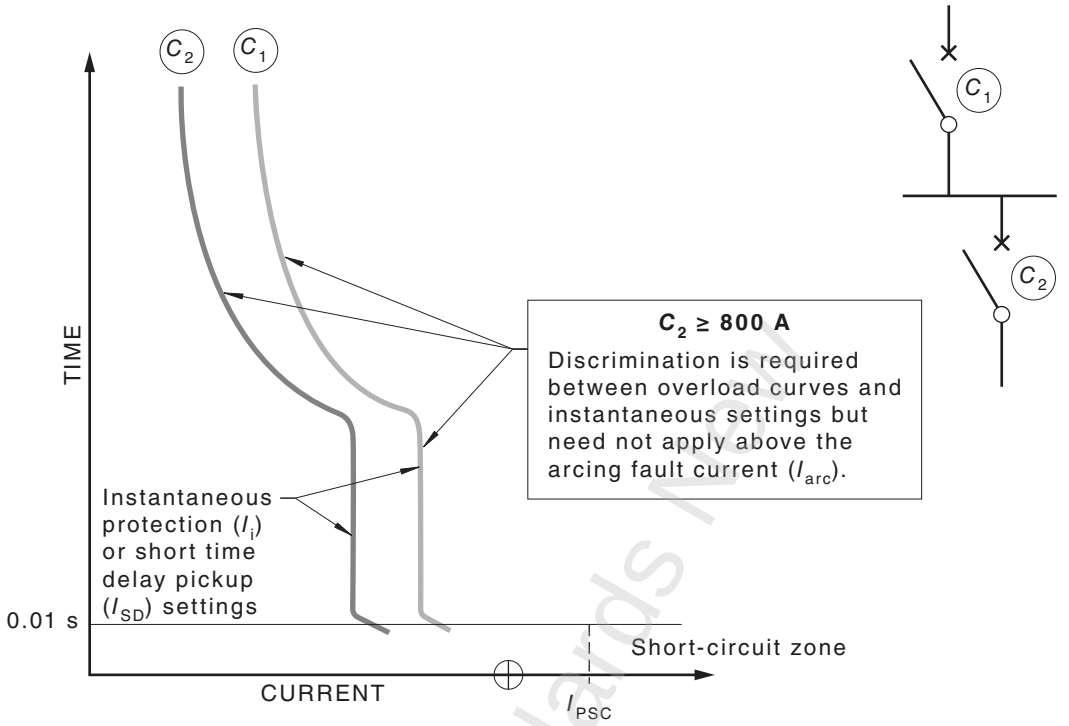

FIGURE 2.14 CIRCUIT-BREAKER CURVES WITH DISCRIMINATION REQUIREMENTS BETWEEN CIRCUIT-BREAKERS RATED GREATER THAN OR EQUAL TO 800 A

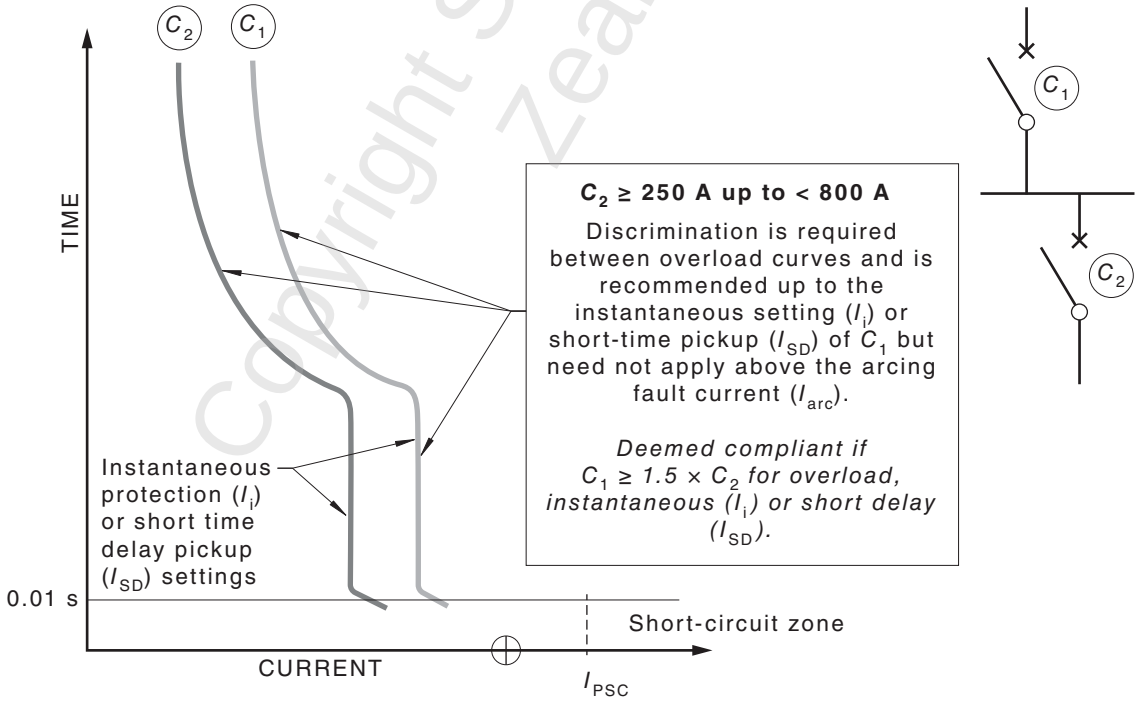

FIGURE 2.15 CIRCUIT-BREAKER CURVES WITH DISCRIMINATION REQUIREMENTS BETWEEN CIRCUIT-BREAKERS RATED GREATER THAN OR EQUAL TO 250 A AND UP TO 800 A

COPYRIGHT

A1

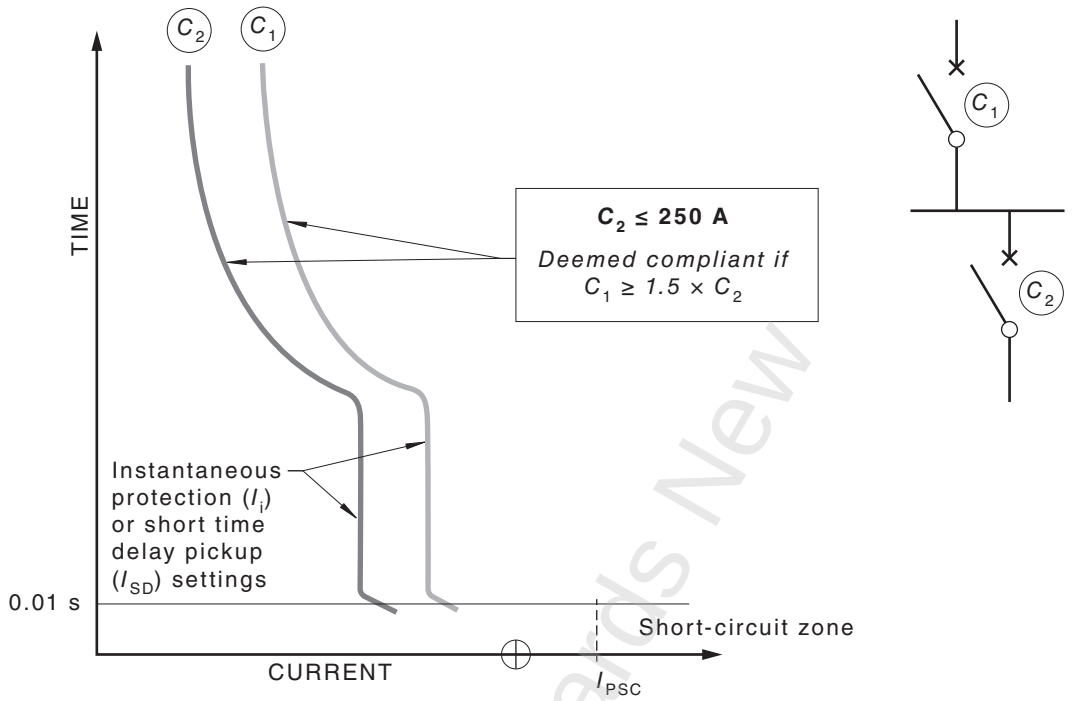

NOTE: See Clause 2.5.7.2.3(a)(iii) for exception.

FIGURE 2.16 CIRCUIT-BREAKER CURVES WITH DISCRIMINATION REQUIREMENTS BETWEEN CIRCUIT-BREAKERS RATED LESS THAN 250 A

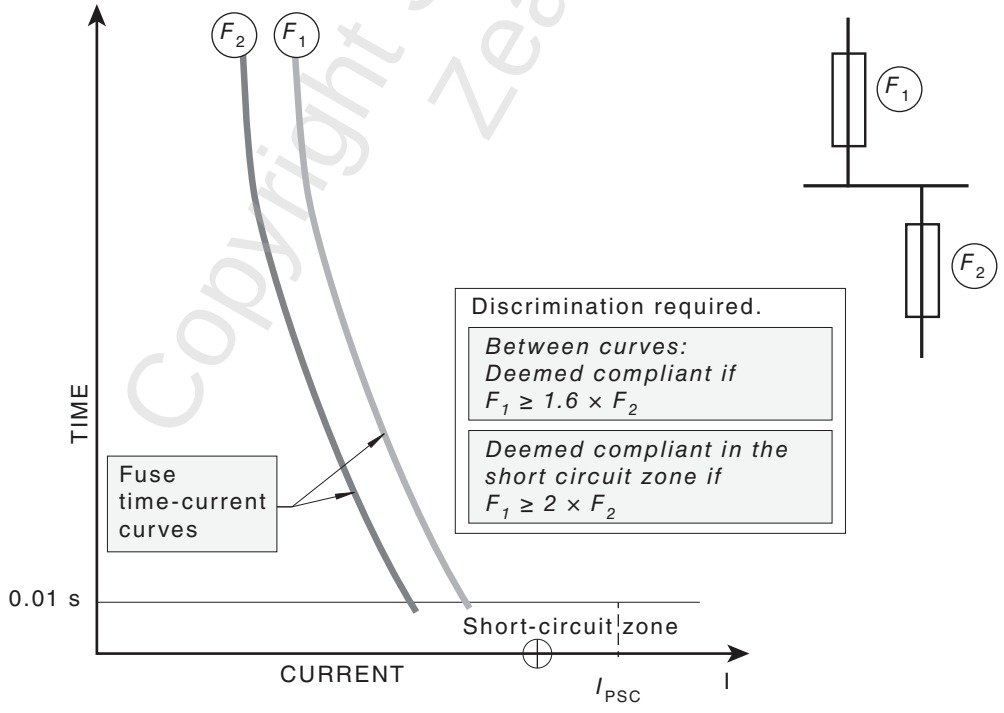

FIGURE 2.17 FUSE CURVES WITH DISCRIMINATION REQUIREMENTS

COPYRIGHT

Copyright Standards New Zealand

auto login of Electrical Workers Licensing Group is licenced to temporarily download this document.
Electrical Workers Licensing Group may print this document but not more than 10% of the documents subscribed to may be held in printed form at any one time.

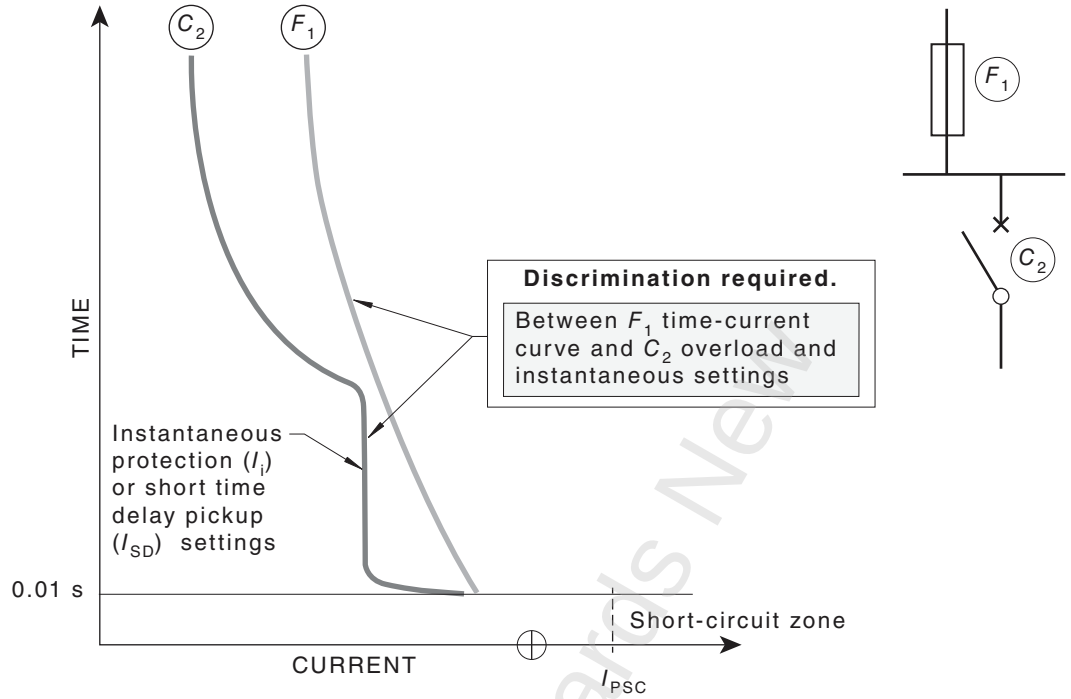

FIGURE 2.18 FUSE AND CIRCUIT-BREAKER CURVES
WITH DISCRIMINATION REQUIREMENTS

2.6 ADDITIONAL PROTECTION BY RESIDUAL CURRENT DEVICES

2.6.1 General

The use of fixed setting RCDs with a rated operating residual current not exceeding 30 mA is recognized as providing additional protection in areas where excessive earth leakage current in the event of failure of other measures of protection or carelessness by users could present a significant risk of electric shock.

NOTE: The use of RCDs is intended only to augment other measures of basic protection.

RCDs do not provide protection against faults between live conductors, nor do they provide protection against voltages imported into the electrical installation earthing system through the supply system neutral conductor.

The use of such devices is not recognized as a sole means of protection and does not obviate the need to apply the protective measures specified in Clause 2.4.

Additional protection shall be provided, where required by Clause 2.6.3, to automatically disconnect the supply when an earth leakage current reaches a predetermined value.

NOTES:

1 The requirements in these rules are for RCDs with a maximum sensitivity of 30 mA (can be either 10 mA or 30 mA).

COPYRIGHT

Copyright Standards New Zealand

auto login of Electrical Workers Licensing Group is licenced to temporarily download this document.
Electrical Workers Licensing Group may print this document but not more than 10% of the documents subscribed to may be held in printed form at any one time.

2 RCDs with a sensitivity of 30 mA are designed to operate before fibrillation of the heart occurs.

3 RCDs with a sensitivity of 10 mA are designed to operate before muscular contraction, or inability to let go occurs. Muscular contraction can result in inability to breathe. Infants may be more prone to this risk.

2.6.2 Selection and arrangement of devices

2.6.2.1 *General*

Any device for the provision of additional protection shall be capable of interrupting the part of the circuit protected by the device when an earth leakage current is above a predetermined value.

The load current rating of an RCD shall be not less than the greater of the following:

(a) The maximum demand of the portion of the electrical installation being protected by the device.

or

(b) The highest current rating of any overload protective device on the portion of the electrical installation being protected.

No earthing or protective bonding conductor shall pass through the magnetic circuit of an RCD.

RCDs shall be so selected, and the electrical circuits so subdivided, that any earth leakage current that may be expected to occur during normal operation of the connected load or loads will be unlikely to cause unnecessary tripping of the device.

NOTES:

1 To avoid unwanted tripping because of leakage currents and transient disturbances, care should be taken to ensure that the sum of the leakage currents of electrical equipment on the load side of an RCD is significantly less than its rated residual current. RCDs may operate at any value of residual current in excess of 50% of the rated residual current.

The loading of the circuit should be such that the leakage current does not exceed one-third of the rated residual current.

2 To avoid excessive leakage current causing unwanted tripping where socket-outlets are protected by one RCD having a rated residual current not greater than 30 mA, consideration should be given to the number of socket-outlets protected and the nature of electrical equipment likely to be connected to the socket-outlets.

2.6.2.2 *Types of RCD*

2.6.2.2.1 *General*

* RCDs shall be fixed setting RCDs complying with AS/NZS 3190, AS/NZS 61008.1, AS/NZS 61009.1, or IEC 62423 and intended for use in electrical installations.

COPYRIGHT

Copyright Standards New Zealand

auto login of Electrical Workers Licensing Group is licenced to temporarily download this document.
Electrical Workers Licensing Group may print this document but not more than 10% of the documents subscribed to may be held in printed form at any one time.

A2 With the increased adoption of electronics, renewables and emerging technologies by end users, there is a greater impact due to d.c. waveforms on the a.c. supply. It is recommended that Type A RCDs are used as the general type for installations.

NOTES:

The following Notes apply to both Australia and New Zealand:

1 Common types of RCDs and their applications are described as follows:

A2 (a) Type AC RCD (marked with the  symbol), for which tripping is ensured for residual sinusoidal alternating currents.

(b) Type A RCD (marked with the  symbol), for which tripping is ensured—

(i) as for Type AC; and

(ii) for residual pulsating direct currents.

A1 (c) Type I RCD, for which tripping is ensured—

(i) as for Type A; and

(ii) with rated residual alternating current not exceeding 10 mA with an interrupting time not exceeding 40 ms at rated residual current.

RCDs with rated residual currents not exceeding 10 mA but with an interrupting time exceeding 40 ms but not exceeding 300 ms at rated residual current are treated as Type A devices and marked ‘General Type, Not for Patient Areas’ in accordance with AS/NZS 3190, AS/NZS 61008.1 and AS/NZS 61009.1.

(d) Type F RCD, (F signifying frequency; marked with the symbols shown on right), for which tripping is ensured—  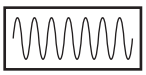

(i) as for Type A;

(ii) for composite residual currents, whether suddenly applied or slowly rising intended for circuit supplied between phase and neutral or phase and earthed middle conductor; and

(iii) for residual pulsating direct currents superimposed on smooth direct current.

Type F RCDs are intended for the protection of circuits carrying high frequency leakage currents such as those associated with frequency converters and electronic ballasts.

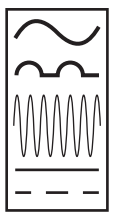

(e) Type B RCD (marked with the symbol), for which tripping is ensured—

(i) as for Type A;

(ii) for residual sinusoidal alternating currents up to 1000 Hz;

COPYRIGHT

Copyright Standards New Zealand

auto login of Electrical Workers Licensing Group is licenced to temporarily download this document.
Electrical Workers Licensing Group may print this document but not more than 10% of the documents subscribed to may be held in printed form at any one time.

(iii) for residual alternating currents or pulsating direct currents superimposed on a smooth direct current of 0.4 times the rated residual current (I_{dn}); and

(iv) for residual direct currents that may result from rectifying circuits.

(f) Type S RCD (S signifying selectivity and marked with the S symbol), a specially designed RCD for which tripping is ensured after a predetermined operating time delay corresponding to a given value of residual current.

2 The waveform of a fault current to earth can affect the operation of an RCD and should be taken into account for the selection of the type of RCD. Users should consult the RCD manufacturer for correct selection. IEC 60755 Annex B contains a useful diagram of the likely form of the fault currents generated from circuits utilizing a variety of semiconductor devices and the selection of appropriate RCD types.

2.6.2.2.2 *Australia only* A

In Australia, the following provisions apply:

A2 RCDs may have any number of poles. As a minimum, RCDs shall interrupt all active conductors.

NOTE:Other Standards may require the interruption of all live (active and neutral) conductors.

RCDs located beside a socket-outlet or incorporated into a socket-outlet (SRCDs) shall interrupt all live (active and neutral) conductors.

RCDs shall be of the type for which tripping is ensured —

(a) for residual sinusoidal alternating current; or

(b) for residual sinusoidal alternating current and residual pulsating direct current.

For 24 months from the date of publication of Amendment No. 2, either Item (a) or (b) may apply. Following that time, Type AC RCDs as described in Item (a) shall not be installed.

2.6.2.2.3 *New Zealand only* NZ

In New Zealand, RCDs required by this Standard shall—

(a) interrupt all live (active and neutral) conductors; and

A1 (b) be of a Type that provides protection against electric shock that complies with the requirements of a Type A RCD in accordance with AS/NZS 61008.1 or AS/NZS 61009.1.

2.6.2.3 *Protection against initiation of fire*

Although it is not a requirement of this Standard to provide additional protection against the initiation of fire caused by current leakage across insulation, a Type S RCD with a rated residual current in the range 100 mA to 300 mA may be used as a main switch in a domestic electrical installation, in addition to the requirements of Clause 2.6.3.

COPYRIGHT

Copyright Standards New Zealand

auto login of Electrical Workers Licensing Group is licenced to temporarily download this document.
Electrical Workers Licensing Group may print this document but not more than 10% of the documents subscribed to may be held in printed form at any one time.

NOTE: Protection is not afforded to separated circuits typically used for extra-low voltage (ELV) lighting or against the initiation of fire from equipment operating at elevated temperatures.

2.6.2.4 *Arrangement*

Where additional protection of final subcircuits is required, in accordance with Clause 2.6.3, the final subcircuits shall be arranged as follows:

(a) In all electrical installations where—

(i) the number of RCDs installed exceeds one; and

(ii) more than one lighting circuit is installed,

lighting circuits shall be distributed between RCDs.

(b) In residential installations—

(i) not more than three final subcircuits shall be protected by any one RCD; and

(ii) where there is more than one final subcircuit,

a minimum of two RCDs shall be installed.

NOTE: These arrangements are intended to minimize the impact of the operation of a single RCD.

2.6.3 Additional protection by residual current devices

* **2.6.3.1** *General*

The requirements of this Clause for the installation of RCDs are in addition to the RCD requirements for electrical installations as specified in—

(a) other Australian and New Zealand Standards, e.g. AS/NZS 3001, AS/NZS 3002, AS/NZS 3003, AS/NZS 3004 series and AS/NZS 3012;

(b) other Sections of this Standard, e.g.—

(i) Section 3 for protection against mechanical damage;

(ii) Section 6 for baths, showers and other water containers; and

(iii) Section 7 for special electrical installations; and

(c) the requirements and regulations of legislation, such as work health and safety legislation.

NOTE: In New Zealand, attention is drawn to the requirements of NZECP 55 for wiring and fittings located near conductive thermal insulation. **NZ**

* **2.6.3.2** *Installation requirements—Australia only* **A**

2.6.3.2.1 *General*

RCD installation requirements, for Australia only, shall comply with Clauses 2.6.3.2.2 to 2.6.3.2.6.

Exceptions: These requirements need not apply to the following:

1 Final subcircuits supplied at ELV in accordance with Clause 7.5.

COPYRIGHT

Copyright Standards New Zealand

auto login of Electrical Workers Licensing Group is licenced to temporarily download this document.
Electrical Workers Licensing Group may print this document but not more than 10% of the documents subscribed to may be held in printed form at any one time.

2 Final subcircuits supplied from a separated supply in accordance with Clause 7.4.

* **2.6.3.2.2** *Domestic and residential installations—Australia only* **A**

Additional protection by RCDs with a maximum rated residual current of 30 mA shall be provided for all final subcircuits in domestic and residential electrical installations.

Where protection of final subcircuits is required, RCDs shall be installed at the switchboard at which the final subcircuit originates.

These installations include but are not limited to—

A1 (a) individual domestic electrical installations; or

(b) residential areas of electrical installations; or

(c) common areas of multiple residential electrical installations; or

NOTE: Common areas are those that are available for use by all residents, or groups of residents and their invitees.

A2 *Exception: Final subcircuits of multiple residential installations may instead comply with Clause 2.6.3.2.3 if they supply only equipment not located within or supplied from any residential living unit, e.g. lifts, central air conditioning plant, fire systems, drainage pumps.*

(d) external lighting installations in common areas of multiple residential electrical installations.

Exception: RCD protection need not apply to repairs undertaken in accordance with Clause 2.6.3.2.6.

* **2.6.3.2.3** *Non-domestic and non-residential installations—Australia only* **A**

2.6.3.2.3.1 *Types of installations*

These installations include, but are not limited to—

A1 (a) individual commercial or industrial electrical installations; or

(b) multiple commercial or industrial electrical installations that are provided for common use; or

(c) external lighting installations in common areas of multiple commercial or industrial electrical installations; or

(d) commercial or industrial portions of mixed installations.

2.6.3.2.3.2 *Location of RCD protection*

Where protection of final subcircuits is required, RCDs shall be installed at the switchboard at which the final subcircuit originates.

A1 *Exception: Where the wiring system is installed with additional mechanical protection against mechanical damage, complying with the requirements of Clause 3.9.4.4(a) or Clause 3.9.4.4(b), the RCD protection specifically intended for the protection of that socket-outlet or direct connected*

Electrical Workers Licensing Group is licenced to temporarily download this document.
auto login of Electrical Workers Licensing Group may print this document but not more than 10% of the documents subscribed to may be held in printed form at any one time.

Copyright Standards New Zealand

A1 *electrical equipment can be installed at, or adjacent to the socket-outlet or direct connected electrical equipment (e.g. factory).*

2.6.3.2.3.3 *Requirements for additional protection*

Additional protection by RCDs with a maximum rated residual current of 30 mA shall be provided for final subcircuits with a rating not exceeding 32 A supplying—

A1 (a) socket-outlets; or

(b) lighting; or

(c) direct connected hand-held electrical equipment, e.g. directly connected tools; or

(d) direct connected electrical equipment that represents an increased risk of electric shock.

Factors that may represent an increased risk of electric shock include but are not limited to—

(i) external influences (refer Clause 1.5.14); and

(ii) type of electrical installation and processes being conducted (e.g. workshops and particular industrial activities).

NOTE: For all other final subcircuits with a rating not exceeding 32 A for direct connected equipment, additional protection by RCDs with a maximum rated residual current of 30 mA should be considered.

Exceptions: These requirements need not apply to the following:

1 Repairs in accordance with Clause 2.6.3.2.6.

2 Situations where the disconnection of a circuit by an RCD could cause a danger greater than earth leakage current (e.g. traffic signals).

3 Final subcircuits installed for the connection of specific items of equipment, provided that the connected equipment is designed, constructed and installed in such a manner that is not likely to present a significant risk of electric shock and—

(i) is required by the owner or operator to perform a function that is essential to the performance of the installation and that function would be adversely affected by a loss of supply caused by the RCD operation; or

(ii) may cause spurious nuisance tripping through high leakage current being generated in the normal operation of the equipment (e.g. VSDs).

In addition where the specific item of equipment is connected by a plug and socket-outlet, that socket-outlet is—

— located in a position that is not likely to be accessed for general use; and

COPYRIGHT

Copyright Standards New Zealand

auto login of Electrical Workers Licensing Group is licenced to temporarily download this document.
Electrical Workers Licensing Group may print this document but not more than 10% of the documents subscribed to may be held in printed form at any one time.

— *clearly marked to indicate the restricted use of that socket-outlet and that RCD protection is not provided for that socket-outlet.*

4 Where other methods of protection are applied, e.g. a separated supply in accordance with Clause 7.4.

* **2.6.3.2.4** *Home care installations—Australia only* **A**

RCD requirements for medical electrical equipment in home care medical installations shall comply with AS/NZS 3003.

* NOTES:

1 Some of these installations require a Type I RCD, with a maximum rated residual current of 10 mA.

2 See Appendix M for further information on continuity of supply.

* **2.6.3.2.5** *Alterations to installations and replacement of switchboards—Australia only* **A**

Additional protection by RCDs shall be provided in existing electrical installations where alterations or a switchboard replacement is completed.

The following provisions shall apply:

A1 A2

(a) *Alterations* For alterations to existing installations, RCD protection shall be provided as required by Clauses 2.6.3.2.2, 2.6.3.2.3 or 2.6.3.2.4 as applicable to the type of installation.

For existing domestic and residential installations, RCDs installed for the protection of additional socket-outlets, electrical equipment or lighting points shall be installed at the origin of the final subcircuit.

NOTE: For the purposes of this Clause, combination fan, light and heater units, smoke alarms, exhaust and ceiling sweep fans are all regarded as electrical equipment.

(b) *Switchboard replacement* Where all of the circuit protection on a switchboard is replaced, additional protection by RCDs as required by this Clause (2.6) shall be provided for the final subcircuits supplied from that switchboard.

* **2.6.3.2.6** *Repairs—Australia only* **A**

A1 A2

The requirements of this Clause (2.6.3) for RCD protection need not apply to the following applications that are deemed to be repairs to an existing installation:

(a) Where a socket-outlet, luminaire or single item of electrical equipment that is not RCD protected is replaced with an equivalent item in the same location.

or

(b) Where a single socket-outlet is replaced with a multiple socket-outlet assembly.

or

COPYRIGHT

Copyright Standards New Zealand

auto login of Electrical Workers Licensing Group is licenced to temporarily download this document.
Electrical Workers Licensing Group may print this document but not more than 10% of the documents subscribed to may be held in printed form at any one time.

A1 A2 (c) Where an unswitched socket-outlet is installed—

(i) in a roof space or at a height of more than 3 m above the ground, floor or platform; and

(ii) at an existing lighting point specifically for the connection of a replacement luminaire or lighting point.

NOTE: For the purposes of this Clause, combination fan, light and heater units, smoke alarms, exhaust and ceiling sweep fans are all regarded as lighting points.

* **2.6.3.3** *Installation requirements—New Zealand only* **NZ**

* **2.6.3.3.1** *Residential installations—New Zealand only*

Additional protection by RCDs with a maximum rated residual current of 30 mA shall be provided for final subcircuits supplying—

(a) one or more socket-outlets; or

(b) one or more lighting points; or

A1 A2 NOTE: For the purposes of this Clause, combination fan, light and heater units, smoke alarms, exhaust and ceiling sweep fans are all regarded as lighting points.

(c) directly connected hand-held electrical equipment, e.g. directly connected hair dryers or tools forming part of—

A1 (i) individual domestic electrical installations; or

(ii) residential areas of other electrical installations (see Note below); or

(iii) multiple residential electrical installations that are provided for common use; or

(iv) external lighting installations in common areas of multiple residential electrical installations.

Where protection of final subcircuits is required, RCDs shall be installed at the switchboard at which the final subcircuit originates.

Exceptions:

1 This requirement need not apply to a final subcircuit for which a method of fault protection other than automatic disconnection of supply is applied, e.g. a separated supply in accordance with Clause 7.4 or supply at extra low voltage in accordance with Clause 7.5.

2 This requirement need not apply to a final subcircuit supplying a socket-outlet or a connecting device specifically for the connection of a fixed or stationary electric cooking appliance, such as a range, oven or hotplate unit provided that—

(a) the socket-outlet is located in a position that is not likely to be accessed for general purposes;

COPYRIGHT

Copyright Standards New Zealand

auto login of Electrical Workers Licensing Group is licenced to temporarily download this document.
Electrical Workers Licensing Group may print this document but not more than 10% of the documents subscribed to may be held in printed form at any one time.

(b) the socket-outlet is clearly marked to indicate the restricted purpose of the socket-outlet.

NOTES:

A1 1 '**Text deleted**'

2 This requirement applies to complete final subcircuits, not to additions or alterations of existing final subcircuits. Requirements for additions and alterations are in Clause 2.6.3.3.4.

* **2.6.3.3.2** *Non-residential installations—New Zealand only* **NZ**

In New Zealand, the following requirements apply to non-residential locations:

(a) *Education and childcare facilities*

Additional protection by an RCD with a maximum rated residual current of 30 mA shall be provided for final subcircuits supplying one or more socket-outlets having a rating not exceeding 30 A in—

A1 (i) kindergartens; and

(ii) day care centres for preschool children; and

(iii) schools for children up to and including school Year 13; and

(iv) areas in tertiary education or vocational training facilities that are primarily used or intended for teaching or training.

(b) *Junior education and childcare facilities*

Additional protection by an RCD with a maximum rated residual current of 10 mA shall be provided for socket-outlets in areas within a building primarily for the purpose of teaching or caring for children in—

A1 (i) kindergartens; and

(ii) day-care centres for preschool children; and

(iii) schools for children up to and including school year eight.

NOTE: These RCDs need not be Type I as used for electrical medical devices.

(c) *Other locations*

Socket-outlets with a rating not exceeding 30 A, and supplies to directly connected hand-held equipment, installed in the following locations, shall be protected by RCDs with a maximum rated residual current of 30 mA:

(i) Outdoor locations.

(ii) Locations that have easy or unsupervised public access.

NOTE: Typical examples include public areas of train stations, airports and shopping malls.

(iii) Amusement arcades.

auto login of Electrical Workers Licensing Group is licenced to temporarily download this document.
Electrical Workers Licensing Group may print this document but not more than 10% of the documents subscribed to may be held in printed form at any one time.

Copyright Standards New Zealand

(iv) Sockets in damp situation zones as classified by Clauses 6.6 or 6.7.

(d) *Particular types of equipment*

Socket-outlets for and supplies to the following types of equipment shall be protected by RCDs with a maximum rated residual current of 30 mA:

(i) Children's rides.

(ii) Vending machines.

Exceptions:

1 The requirements of Items (a), (b), (c) and (d) need not apply to the following:

- *Where other methods of fault protection other than automatic disconnection of supply are applied, e.g. a separated supply in accordance with Clause 7.4 or supply at extra low voltage in accordance with Clause 7.5.*
- *Where the disconnection of a circuit by an RCD could cause a danger greater than earth leakage current.*
- *Where socket-outlets that are part of a mining operation are supplied at reduced low voltage.*

2 The requirement of Item (b) for additional protection by 10 mA RCDs need not apply to the following:

- *Socket-outlets mounted above 1.8 m from the floor or above 1.8 m from a platform that is accessible to children.*
- *Socket-outlets specifically for the supply of electricity to information technology equipment or cleaning equipment that are clearly marked to indicate the restricted purpose of the socket-outlet and that 10 mA RCD protection is not provided.*
- *Socket-outlets in corridors, halls, gymnasiums and similar areas where portable appliances are not likely to be used by children.*
- *Areas occasionally used by children up to school year eight but primarily intended for the care or education of older age groups.*
- *A socket-outlet or a connecting device specifically for the connection of a fixed or stationary appliance for cooking, such as a range, oven or hotplate unit provided that—*

A1

— *the socket-outlet is located in a position that is not likely to be accessed for general purposes; and*

— *the socket-outlet is clearly marked to indicate the restricted purpose of the socket-outlet; and*

Electrical Workers Licensing Group is licenced to temporarily download this document.
auto login of Electrical Workers Licensing Group may print this document but not more than 10% of the documents subscribed to may be held in printed form at any one time.

Copyright Standards New Zealand

— *the socket is supplied by a dedicated circuit protected by a 30 mA RCD.*

NOTES:

1 Childcare facilities include any premises registered with local authorities as a day-care centre and or registered or licensed family day-care premises.

2 Where one clause requires 30 mA RCD protection of the final subcircuit, and this Clause requires 10 mA RCD protection of the socket-outlet; 30 mA RCD at the switchboard and a 10 mA RCD in the same room as, or incorporated into, the socket-outlet(s) would satisfy both these requirements.

3 Care should be taken to avoid nuisance tripping by limiting the number of socket-outlets protected by the same 10 mA RCD.

4 'Reduced low voltage' means either (a) or (b):

(a) A single-phase system in which—

(i) the nominal line-to-line voltage does not exceed 110 V a.c.; and

(ii) the nominal line-to-earth voltage does not exceed 55 V a.c.; and

(iii) all exposed conductive parts are connected to the protective earthing conductor.

(b) A three-phase system in which—

(i) the nominal line-to-line voltage does not exceed 110 V a.c.; and

(ii) the nominal line-to-earth voltage does not exceed 63.5 V a.c.; and

(iii) all exposed conductive parts are connected to the protective earthing conductor.

* **2.6.3.3.3** *Home care installations—New Zealand only* **NZ**

The installation of medical electrical equipment in home care medical installations shall comply with AS/NZS 3003.

NOTES:

1 Some of these installations require a Type I RCD, with a maximum rated residual current of 10 mA and faster tripping time.

2 Further information on reliability of supply is provided in Appendix M.

2.6.3.3.4 *Additions and alterations—New Zealand only* **NZ**

The following requirements apply:

(a) *General* Where all of the circuit protection on a switchboard is replaced, additional protection by RCDs as required by this Clause (Clause 2.6.3) shall be provided for the final subcircuits supplied from that switchboard.

(b) *Socket-outlets* Socket-outlets added to an existing circuit shall be protected by an RCD in accordance with the requirements for new subcircuits in the part of the installation in which the sockets are located.

Copyright Standards New Zealand

auto login of Electrical Workers Licensing Group is licenced to temporarily download this document.
Electrical Workers Licensing Group may print this document but not more than 10% of the documents subscribed to may be held in printed form at any one time.

* NOTE: Where socket-outlets are added to an existing final subcircuit and RCD protection of the subcircuit is required, installing the RCD at the origin of the subcircuit is preferred; however, the RCD protection need only be fitted at the commencement of the additional wiring. The location of all such RCDs should be recorded at the switchboard from which the final subcircuit originates.

Exceptions: These requirements need not apply to the following:

1 Where socket-outlets that are not RCD-protected are replaced, including the replacement of a single socket-outlet with a multiple socket-outlet assembly.

2 Where socket-outlets are added to an existing subcircuit under circumstances where an exception from either Clause 2.6.3.3.1 or Clause 2.6.3.3.2 applies.

2.7 PROTECTION AGAINST OVERVOLTAGE

2.7.1 General

Where an electrical installation is protected against overvoltages that may cause danger to persons or property, the requirements of Clauses 2.7.2 and 2.7.3 shall apply.

NOTES:

1 The causes of overvoltage in an electrical installation include the following:
   (a) An insulation fault between the electrical installation and a circuit of higher voltage.
   (b) Switching operations.
   (c) Lightning.
   (d) Resonant phenomena.

2 Protection against overvoltages should be provided in areas where lightning is prevalent.

2.7.2 Protection by insulation or separation

Measures to prevent danger because of faults between live parts of the electrical installation and circuits supplied at higher voltages shall consist of the following:

(a) For conductors, the provision of adequate insulation screening or segregation of circuits in accordance with Clause 3.9.8.3.

(b) For transformers, the provision of adequate insulation, screening or separation of windings.

Transformer windings that operate at different voltages shall be insulated from one another by insulation with a specified test voltage or alternatively separated from one another by means of a conductive screen connected to the protective earthing conductor so as to ensure automatic disconnection of the supply in the event of a fault.

auto login of Electrical Workers Licensing Group is licenced to temporarily download this document.
Electrical Workers Licensing Group may print this document but not more than 10% of the documents subscribed to may be held in printed form at any one time.

Copyright Standards New Zealand

2.7.3 Protection by protective devices

Protective devices may be used to protect against the effects of overvoltage arising from such causes as lightning and switching operations.

Where installed, such devices shall—

A1 (a) limit the (transient) voltage to a value below the insulation level of the electrical installation or the part thereof that the device protects; and

(b) operate at voltages not less than or equal to the highest voltage likely to occur in normal operation; and

(c) cause no hazard to persons or livestock during operation.

NOTES:

1 This Standard does not require installations to be protected against overvoltages from lightning. Reference should be made to AS/NZS 1768 for information that will assist in determining the risk of lightning for particular applications and suitable protection methods.

2 This Standard does not require surge protection devices (SPDs) to be installed. Appendix F is provided to give guidance on the appropriate selection and installation method for these devices.

2.8 PROTECTION AGAINST UNDERVOLTAGE

2.8.1 General

Suitable protective measures shall be taken where—

(a) the loss and subsequent restoration of voltage; or

(b) a drop in voltage,

could cause danger to persons or property.

Exception: Where potential damage to electrical equipment is considered an acceptable risk, undervoltage protection may be omitted.

NOTES:

1 Examples where the loss and subsequent restoration of voltage might cause danger include unexpected restarting of equipment, such as a guillotine, press or electrically operated gates. See also Clause 4.13 regarding protection of motors.

2 Failure to provide sufficient voltage will significantly reduce motor torque and will result either in an excessively long starting time or, for extreme cases, in failure to start.

The requirements of Clause 2.8.2 shall apply where an electrical installation is protected against undervoltage that may cause danger to persons or property.

NOTE: The causes of undervoltage in an electrical installation may include the following:

(a) Overload, or conductors of inadequate cross-section, producing excessive voltage drop.

(b) A fault in the high voltage supply system.

COPYRIGHT

Copyright Standards New Zealand

auto login of Electrical Workers Licensing Group is licenced to temporarily download this document.
Electrical Workers Licensing Group may print this document but not more than 10% of the documents subscribed to may be held in printed form at any one time.

(c) Failure of, or high impedance in, a supply conductor.

2.8.2 Selection of protective device

The characteristics of the undervoltage protective device shall be compatible with the requirements of the appropriate Standards for starting and the use of electrical equipment.

Where the re-closure of a protective device is likely to create a dangerous situation, the re-closure shall not be automatic.

Instantaneous disconnection by the undervoltage device shall not be impaired by contacts that have intentional delays in their operation.

Exception: The operation of undervoltage protective devices may be delayed if the operation of the protected electrical equipment allows a brief interruption or loss of voltage without danger.

NOTES:

1 Protective devices having time-delay facilities should permit the starting of motors where the supply voltage exceeds 85% of rated voltage and continued operation where the voltage is within 10% of the rated voltage.

2 Examples of protective devices for undervoltage are—

(a) undervoltage relays or releases operating a switch or a circuit-breaker; and

(b) non-latched contactors.

* 2.9 PROTECTION AGAINST FIRE HAZARD DUE TO ARCING FAULTS

2.9.1 General

Protective devices, such as arc fault detection devices (AFDDs), may be used to protect against the effects of arc faults for final subcircuits, including fire hazards. Typical applications include the following:

(a) In premises with sleeping accommodation.

(b) In locations with risks of fire due to the nature of processed or stored materials (e.g. barns, wood-working shops, stores of combustible materials).

(c) In locations with combustible construction materials (e.g. wooden buildings).

(d) In fire propagating structures.

NOTE: See Appendix O for more details.

Where AFDDs are installed, the requirements of Clauses 2.9.2 to 2.9.4 apply.

NOTE: The use of AFDDs does not obviate the need to apply any other measures required by other clauses in this Standard.

* 2.9.2 Type

AFDDs shall comply with IEC 62606.

COPYRIGHT

auto login of Electrical Workers Licensing Group is licenced to temporarily download this document.
Electrical Workers Licensing Group may print this document but not more than 10% of the documents subscribed to may be held in printed form at any one time.

Copyright Standards New Zealand

* 2.9.3 Rating

AFDDs shall have a load current rating no less than that of the associated circuit protective device.

* 2.9.4 Arrangement

AFDDs shall be located at the switchboard from which the final subcircuit being protected originates.

* 2.9.5 Alterations

The installation of AFDDs should be considered when carrying out alterations to final subcircuits in situations where existing wiring systems may significantly deteriorate.

NOTES:

1 Further guidance on AFDDs is provided in Appendix O.

2 AFDDs may be used to supplement protection of aged wiring.

3 Deterioration of circuits may include damage by vermin.

2.9.6 Final subcircuits in Australia A

In Australia, this Standard does not require installation of AFDDs.

* 2.9.7 Final subcircuits in New Zealand NZ

In New Zealand, all final subcircuits having a rating not exceeding 20 A supplying the following shall be protected by an AFDD:

(a) Points in locations with the risk of fire due to the nature of processed or stored materials, e.g. barns, woodworking shops and stores of combustible materials.

(b) Points in locations containing irreplaceable items.

(c) Points in historic buildings constructed largely of flammable materials.

(d) Final subcircuits supplying socket-outlets in school dormitories.

NOTES:

1 When considering possible deterioration of circuits, circuits passing through an area should be considered as well as those supplying equipment within the area.

2 Further guidance on AFDDs is provided in Appendix O.

3 AFDDs may be used to supplement protection of aged wiring.

4 Deterioration of circuits may include damage by vermin.

2.10 SWITCHBOARDS

* 2.10.1 General

A switchboard or switchboards shall be provided in an electrical installation for the mounting or the enclosure of switchgear and protective devices.

Copyright Standards New Zealand

auto login of Electrical Workers Licensing Group is licenced to temporarily download this document.
Electrical Workers Licensing Group may print this document but not more than 10% of the documents subscribed to may be held in printed form at any one time.

Exceptions:

1 *This requirement need not apply to switchgear and protective devices installed in a ground-mounted, cable-distribution cabinet in accordance with AS/NZS 3439.5 or AS/NZS 61439.5, that protect small submains teed off larger submains forming an underground reticulated wiring system and to which unskilled persons do not require access.*

2 *Where it is necessary to connect small submains to larger submains, e.g. teeing-off large rising submains at each floor, or from large submains to a number of circuits at a switchboard, a short branch (length shall not exceed three metres) from a submain to a switchboard may be made with conductors of smaller current-carrying capacity, provided that such conductors comply with Clause 2.4.*

Alternatively, the small submains may be protected by fuses or circuit-breakers complying with Clause 2.4 of this Standard in relation to the smaller conductors and suitably mounted or fixed at the point of teeing-off. If there are more than two tee-offs per phase at any one point, the fuses or circuit-breakers shall be deemed to constitute a switchboard.

A main switchboard shall be provided for each electrical installation for the primary control and protective devices of the electrical installation including the main switch or switches.

Exception: A main switch need not be located on a switchboard, or be readily accessible, where unauthorized operation may impair safety and the electrical installation is—

(a) located on public land; and

(b) associated with telephone cabinets, traffic control signals and street furniture, such as bus shelters and the like; and

(c) otherwise controlled and protected in accordance with the requirements of this Standard.

2.10.2 Location of switchboards

2.10.2.1 *General*

Switchboards shall be—

A1 **(a) installed in suitable well-ventilated places; and**

(b) protected against the effects of moisture to which they may be exposed; and

(c) arranged so as to provide sufficient space for the initial installation and later replacement of individual items of the control and protective devices and accessibility for operation, testing, inspection, maintenance and repair.

COPYRIGHT

Copyright Standards New Zealand

auto login of Electrical Workers Licensing Group is licenced to temporarily download this document.
Electrical Workers Licensing Group may print this document but not more than 10% of the documents subscribed to may be held in printed form at any one time.

* **2.10.2.2** *Accessibility and emergency exit facilities*

A1
A2

2.10.2.2.1 *Switchboards*

Switchboards shall comply with the following provisions:

(a) Located so that the switchboard and access to it is not obstructed by the structure or contents of the building or by fittings and fixtures within the building.

and

(b) Provided with sufficient space around the switchboard on all sides to allow persons to pass to enable all electrical equipment to be safely and effectively operated and adjusted.

This requirement shall be achieved by the following:

(i) A 1.0 m minimum distance from all faces of a closed switchboard that need to be accessed.

Exception: In a domestic electrical installation the 1.0 m distance may be reduced to 0.6 m from the face of the switchboard.

(ii) An unimpeded space of at least 0.6 m around switchboards with switchgear doors in any position and with switchgear in a fully racked out position.

NOTE: Figures 2.19 to 2.23 illustrate access requirements for typical switchboard arrangements.

and

(c) Provided with sufficient exit paths to enable a person to leave the vicinity of a switchboard under emergency conditions.

NOTE: Consideration should be given to providing means of escape from the immediate vicinity of the switchboard in more than one direction, in case of an arcing fault occurring while work is in progress at the switchboard.

2.10.2.2.2 *Switchboard rooms*

Doors shall open in the direction of egress without the use, on the switchboard side of the door, of a key or tool.

Exception: This requirement need not apply to domestic electrical installations.

Where a switchboard is rated at 800 A or greater per phase, or is more than 3.0 m in length, switchboard rooms, or similar enclosed spaces housing the switchboard, to which a person is required to enter in order to access the switchboard, shall comply with the following provisions:

(a) A minimum of two emergency exit paths spaced well apart providing means of escape from the switchboard room.

Exception: Where a clear space of at least 3.0 m is provided in front of the switchboard and its equipment, including switchboard doors, in all

auto login of Electrical Workers Licensing Group is licenced to temporarily download this document.
Electrical Workers Licensing Group may print this document but not more than 10% of the documents subscribed to may be held in printed form at any one time.

Copyright Standards New Zealand

A2

normal positions of operating, opening and withdrawal, only one emergency exit path need be provided. (See Figure 2.24.)

(b) Openings or doorways to the switchboard room shall have an unobstructed height of not less than 2.0 m and an unobstructed width of not less than 0.9 m.

NOTE: Larger openings may be required to enable the entry of prefabricated switchboards; a doorway height of 2.2 m or greater is recommended.

Exception: This requirement need not apply when replacing an existing switchboard in the same location with a switchboard of the same or lesser rating.

2.10.2.2.3 *Switchboard doors and switchboard cupboard doors*

Doors of switchboards or switchboard cupboards that open into passageways or narrow access ways shall be capable of being secured in the open position to prevent workers being inadvertently pushed towards the switchboard.

Exception: This requirement need not apply to domestic electrical installations.

*

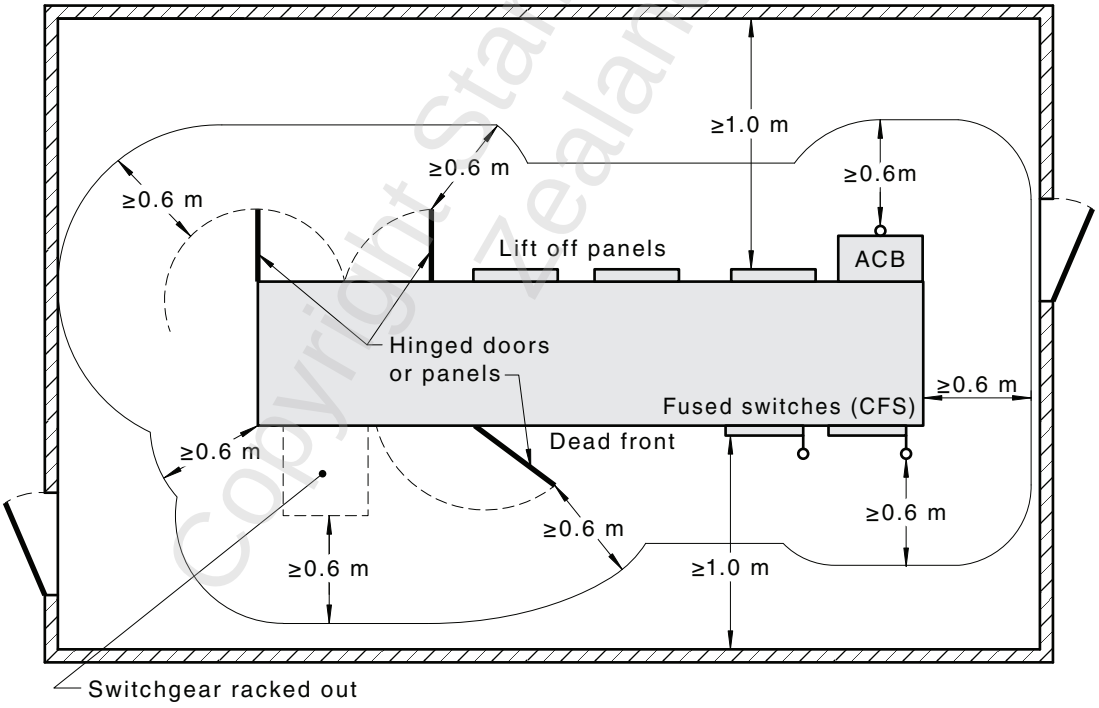

FIGURE 2.19 ACCESS TO SWITCHBOARDS—
FREESTANDING SWITCHBOARD WITH SWITCHGEAR RACKED OUT

Copyright Standards New Zealand

auto login of Electrical Workers Licensing Group is licenced to temporarily download this document.
Electrical Workers Licensing Group may print this document but not more than 10% of the documents subscribed to may be held in printed form at any one time.

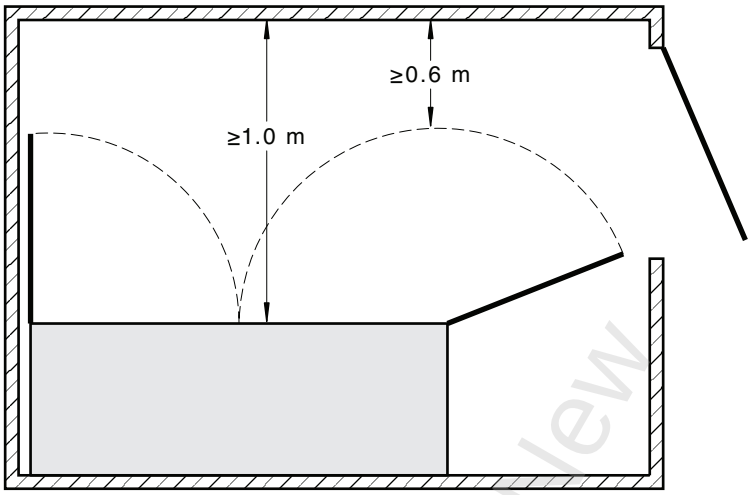

FIGURE 2.20 ACCESS TO SWITCHBOARDS—
SWITCHBOARD IN CORNER POSITION

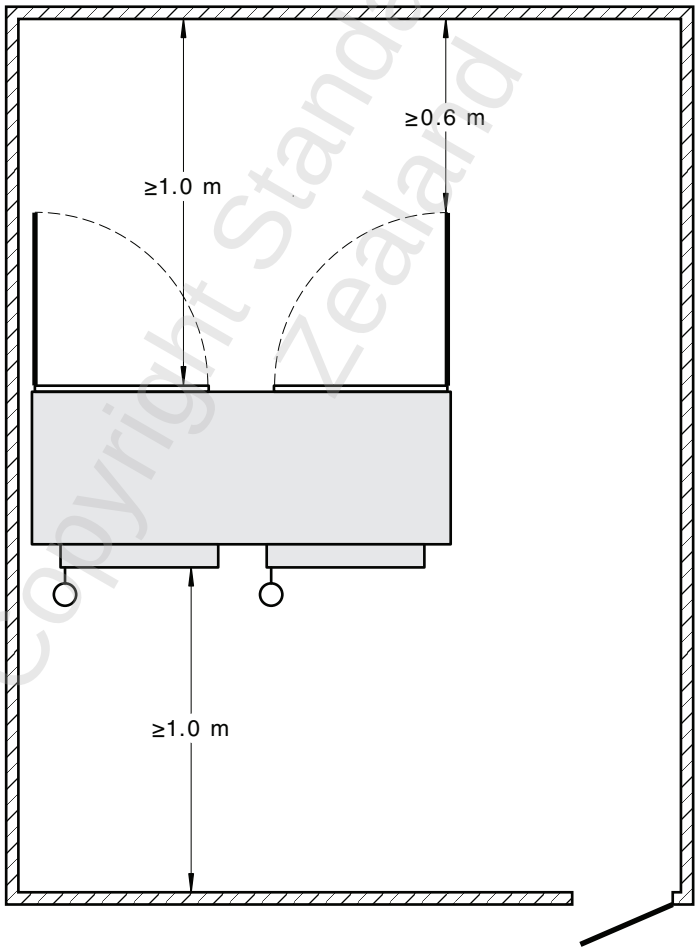

FIGURE 2.21 ACCESS TO SWITCHBOARDS—
SWITCHBOARD WITH ONE END AGAINST WALL

COPYRIGHT

auto login of Electrical Workers Licensing Group is licenced to temporarily download this document.
Electrical Workers Licensing Group may print this document but not more than 10% of the documents subscribed to may be held in printed form at any one time.

Copyright Standards New Zealand

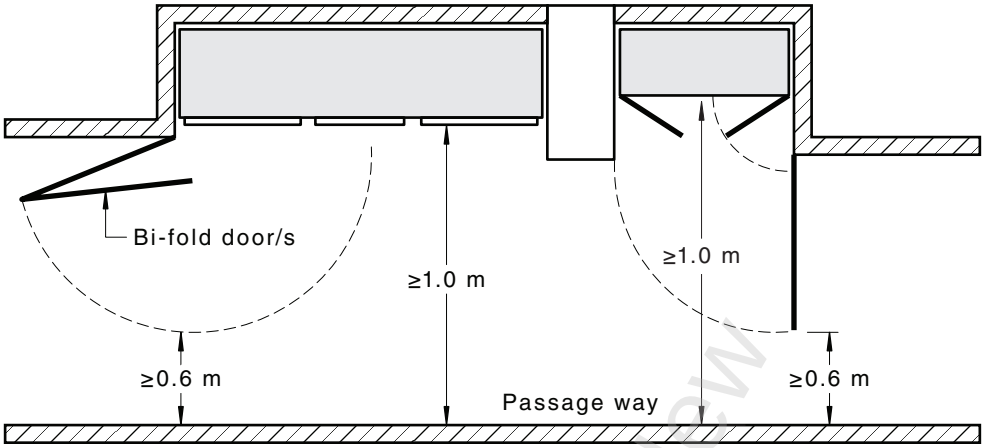

FIGURE 2.22 ACCESS TO SWITCHBOARDS—SWITCHBOARD DOORS THAT OPEN INTO ACCESS WAYS OR NARROW PASSAGE WAYS

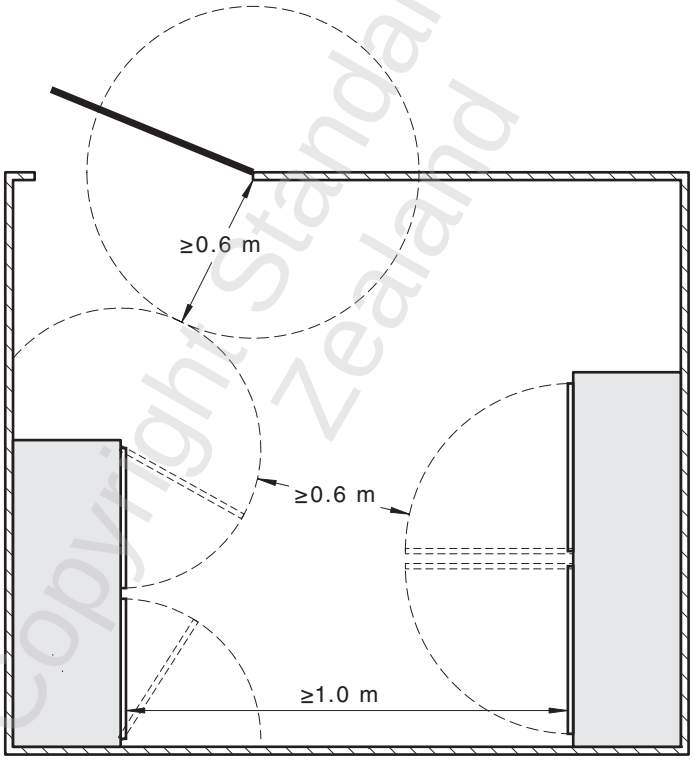

FIGURE 2.23 ACCESS TO SWITCHBOARDS—FACING SWITCHBOARDS

auto login of Electrical Workers Licensing Group is licenced to temporarily download this document.
Electrical Workers Licensing Group may print this document but not more than 10% of the documents subscribed to may be held in printed form at any one time.

Copyright Standards New Zealand

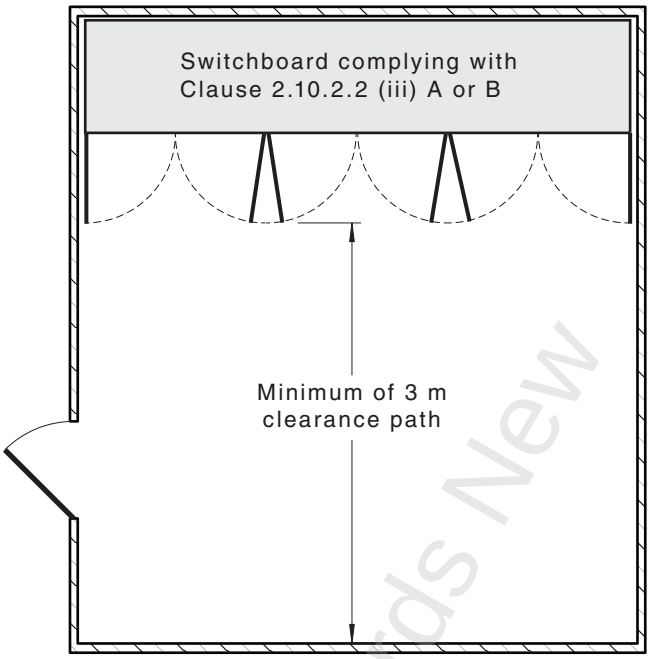

FIGURE 2.24 EXAMPLE OF EXCEPTION TO CLAUSE 2.10.2.2(iii)
WHERE ONLY ONE EXIT PATH NEEDS TO BE PROVIDED

2.10.2.3 *Location of main switchboard*

* A main switchboard shall be located in accordance with the following:

(a) *General* The main switchboard shall be readily accessible. The main switchboard, or a panel for the remote control of main switches in accordance with Clause 2.3.3.6, shall be located within easy access of an entrance to the building.

(b) *Multiple electrical installations* In multiple electrical installations, the main switchboard shall not be located within any tenancy or single electrical installation of a multiple premise, either domestic or non-domestic.

2.10.2.4 *Identification of main switchboard*

The main switchboard shall be legibly and permanently marked ‘MAIN SWITCHBOARD’.

Where a main switchboard is located within a room or enclosure, any door required for immediate personal access shall be prominently and permanently marked to identify the room or enclosure in which the main switchboard is located.

The location of the main switchboard shall be legibly and permanently indicated by a conspicuous notice at each entry to the building that may be used by emergency services personnel.

Copyright Standards New Zealand

auto login of Electrical Workers Licensing Group is licenced to temporarily download this document.
Electrical Workers Licensing Group may print this document but not more than 10% of the documents subscribed to may be held in printed form at any one time.

Notices indicating the location of the main switchboard shall be of permanent construction and shall incorporate the term 'MAIN SWITCHBOARD' in contrasting colours.

Exceptions:

1 *Identification of the main switchboard and its room or enclosure need not apply in a single domestic electrical installation.*

2 *The location of the main switchboard need not be marked at an entry to a building where the location is clearly indicated at a fire indicator panel.*

3 *The location of the main switchboard need not be marked where the location can be readily determined, e.g. where it is clearly visible from the main entrance to the electrical installation.*

NOTE: In New Zealand, any notice indicating the location of the main switchboard needs to comply with the New Zealand Building Code. NZ

* **2.10.2.5** *Restricted locations*

Restricted locations for switchboards are as follows:

(a) *Height above ground, floor or a platform* A switchboard shall not be located within 1.2 m of the ground, floor or platform.

Exception: A switchboard may be located within 1.2 m of the ground, floor or a platform if access to live parts is arranged, in accordance with the requirements of Clause 2.10.3.1.

(b) *Water containers and fixed or stationary cooking appliances* A switchboard shall not be installed above open water containers or fixed or stationary cooking appliances.

NOTE: Refer to Item (d) below for baths and showers.

Exception: A switchboard may be located in an area that may be affected by water splashing or by steam, provided that the switchboard is provided with a suitable enclosure or is installed in a cupboard with close-fitting doors.

(c) *In cupboards* A switchboard installed in a cupboard or similar enclosure shall only be installed in an area set aside for the purpose.

The provisions of Clause 2.10.2.2 require that the switchboard be designed and located to provide readily available access for the purposes of operation and maintenance of equipment mounted on the switchboard. The following restrictions apply to all switchboards.

The switchboard shall be—

A1 (i) installed in a section of the cupboard separated from other sections; and

(ii) installed at the front of the switchboard section of the cupboard; and

COPYRIGHT

Copyright Standards New Zealand

auto login of Electrical Workers Licensing Group is licenced to temporarily download this document.
Electrical Workers Licensing Group may print this document but not more than 10% of the documents subscribed to may be held in printed form at any one time.

(iii) facing the cupboard access door with insufficient unused space between the switchboard and the cupboard door, when closed, to store extraneous objects in front of the switchboard; and

(iv) arranged so that below the area of the switchboard panel or enclosure, there are no projections that obstruct access for the operation and maintenance of the switchboard.

(d) *Near baths and showers* A switchboard shall not be installed within any zone classified in accordance with Clause 6.2.2 for a bath or shower.

NOTE: Areas in the proximity of a shower are deemed unsuitable for switchboards because of the prevalence of high humidity and condensation.

(e) *Near swimming pools, spas or saunas* A switchboard shall not be installed within or above any zone classified in accordance with Clause 6.3.2 for a swimming pool or spa pool.

A switchboard shall not be installed within a sauna.

(f) *Refrigeration rooms* A switchboard shall not be installed within a refrigeration room.

(g) *Sanitization or general hosing-down operations* Switchboards installed in classified zones in locations subject to sanitization or hosing-down operations shall be provided with a minimum degree of protection of IPX6.

(h) *Fire exits and egress paths* Switchboards shall be located or arranged to minimize the impact of any smoke generated from a fault in the switchboard affecting egress from the building.

A switchboard shall not be installed within a fire-isolated stairway, passage way or ramp.

A switchboard may be installed within a cupboard, or similar compartment, in other forms of required exit, or in any corridor, hallway, lobby or the like leading to such an exit, provided that the cupboard or compartment doors are sealed against the spread of smoke from the switchboard.

NOTES:

1 The compartment may be the switchboard enclosure, provided that the enclosure provides a seal to the ingress of dust to at least IP5X and is provided with a facility to be kept locked in normal service.

2 These restrictions are based on the provisions of national building codes to which reference should be made for definition of the terms and for exceptions that may apply.

(i) *Near fire-hose reels* A switchboard shall not be installed within a cupboard containing a fire-hose reel.

NOTE: Information on the installation of fire hydrants and fire-hose reels in buildings is given in national building codes and the AS 2419 series, or NZS 4510 and AS 2441.

COPYRIGHT

auto login of Electrical Workers Licensing Group is licenced to temporarily download this document.
Electrical Workers Licensing Group may print this document but not more than 10% of the documents subscribed to may be held in printed form at any one time.

Copyright Standards New Zealand

(j) *Near automatic fire-sprinklers* The following types of switchboards shall not be installed in the vicinity of an automatic fire-sprinkler system:

(i) Main switchboards.

(ii) Switchboards from which safety services originate in accordance with Clause 7.2.

Exception: A switchboard may be installed in the vicinity of an automatic fire sprinkler system if at least one of the following conditions is satisfied:

(i) The switchboard is provided with degree of protection IPX4, in accordance with AS 60529.

(ii) The switchboard is provided with a shield to prevent water spraying on it.

(iii) Sprinkler heads that could project water on the switchboard are provided with suitable deflectors.

(iv) Sprinkler heads are of the dry type.

(k) *Hazardous areas* Switchboards shall not be installed in hazardous areas as defined in AS/NZS 60079.10.1 or AS/NZS 60079.10.2.

Exception: Switchboards constructed in accordance with AS/NZS 60079.14 may be installed within a hazardous area for which they are specifically designed.

NOTES:

1 The following situations may give rise to a hazardous area:

(a) Heavier-than-air bottled flammable gas cylinders with an aggregate gas capacity exceeding 30 m^3 [e.g. liquid petroleum gas (LPG)].

(b) Gas-tank filling or discharge connections.

(c) Pressure relief device discharge points fitted to gas installations.

2 Refer to AS/NZS 60079.10.1 for information regarding hazardous areas.

* 3 An example of the hazardous area/exclusion zone surrounding heavier-than-air gas cylinder is shown in Figure 4.18.

4 In New Zealand only, an example of the hazardous area/exclusion zone surrounding a reticulated (natural) gas system regulator is shown in Figure 4.20. **NZ**

* **2.10.3 Construction**

2.10.3.1 *Access to live parts*

Live parts shall be arranged so that basic protection is provided by enclosures, in accordance with the provisions of Clause 1.5.4.

Exception: Live parts may be exposed in a non-domestic electrical installation provided that—

COPYRIGHT

Copyright Standards New Zealand

auto login of Electrical Workers Licensing Group is licenced to temporarily download this document.
Electrical Workers Licensing Group may print this document but not more than 10% of the documents subscribed to may be held in printed form at any one time.

(a) the live parts are arranged so that basic protection is provided by barriers in accordance with the provisions of Clause 1.5.4.4; or

(b) the switchboard is installed in an area that is accessible only to authorized persons and the means of access to such areas is provided with facilities for locking.

In situations where the removal of covers and the like exposes live parts, such covers shall be identified in accordance with AS/NZS 3439.1 or AS/NZS 61439.1.

Exception: This requirement does not apply to domestic switchboards.

* **2.10.3.2** *Suitability*

A2

Switchboards shall be suitable to withstand the mechanical, electrical and thermal stresses that are likely to occur in service, and the environment in which they are to be installed.

Switchboards complying with the requirements of the AS/NZS 3439 series or AS/NZS 61439 series are deemed to comply with this Clause (2.10.3).

Switchboards shall comply with AS/NZS 3439 series or AS/NZS 61439 series if one or both of the following exist:

(a) The total of the connected load at the point where the switchboard is installed exceeds 125 A r.m.s. per phase.

(b) The prospective short-circuit current at the incoming terminals of the switchboard is greater than 10 kA r.m.s.

NOTES:

1 Under AS/NZS 61439, switchboards less than or equal to 10 kA r.m.s. short-circuit withstand current, are not required to be independently verified (type-tested) as complete assemblies; but instead may be assembled using standard verified (type-tested) components. Verification of compliance is achieved largely by assessment; relying on component certification and including adherence to the manufacturer's instructions.

2 Appendix K contains guidance on verification of switchboards.

* **2.10.3.3** *Minimum clearances and creepage distances*

All bare conductors and bare live parts of a switchboard shall be rigidly fixed so that a minimum clearance or creepage distance in air, in accordance with the AS/NZS 3439 or AS/NZS 61439 series, is maintained between such conductors or parts of opposite polarity or phase and between such conductors or parts and earth.

Smaller values of clearances and creepage distances may be used—

(a) for individual items of manufactured electrical equipment complying with the relevant standard; or

(b) between a neutral bar and earth, provided that the neutral bar is insulated from earth.

Electrical Workers Licensing Group may print this document but not more than 10% of the documents subscribed to may be held in printed form at any one time.
auto login of Electrical Workers Licensing Group is licenced to temporarily download this document.

Copyright Standards New Zealand

2.10.3.4 *Orientation and location of fuses and circuit-breakers*

* **2.10.3.4.1** *Orientation of circuit-breakers*

Where two or more circuit-breakers are mounted in the same row, the operating mechanism of each shall cause the circuit to open when the operating means are orientated in one general direction.

Other arrangements are permitted where the open circuit condition of each device is obvious or where each device is clearly marked to indicate the off position.

* **2.10.3.4.2** *Location of fuses and circuit-breakers*

Fuses and circuit-breakers shall be located in the following ways:

(a) *Grouping* Fuses and circuit-breakers shall be grouped in such a manner as to indicate their relationship to each other, e.g. equipment—sump pump motor.

(b) *On the back of switchboards or behind switchboard escutcheons* Fuses or circuit-breakers shall not be fixed on the back of, or behind, a switchboard panel, frame or escutcheon.

Exceptions:

1 Fuses used for the following purposes may be fixed on the back of or behind, a switchboard panel, frame or escutcheon:

- *Used solely as a fault-current limiter.*
- *Used to protect instruments or control equipment on the switchboard.*

A1

2 Circuit-breakers and combination fuse switch (CFS) devices may be fixed on the back of, or behind, a switchboard panel frame or escutcheon—

- *provided that they may be operated from the front of the switchboard panel frame or escutcheon; or*
- *if used solely as a fault-current limiter; or*
- *if used to protect instruments or control equipment on the switchboard.*

2.10.3.5 *Screw-in fuses*

Fuses using screw-in carriers shall be connected so that the centre contact is on the supply side of the fuse base.

These fuses include IEC 60269-3 System A Type D.

2.10.4 Bars

* **2.10.4.1** *General*

Bars shall be provided with facilities for securely terminating conductors in accordance with Clause 3.7.

COPYRIGHT

Copyright Standards New Zealand

auto login of Electrical Workers Licensing Group is licenced to temporarily download this document.
Electrical Workers Licensing Group may print this document but not more than 10% of the documents subscribed to may be held in printed form at any one time.

NOTE: Bars that comply with the relevant requirements of AS/NZS 5112 are deemed to comply with this Clause (2.10.4).

2.10.4.2 *Tunnel-type terminals*

All screws that are in direct contact with conductors in tunnel-type terminals shall be of the type designed not to cut the conductor.

A1 Where tunnel-type terminals having clamping screws that are in direct contact with the conductors are provided for connection of—

(a) the main incoming neutral conductor; or

(b) the main earthing conductor; or

(c) the connection between the main earthing terminal/connection or bar and the neutral bar (MEN connection); or

(d) a neutral conductor used as a combined protective earthing and neutral (PEN) conductor for protective earthing of any portion of an electrical installation,

the terminal shall be of a type having—

(i) two screws; or

(ii) one screw with an outside diameter not less than 80% of the tunnel diameter.

NOTE: This requirement does not apply to connections arranged so that the conductor is clamped by suitable ferrules or plates in direct contact with the conductor.

Tunnel-type terminals that comply with AS/NZS 5112 are deemed to comply with the above requirements.

* ### 2.10.4.3 *Neutral bar*

Every switchboard, to which a neutral conductor is connected, shall be provided with a neutral bar that is—

A1 (a) of adequate current-carrying capacity; and

NOTE: The current-carrying capacity of the incoming neutral conductor may be used as a guide.

(b) located in an accessible position to allow all conductors to be safely connected without moving other cables or isolating the supply to the

A1 switchboard; and

(c) designed such that the incoming neutral conductor cannot be inadvertently disconnected from the bar; and

(d) provided with a separate terminal for—

(i) the incoming neutral conductor terminating at the switchboard; and

(ii) the neutral conductor(s) associated with each outgoing circuit originating at the switchboard.

COPYRIGHT

Copyright Standards New Zealand

auto login of Electrical Workers Licensing Group is licenced to temporarily download this document.
Electrical Workers Licensing Group may print this document but not more than 10% of the documents subscribed to may be held in printed form at any one time.

Where tunnel-type terminals are provided, the provisions of Clause 2.10.4.2 shall apply.

A neutral conductor or busbar connection may be used between the neutral bar and a number of multi-pole devices mounted on the switchboard. Where such an arrangement is used, the connection device shall comply with Clause 2.10.4.1 and, where appropriate, Clause 2.10.4.2.

Where a cable is used as the neutral conductor, and is looped between devices on the line side, the connection to each device shall be such that continuity remains when the device is removed. Twisting of conductors is not adequate.

Exception: Where the connection is made at a terminal of switchgear in accordance with the manufacturer's specifications, the provisions of Clauses 2.10.4.1 and 2.10.4.2 need not apply.

2.10.5 Equipment identification

2.10.5.1 *General*

All equipment installed on a switchboard shall be legibly and indelibly identified in the English language in accordance with the requirements of Clauses 2.10.5.2 to 2.10.5.6.

NOTE: See Clauses 2.3.3 and 2.3.4 for the marking requirements for main switches and additional isolating switches.

2.10.5.2 *Relationship of electrical equipment*

The relationship of switches, circuit-breakers, fuses, RCDs and similar electrical equipment to the various sections of the electrical installation shall be marked on or adjacent to the switchboard.

The means of identification shall enable persons to readily identify equipment supplied and the corresponding circuit protective device.

2.10.5.3 *Bars*

Bars shall be identified to indicate whether they are active, neutral or earth.

Exception: Bars need not be identified at switchboards where the colour of the basic insulation of the conductors connected is visible and clearly indicates the nature of the bar.

* **2.10.5.4** *Terminals of switchboard equipment*

Terminals of bars, circuit-breakers, fuses and other electrical equipment mounted on a switchboard shall be marked or arranged to identify the corresponding active and neutral connection for each circuit.

The terminals for the connection of the MEN connection and for the main neutral conductor shall be legibly and indelibly marked at the main neutral bar.

A1 *Exception: This marking need not apply to the following:*

Where the MEN connection is made at a terminal at one extremity of the bar and the main neutral conductor is connected to the next adjacent terminal.

COPYRIGHT

Copyright Standards New Zealand

auto login of Electrical Workers Licensing Group is licenced to temporarily download this document.
Electrical Workers Licensing Group may print this document but not more than 10% of the documents subscribed to may be held in printed form at any one time.

Where the MEN connection is made at another location, such as a substation, in accordance with Clause 5.3.5.1, the location of the connection shall be legibly and indelibly marked at the main switchboard.

Compliance with AS/NZS 5112 satisfies the above requirements.

2.10.5.5 *Common neutral*

Where a common neutral is used for two or more different circuits it shall be legibly and permanently marked to identify the associated active conductors.

NOTE: The requirements of Clause 2.2.1.2 also apply to the use of a common neutral conductor.

2.10.5.6 *Fuse*

Where the marking of the fuse base does not correctly indicate the rating of the associated fuse-element, the rating of the fuse-element shall be marked either on an exposed non-detachable portion of the fuse or on its enclosing case, or on the switchboard adjacent to the fuse.

A number of fuses may be marked as a group, instead of independent marking adjacent to each fuse, where—

(a) each fuse-element is of identical rating; and

(b) the fuses are mounted adjacent to each other.

2.10.6 Wiring

Switchboard wiring shall be designed and installed to withstand any thermal and magnetic effects on the conductors.

Where provision is made to hinge or remove switchboard panels, all conductors connected to electrical equipment on the switchboard panel shall be—

A1 (a) provided with sufficient free length to allow the panel to be moved into a position to enable work to be carried out; and

(b) suitably fixed or otherwise retained in position to avoid undue movement or stress at terminals of electrical equipment when the panel is moved or is fixed in position; and

(c) arranged to prevent undue pressure on electrical equipment mounted behind the panel.

2.10.7 Fire-protective measures

Wiring associated with switchboards shall be installed in such a manner that, in the event of fire originating at the switchboard, the spread of fire will be kept to a minimum.

Where a switchboard is enclosed in a case or surround, any wiring systems entering the switchboard enclosure shall pass through openings that provide a close fit.

auto login of Electrical Workers Licensing Group is licenced to temporarily download this document.
Electrical Workers Licensing Group may print this document but not more than 10% of the documents subscribed to may be held in printed form at any one time.

Copyright Standards New Zealand

Where a switchboard is enclosed in a case or surround, any wiring systems entering the switchboard enclosure shall pass through openings that provide a close fit.

NOTES:

1 See also Clause 2.10.2.5(h) regarding restricted location of switchboards in or near egress paths or fire exits and Clause 3.9.9 regarding requirements to prevent the spread of fire.

2 There is a very high risk that wiring enclosures, especially those that enter at the top or sides of a switchboard, will contribute to the spread of fire and for this reason care needs to be taken to ensure that these wiring systems are provided with close-fitting entries. In some cases internal sealing should be provided.

3 An opening with less than 5 mm diameter of free space is considered to be a close fit. Therefore, any opening of 5 mm diameter or greater requires sealing with a fire-retardant sealant.

4 Wiring enclosures, such as conduits, having an internal free space of greater than 5 mm diameter also require sealing to stop any draft effect that could allow the spread of fire.

auto login of Electrical Workers Licensing Group is licenced to temporarily download this document.
Electrical Workers Licensing Group may print this document but not more than 10% of the documents subscribed to may be held in printed form at any one time.

Copyright Standards New Zealand

SECTION 3 SELECTION AND INSTALLATION OF WIRING SYSTEMS

3.1 GENERAL

3.1.1 Application

This Section specifies the minimum requirements for the selection and installation of wiring systems that shall be achieved to satisfy Part 1 of this Standard.

3.1.2 Selection and installation

Wiring systems shall be selected and installed to perform the following functions or have the following features:

(a) Protect against physical contact with live parts by durable insulation materials or by placing live parts out of reach.

(b) Satisfy current-carrying capacity, voltage drop and other minimum size requirements for conductors.

(c) Provide reliability and electrical continuity of connections, joints and terminations.

(d) Provide adequate strength of supports, suspensions and fixings.

(e) Suit intended use, including applications requiring a particular type of wiring system, e.g. fire-resistance, explosion protection, safety services.

(f) Protect against mechanical damage, environmental and other external influences by enclosure or other means.

(g) Installed in accordance with the requirements of this Section and the additional requirements as specified in the manufacturer's instructions.

Characteristics of wiring systems that shall be considered include conductor materials, core identification, insulation properties, temperature rise, bending and tension limitations.

3.2 TYPES OF WIRING SYSTEMS

The type of wiring system and method of installation used shall either—

(a) comply with Table 3.1; or

(b) have a degree of safety equivalent to that given in Table 3.1.

auto login of Electrical Workers Licensing Group is licenced to temporarily download this document.
Electrical Workers Licensing Group may print this document but not more than 10% of the documents subscribed to may be held in printed form at any one time.

Copyright Standards New Zealand

3.3 EXTERNAL INFLUENCES

3.3.1 General

Wiring systems shall be able to operate safely and shall function properly in the conditions to which they are likely to be exposed at the point of installation.

To effectively protect against the presence and extent of relevant environmental and other influences, characteristics of wiring systems may comprise—

(a) suitable design and construction of the wiring system; or

(b) additional means, provided as part of the electrical installation, that do not adversely affect their operation.

NOTE: AS 60529 provides an IP classification and marking system for electrical equipment and enclosures that provide different degrees of protection against the entry of water and solid objects (see Appendix G for illustrations).

3.3.2 Particular influences

3.3.2.1 *Ambient temperature*

Wiring systems shall be selected and installed so as to be suitable for the highest and lowest local ambient temperatures.

Where materials subject to temperature limitations are used above 60°C, or below 0°C, manufacturer's instructions shall be followed.

Allowance shall be made for expansion of materials because of temperature variations that may occur in normal conditions of use.

Where current-carrying capacity is selected in accordance with the AS/NZS 3008.1 series, the reference ambient temperatures shall be as follows:

(a) For cables in air, irrespective of the method of installation—

(i) for Australia, 40°C; and **A**

(ii) for New Zealand, 30°C. **NZ**

(b) For cables buried direct in the ground or installed in underground enclosures—

(i) for Australia, 25°C; and **A**

(ii) for New Zealand, 15°C. **NZ**

Copyright Standards New Zealand

auto login of Electrical Workers Licensing Group is licenced to temporarily download this document.
Electrical Workers Licensing Group may print this document but not more than 10% of the documents subscribed to may be held in printed form at any one time.

COPYRIGHT

TABLE 3.1

CABLE TYPES AND THEIR APPLICATION IN WIRING SYSTEMS

Installation method		Description		Typical cable types
		Unenclosed	On a surface (including cable tray or ladder)	Insulated and sheathed Screened or armoured Mineral insulated, metal sheathed (MIMS) Earthing conductors
			On a surface partly surrounded by thermal insulation	
			Fully surrounded by thermal insulation	
			Buried direct in the ground, subject to the requirements of Clause 3.11	Insulated and sheathed, screened or armoured, earthing conductors

(*continued*)

Copyright Standards New Zealand

auto login of Electrical Workers Licensing Group is licenced to temporarily download this document.
Electrical Workers Licensing Group may print this document but not more than 10% of the documents subscribed to may be held in printed form at any one time.

TABLE 3.1 (*continued*)

Installation method		Description		Typical cable types
		In an enclosure	On a surface (including cable trunking)	Insulated, unsheathed Insulated and sheathed Screened or armoured MIMS Earthing conductors
			On a surface and partly surrounded by thermal insulation	
			Fully surrounded by thermal insulation	
			Underground, subject to the requirements of Clause 3.11	Insulated, unsheathed Insulated and sheathed Screened or armoured Earthing conductors
		Supported on a catenary system		Insulated and sheathed Screened or armoured Earthing conductors
		Supported on insulators		Aerial conductors Earthing conductors

COPYRIGHT

Copyright Standards New Zealand

auto login of Electrical Workers Licensing Group is licenced to temporarily download this document.
Electrical Workers Licensing Group may print this document but not more than 10% of the documents subscribed to may be held in printed form at any one time.

auto login of Electrical Workers Licensing Group is licenced to temporarily download this document.
Electrical Workers Licensing Group may print this document but not more than 10% of the documents subscribed to may be held in printed form at any one time.

3.3.2.2 *External heat sources*

Wiring systems shall be protected against the effects of heat from external sources, including solar gain, by one or more of the following methods:

(a) Shielding.

(b) Placing sufficiently far from the source of heat.

(c) Selecting a system with due regard for the additional temperature rise that may occur.

(d) Limiting the current to be carried by the cable so as to reduce its operating temperature.

(e) Local reinforcement or substitution of insulating material.

(f) A method equivalent to one or more of those listed in Items (a) to (e).

Parts of a cable or flexible cord within an accessory, appliance or luminaire shall be suitable for the temperatures likely to be encountered, or shall be provided with additional insulation suitable for those temperatures.

* **3.3.2.3** *Water or high humidity*

Wiring systems shall be selected and installed so that high humidity or the entry of water does not cause damage.

Where water may collect or condensation may form in a wiring system, to the extent that it creates a hazard, provision shall be made for its harmless escape through suitably located drainage points.

Where a wiring system may be subjected to wave action (water), protection against excessive flexing and mechanical damage shall be provided in accordance with Clauses 3.3.2.6, 3.3.2.7 and 3.3.2.8.

* **3.3.2.4** *Solid foreign bodies*

Wiring systems shall be selected and installed so as to minimize the entry of solid foreign bodies during installation, use and maintenance.

In a location where dust or any other substance, in significant quantity, may be present, additional precautions shall be taken to prevent its accumulation in quantities that could adversely affect the heat dissipation from the wiring system.

* **3.3.2.5** *Corrosive or polluting substances*

Where the presence of corrosive or polluting substances is likely to cause corrosion or deterioration, those parts of the wiring system likely to be affected shall be suitably protected or manufactured from materials resistant to such substances.

Dissimilar metals liable to initiate galvanic action shall not be placed in contact with each other.

Materials liable to cause mutual or individual deterioration, or hazardous degradation, shall not be placed in contact with each other.

COPYRIGHT

NOTE: The effect of substances, such as esters, ketones, ethers, and aromatic and chlorinated hydrocarbons, should be considered when using insulating conduit, enclosures, cables or equipment.

* **3.3.2.6** *Mechanical damage*

Wiring systems shall be selected and installed so as to minimize the risk of mechanical damage.

Protection against mechanical damage shall be provided by one or any combination of the following:

(a) Mechanical characteristics of the wiring system.

(b) Location selected.

(c) Provision of additional local or general mechanical protection.

NOTE: Guide to adequacy and WS classification is provided in Appendix H.

3.3.2.7 *Vibration*

Wiring systems subject to vibration that is likely to cause damage to the wiring system, including all cables, fixings and connections, shall be suitable for the conditions.

3.3.2.8 *Other mechanical stresses*

Wiring systems shall be selected and installed so as to minimize damage to the cable insulation, sheathing and connections during installation, operation and maintenance.

Measures undertaken to minimize damage may include the following:

(a) Provision of supports, continuous or at appropriate intervals suitable for the mass of the cable.

(b) Use of suitable fixings for the cable size and type that hold the cable in position without damage.

(c) Use of suitable connections for the cable size and type that reduce mechanical strain at joints and terminations.

(d) Attention to minimum bending radius limits of cables.

(e) Provision of flexibility to accommodate any movement or tension stresses.

* **3.3.2.9** *Flora*

Where the presence of flora is expected to constitute a hazard, either the wiring system shall be selected accordingly, or special protective measures shall be adopted.

* **3.3.2.10** *Fauna*

Where the presence of fauna is expected to constitute a hazard, either the wiring system shall be selected accordingly, or special protective measures shall be adopted.

auto login of Electrical Workers Licensing Group is licenced to temporarily download this document.
Electrical Workers Licensing Group may print this document but not more than 10% of the documents subscribed to may be held in printed form at any one time.

Copyright Standards New Zealand

3.3.2.11 *Solar radiation (direct sunlight)*

Where a wiring system is, or may be, exposed to direct sunlight, either a wiring system suitable for the conditions shall be selected and installed, or adequate shielding shall be provided, in accordance with Clause 3.3.2.2.

NOTES:

1 Sheathed cables exposed to direct sunlight do not require further protection from UV radiation, unless otherwise advised by the manufacturer, as the sheath is considered to provide the necessary protection.

Black insulated unsheathed cables, e.g. aerial conductors, with UV-resistant insulation complying with AS/NZS 3808, do not require further protection.

For insulated unsheathed cables with insulation colours other than black, the manufacturer's recommendation should be sought, or the cable should be provided with a physical barrier to prevent exposure to direct sunlight.

2 Guidance on the effect of direct sunlight on the current-carrying capacity of cables is given in the AS/NZS 3008.1 series. A correction factor for a temperature 20°C higher than the ambient air temperature may be applied.

3.3.2.12 *Hazardous areas*

Wiring systems installed in areas subject to explosive gas atmospheres and explosive dust atmospheres shall be selected and installed in accordance with Clause 7.7.

* **3.3.2.13** *Thermal insulation*

Where cables pass through bulk thermal insulation they shall be rated for current-carrying capacity, in accordance with the AS/NZS 3008.1 series, by length of cable passing through insulation, as follows:

(a) ≤150 mm—using the 'in air touching a surface' rating.

(b) >150 mm to 400 mm—using the 'partially surrounded' rating.

(c) >400 mm—using the 'completely surrounded' rating.

NOTE: In New Zealand, attention is drawn to the requirements of NZECP 55 for wiring and fittings located near conductive thermal insulation. **NZ**

3.4 CURRENT-CARRYING CAPACITY

3.4.1 General

Every conductor shall have a current-carrying capacity in accordance with the AS/NZS 3008.1 series, not less than the current to be carried by the conductor.

In determining the required current-carrying capacity, provision shall be made for reasonably foreseeable changes to external influences, such as the installation of thermal insulation in ceiling spaces and walls.

* Wiring systems in domestic installations shall be installed on the assumption that thermal insulation in ceilings, walls and under floors, if not currently installed, will be installed in the future.

COPYRIGHT

Copyright Standards New Zealand

auto login of Electrical Workers Licensing Group is licenced to temporarily download this document.
Electrical Workers Licensing Group may print this document but not more than 10% of the documents subscribed to may be held in printed form at any one time.

A1 *Exception: This requirement does not apply to the existing wiring system when extending or altering the circuit.*

NOTES:

1 Appendix C, Paragraph C3 provides a set of current ratings that may be assigned to circuits in typical simple installations as an alternative to compliance with the AS/NZS 3008.1 series. The ratings assign cable current-carrying capacities that are aligned with the current rating of protective devices.

2 National building codes contain mandatory requirements for the thermal insulation of ceilings and walls in certain situations.

3 The AS/NZS 5000 series of cable standards provide higher operating temperature materials for some cable insulation than was the case with their predecessors.

4 Current-carrying capacities for busbars and busways should be obtained from the manufacturer. Information relating to busways is given in AS/NZS 3439.2 or AS/NZS 61439.6.

3.4.2 Operating temperature limits

The operating temperatures of conductors shall not exceed the limits given in Table 3.2.

Polymeric cables with normal use temperatures below 75°C (see Notes to Table 3.2) are deemed not suitable for Australian or New Zealand conditions.

Copyright Standards NZW Zealand

auto login of Electrical Workers Licensing Group is licenced to temporarily download this document.
Electrical Workers Licensing Group may print this document but not more than 10% of the documents subscribed to may be held in printed form at any one time.

TABLE 3.2
LIMITING TEMPERATURES FOR INSULATED CABLES

Type of cable insulation[1]	Operating temperature of conductor, °C		
	Normal use[2]	Maximum permissible[7]	Minimum ambient[3]
Thermoplastic[4]			
V-75	75	75	0
HFI-75-TP, TPE-75	75	75	–20
V-90	75	90	0
HFI-90-TP, TP-90	75	90	–20
V-90HT	75	105	0
Elastomeric			
R-EP-90	90	90	–40
R-CPE-90, R-HF-90, R-CSP-90	90	90	–20
R-HF-110, R-E-110	110	110	*
R-S-150	150	150	–50
Cross-linked polyethylene			
X-90, X-90UV, X-HF-90	90	90	*
X-HF-110	110	110	*
MIMS[5]	100	250	[6]
Other types			
PE, LLDPE	70	70	*

* Refer to manufacturer's information.

NOTES:

1 The types of cable insulation given in Table 3.2 are included in relevant specifications, i.e. the AS/NZS 5000 series, AS/NZS 3191, AS/NZS 3808 and AS/NZS 60702.1.

2 Lower maximum temperatures will apply where materials used in the construction of the cables or in association therewith, such as coverings, sheathings, insulating sleeving on connections and sealing compounds, have maximum operating temperatures lower than the cable proper. However, the allowable operating temperatures for such materials shall not be exceeded.

3 If manufacturer's recommendations permit, cables may be installed in locations where temperatures lower than specified may occur.

4 The normal operating temperature of thermoplastic cables, including flexible cords installed as installation wiring, is based on a conductor temperature of 75°C. This is because of the risk of thermal deformation of insulation if the cables are clipped, fixed or otherwise installed in a manner that exposes cable to severe mechanical pressure at higher temperatures.

Electrical Workers Licensing Group is licenced to temporarily download this document.
auto login of Electrical Workers Licensing Group may print this document but not more than 10% of the documents subscribed to may be held in printed form at any one time.

Copyright Standards New Zealand

V-90 and V-90HT insulated cables may be operated up to the maximum permissible temperatures of 90°C and 105°C, provided that the cable is installed in a manner that is not subject to, or is protected against, severe mechanical damage for temperatures higher than 75°C. Such applications also allow for cables to be installed in—

(a) locations where the ambient temperature exceeds 40°C, e.g. equipment wiring in luminaires and heating appliances, or in roof spaces affected by high summer temperatures; and

(b) locations affected by bulk thermal insulation that restricts the dissipation of heat from the cable.

5 The current-carrying capacities for MIMS cables are based on an operating temperature of 100°C for the external surface of either bare metal-sheathed cables or served cables. Higher continuous operating temperatures are permissible for bare metal-sheathed cables, dependent on factors such as the following:

(a) The suitability of the cable terminations and mountings.

(b) The location of the cable away from combustible materials.

(c) The location of the cable away from areas where there is a reasonable chance of persons touching the exposed surface.

(d) Other environmental and external influences.

6 The minimum ambient temperature of use for MIMS cables depends on the cable seal used and manufacturer's recommendations should be followed.

7 Current-carrying capacities determined in accordance with the AS/NZS 3008.1 series do not take into account the effect of temperature rise on the terminals of electrical equipment that can result in the temperature limits of the insulation of cables in the vicinity of the terminals exceeding the limits specified in Table 3.2. In such cases reference should be made to warnings given in the electrical equipment Standards.

3.4.3 Conductors in parallel

Current-carrying capacities for circuits comprising parallel multi-core cables or groups of single-core cables may be determined from the sum of the current-carrying capacity of the various cables connected in parallel provided that the following requirements are met:

(a) Cables shall be not less than 4 mm^2.

A2

Exception: The minimum conductor cross-sectional area of 4 mm2 need not apply to cores of flexible trailing or reeling cables, e.g. specialized flexible trailing cables used in lift installations.

(b) Grouping of cables shall not affect the cooling of each parallel cable, or group, by the ambient air or the ground.

(c) The load current sharing between each parallel cable or group shall be sufficient to prevent overheating of any cable or group.

Example:

Equal load current sharing may be achieved by the selection and installation of cables to give the same impedance for each cable in the group. This condition is satisfied when—

COPYRIGHT

auto login of Electrical Workers Licensing Group is licenced to temporarily download this document.
Electrical Workers Licensing Group may print this document but not more than 10% of the documents subscribed to may be held in printed form at any one time.

Copyright Standards New Zealand

(i) conductors are of the same material and cross-sectional area with a minimum size of 4 mm^2;

(ii) cables follow the same route and achieve the same length;

(iii) conductors of each parallel cable, or group, are effectively joined together at each end; and

(iv) the relative position of phase and neutral conductors in and between parallel groups takes account of mutual impedance.

Exception: Unequal load current sharing between cables or groups may be permitted, in accordance with Part 1 of this Standard, provided that the design current and overcurrent protection requirements for each cable or group are considered individually. IEC 60364-4-43 provides further information on the conditions under which this is permitted.

NOTE: The AS/NZS 3008.1 series provides recommended circuit configurations for the installation of parallel single-core cables in electrically symmetrical groups. The recommended method is to use trefoil groups containing each of the three phase conductors and neutral in each group.

3.4.4 Coordination between conductors and protective devices

In accordance with Clause 2.5.3, the continuous current-carrying capacity of the cables shall be coordinated with the current for which the circuit is designed and the type and current rating of the overload protective device.

Taking into account the different overload operating characteristics for fuses and circuit-breakers, one of the relevant following conditions shall be satisfied:

(a) The current rating of circuit-breakers shall not be greater than the cable current-carrying capacity ($I_B \leq I_N \leq I_Z$; see Clause 2.5.3.1).

(b) The current rating of HRC fuses shall not be greater than 90% of the cable current-carrying capacity ($I_B \leq I_N \leq 0.9\ I_Z$; see Clause 2.5.3.1).

3.5 CONDUCTOR SIZE

3.5.1 General

The nominal cross-sectional area of conductors shall be not less than the values given in Table 3.3.

COPYRIGHT

Copyright Standards New Zealand

auto login of Electrical Workers Licensing Group is licenced to temporarily download this document.
Electrical Workers Licensing Group may print this document but not more than 10% of the documents subscribed to may be held in printed form at any one time.

auto login of Electrical Workers Licensing Group is licenced to temporarily download this document.
Electrical Workers Licensing Group may print this document but not more than 10% of the documents subscribed to may be held in printed form at any one time.

TABLE 3.3

NOMINAL MINIMUM CROSS-SECTIONAL AREA OF CONDUCTORS

Type of wiring system	Use of the circuit	Conductor	
		Material	Cross-sectional area mm²
Insulated conductors	Socket-outlets (see *Exception 1*)	Copper	2.5
	Other circuits		1
	Signal and relay control circuits		0.5
Bare conductors	—	Copper	6
Insulated flexible conductors	—	Copper	0.75
Aerial wiring	—	Copper	6
		Aluminium	16

Exceptions:

1 *Smaller conductors may be used on subcircuits supplying socket-outlets, based on their suitability, in accordance with this Standard, and taking account of voltage drop, current-carrying capacity and reliability of connections.*

2 *Table 3.3 does not limit cable sizes for extra-low voltage or switchboard wiring.*

NOTE: The size of unprotected consumer mains should be coordinated with the electricity distributor.

3.5.2 Neutral conductor

The minimum size of the neutral conductor shall be as follows:

(a) *Single-phase two-wire circuit* The neutral conductor or conductors of a single-phase consumer main, submain or final subcircuit shall have a current-carrying capacity not less than—

(i) the current-carrying capacity of the associated active conductor; or

(ii) the total current to be carried, where there is more than one active conductor.

(b) *Multiphase circuit* The current-carrying capacity of the neutral conductor of a multiphase circuit shall not be less than that determined in accordance with the following:

(i) *Harmonic currents* Where a consumer main, submain or final subcircuit supplies a substantial load that generates harmonic currents, e.g. fluorescent lighting, computers, soft starters, variable speed devices or other electronic devices, the third and any higher order harmonic current generated in the equipment

Copyright Standards New Zealand

shall be added to the maximum out-of-balance load to determine the current to be carried by the neutral conductor.

For this purpose the third and any higher order harmonic current in the neutral conductor shall be taken as 100% of the highest load-generating harmonic currents on any phase.

NOTES:

1 A harmonic current load that constitutes not less than 40% of the total load on any single-phase is regarded as substantial.

2 The third harmonic currents (and odd multiples thereof) are additive to the normal 50 Hz current to be carried. Therefore, it may be necessary for the capacity of a neutral conductor to be greater than that of the associated active conductors. Further information can be obtained from a number of sources including IEC 60364-5-52.

(ii) *Consumer mains, submains and final subcircuits* The current-carrying capacity of the neutral conductor of multiphase consumer mains, submains or final subcircuit shall be not less than that of the current-carrying capacity of the largest associated active conductor.

NOTE: Where more than one active conductor is connected to the one phase, the associated active conductor, for the purposes of this Clause, is the sum of the cross-sectional areas of all conductors connected to any one phase, e.g. conductors connected in parallel or separately metered portions of consumer mains operating on the same phase.

Exceptions:

1 Out-of-balance currents that may arise from the operation of protective devices and other similar abnormal conditions need not be considered.

2 The neutral conductor of a multiphase circuit may have a current-carrying capacity lower than that determined by this Clause, provided that a detection device is fitted and arranged so that the neutral current cannot exceed the current-carrying capacity of the neutral conductor.

3 The neutral conductor of a multiphase circuit may have a current-carrying capacity less than that of the largest associated active conductor, provided that the predominant load consists of multiphase equipment and the current-carrying capacity is not less than the maximum out-of-balance current, including any harmonic component.

auto login of Electrical Workers Licensing Group is licenced to temporarily download this document.
Electrical Workers Licensing Group may print this document but not more than 10% of the documents subscribed to may be held in printed form at any one time.

Copyright Standards New Zealand

(c) *PEN conductors* The minimum size of a combined protective earth and neutral (PEN) conductor of consumer mains, or of a submain to an outbuilding of an electrical installation forming a separate MEN installation in accordance with Clause 5.5.3.1, shall—

(i) comply with the requirements of Item (a) or Item (b), as appropriate; and

(ii) be not less than that of an earthing conductor as required by Clause 5.3.3.

3.5.3 Earthing conductor

The size of an earthing conductor shall be determined in accordance with Clause 5.3.3.

3.6 VOLTAGE DROP

3.6.1 General

Under normal service conditions, the voltage at the terminals of any power-consuming electrical equipment shall be not less than the lower limit specified in the relevant electrical equipment Standard.

Where the electrical equipment concerned is not covered by a Standard, the voltage at the terminals shall be such as not to impair the safe functioning of the electrical equipment.

3.6.2 Value

The cross-sectional area of every current-carrying conductor shall be such that the voltage drop between the point of supply for the low voltage electrical installation and any point in that electrical installation does not exceed 5% of the nominal voltage at the point of supply.

The value of current used for the calculation of voltage drop on a circuit need not exceed the—

(a) total of the connected load supplied through the circuit;

(b) maximum demand of the circuit; or

(c) current rating of the circuit protective device.

NOTES:

1 Motor-starting, solenoid-closing and other similar applications which may cause high transient currents, causing an increased transient voltage drop are excluded from consideration.

2 A simplified method of estimating voltage drop is provided in Appendix C. Detailed information on choosing conductor sizes, taking into account voltage drop, is given in the AS/NZS 3008.1 series.

* 3 For voltage rise (reverse voltage drop) in grid connected inverters, refer to AS/NZS 4777.1.

COPYRIGHT

auto login of Electrical Workers Licensing Group is licenced to temporarily download this document.
Electrical Workers Licensing Group may print this document but not more than 10% of the documents subscribed to may be held in printed form at any one time.

Copyright Standards New Zealand

Exceptions:

A2

1 *For final subcircuits, with distributed load (such as socket-outlets or lighting), half the current rating of the protective device may be used.*

2 *This Clause does not apply to high voltage or extra-low voltage circuits (see Clauses 7.6 and 7.5 respectively).*

3 *Where the point of supply is the low voltage terminals of a substation located on the premises containing the electrical installation and dedicated to the installation, the permissible voltage drop may be increased to 7%.*

4 *The 5% voltage drop limitation need not apply to stand-alone systems, in accordance with Clause 7.3, that are designed such that the combination of the output voltage from the source, together with the voltage drop within the installation, does not result in the utilization voltage, at equipment and appliances intended to operate at low voltage, falling more than a total of 11% below the nominal supply voltage under normal operating conditions.*

3.6.3 Conductors in parallel

The voltage drop for a circuit in which conductors are connected in parallel shall be taken as the voltage drop in one of the conductors when that conductor is carrying the current determined by dividing the value of the current of the circuit determined in accordance with Clause 3.6.2 by the number of conductors in parallel.

3.7 ELECTRICAL CONNECTIONS

3.7.1 General

Connections between conductors and between conductors and other electrical equipment shall provide electrical continuity, an appropriate level of insulation and adequate mechanical strength.

The method of joining or connecting cables shall be suitable for the application and ensure that the conductivity of the joint or connection is not less than that of the conductor.

All cables and conductors shall be installed so that there is no undue mechanical stress on any connection.

3.7.2 Connection methods

3.7.2.1 *General*

3.7.2.1.1 *Common requirements*

The selection of the method of connection shall take account of the following factors, as appropriate:

(a) Material of the conductor and its insulation.

COPYRIGHT

auto login of Electrical Workers Licensing Group is licenced to temporarily download this document.
Electrical Workers Licensing Group may print this document but not more than 10% of the documents subscribed to may be held in printed form at any one time.

Copyright Standards New Zealand

(b) Number and shape of the wires forming the conductor.

(c) Cross-sectional area of the conductor.

(d) Number of conductors being connected together.

* (e) Temperature attained by terminals in normal service such that the effectiveness of the insulation of the conductors is not impaired at the point where insulation is relied upon.

NOTE: Refer to AS/NZS 61439 for switchboard terminals.

(f) Prevention of entry of moisture and the siphoning of water through any cable or wiring enclosure.

3.7.2.1.2 *Aluminium conductors*

Connections to, and joints in, aluminium conductors shall be made using components specifically designed for the connection of aluminium conductors and techniques specified by the manufacturer.

When connecting aluminium conductors, the following special factors associated with aluminium should be considered:

(a) Removal of the aluminium oxide film from the conductors.

(b) The relative softness of aluminium.

(c) The different coefficient of linear expansion of aluminium and other metals.

(d) Avoiding contact with dissimilar metals that may initiate galvanic action.

3.7.2.2 *Preparation for connection*

The insulation on a conductor shall not be removed any further than is necessary to make the connection.

For connections between insulated conductors, the connection shall be insulated to provide a degree of insulation not inferior to that of the conductors. Any damaged insulation shall be reinstated.

3.7.2.3 *Loosening of connections*

3.7.2.3.1 *General*

Connections shall be made so that no loosening is likely because of vibration, alteration of materials or temperature variations to which the connections are likely to be subjected in normal service.

3.7.2.3.2 *Crimp joints (compression joints)*

Conductors joined or terminated by means of a crimp (compression) connection shall be securely retained within a suitable crimping device. The connection shall be made using a tool designed for the purpose and techniques specified by the manufacturer.

auto login of Electrical Workers Licensing Group is licenced to temporarily download this document.
Electrical Workers Licensing Group may print this document but not more than 10% of the documents subscribed to may be held in printed form at any one time.

Copyright Standards New Zealand

3.7.2.4 *Mechanical connection devices*

Mechanical connection devices that meet the following criteria may be used for the connection of conductors.

Such devices shall—

(a) comply with an appropriate Standard;

(b) not be dependent upon compression of insulating material for an effective electrical connection;

(c) have a short-circuit rating suitable for the application;

(d) have a long-term current-carrying capacity not less than that of the conductors they are designed to connect;

(e) if capable of being re-used, suffer no deterioration in performance when re-used;

(f) include manufacturer's information regarding their correct use or re-use for users when supplied; and

(g) be installed using the techniques specified by the manufacturer for the application.

3.7.2.5 *Retention of stranded conductors*

The ends of stranded conductors shall be secured by suitable means, so as to prevent the spreading or escape of individual strands. They shall not be soft-soldered before clamping under a screw or between metal surfaces.

3.7.2.6 *Mechanical stress*

All cables and conductors shall be installed so that there is no undue mechanical stress on any connection.

3.7.2.7 *Soldered connections*

Where a soldered connection is used, the design shall take account of creep, mechanical stress and temperature rise under fault conditions.

Soft-soldered connections shall not be clamped under a screw or between metal surfaces.

NOTE: Soldered connections are not permitted for aerial conductors in tension. (See Clause 3.7.2.9.1.)

3.7.2.8 *Flexible cords*

Joints in flexible cords used as installation wiring shall be made in accordance with the requirements of Clauses 3.7.2.2 to 3.7.2.7 or by means of suitable cable couplers.

Connections between a flexible cord used as equipment wiring to installation wiring shall be made in a purpose-made device containing suitable screwed or crimped terminals.

NOTE: Requirements for conductor identification are detailed in 3.8.1.

COPYRIGHT

auto login of Electrical Workers Licensing Group is licenced to temporarily download this document.
Electrical Workers Licensing Group may print this document but not more than 10% of the documents subscribed to may be held in printed form at any one time.

Copyright Standards New Zealand

Any flexible cord shall be installed so that undue stress on its connections because of a pull on the cord is alleviated by a pillar, post, grip, tortuous path, or other effective means. Knotting of the flexible cord shall not be acceptable for this purpose.

3.7.2.9 *Aerial conductors*

3.7.2.9.1 *Joints and connections*

The following limitations and additional requirements apply to joints and connections in aerial conductors:

(a) Connections or joints in aerial conductors in tension shall be made without soldering.

(b) Connections to aerial conductors shall be reliable and adequately protected against the effects of movement, exposure to direct sunlight and entry of moisture, and shall be as short as practicable.

(c) Where conductors of dissimilar metals are joined, means shall be taken to prevent galvanic action by the use of appropriate connecting devices.

3.7.2.9.2 *Prohibited joints*

Joints shall not be made in the following types of cable, when in tension:

(a) Parallel-webbed or insulated twisted aerial cables.

(b) Neutral-screened cables.

(c) Multi-core cables.

(d) Conductors of different metals.

3.7.2.10 *Underground cables*

Connections in underground wiring shall be sealed to prevent the entry of moisture.

3.7.2.11 *Earthing conductors*

(a) *Soldered connections* Where soldering is used for the jointing or connection of earthing conductors, the earthing conductors shall be retained in position by acceptable means independently of the solder.

(b) *Tunnel-type connections* All screws that are in direct contact with conductors in tunnel-type terminals shall be of the type designed not to cut the conductor.

To maintain effective clamping of conductors, tunnel terminals shall be of a type having—

(i) two screws;

(ii) one screw with an outside diameter not less than 80% of the tunnel diameter; or

auto login of Electrical Workers Licensing Group is licenced to temporarily download this document.
Electrical Workers Licensing Group may print this document but not more than 10% of the documents subscribed to may be held in printed form at any one time.

Copyright Standards New Zealand

(iii) the conductor clamped by suitable ferrules or plates in direct contact with the conductor.

Exception: This requirement need not apply where one clamping screw, in direct contact with the conductor, is provided at the fixed terminals of electrical equipment, such as junction boxes, socket-outlets, and lampholders, provided that the screw is in direct contact with the conductor.

NOTE: Terminals in earth bars and links are required to comply with Clause 2.10.4.2.

3.7.3 Joints in cables

Joints in cables shall be enclosed, e.g. in a junction box, to provide adequate protection against relevant external influences.

Exception: Joints in cables need not be enclosed, provided that the joint—

(a) is not subjected to any undue strain;

(b) is made in accordance with the requirements of Clause 3.7.2;

(c) has any mechanical protection that was removed or damaged reinstated; and

(d) is insulated and sheathed to provide the equivalent of the original cable insulation and sheathing, including the requirements in Clause 3.10.1.2.

3.7.4 Installation couplers

An installation coupler, enclosed or unenclosed, complying with the requirements of AS/NZS 61535, is a suitable method for the electrical connection of cables, including flexible cords, flexible cables and rigid (solid or stranded) cables.

NOTES:

1 Installation couplers are intended for permanent connection between sections of wiring, particularly in ‘soft’ wiring systems, and are considered equivalent to a junction box.

2 Installation couplers require a deliberate act to disengage the latching mechanism and are not intended to be engaged or disconnected under load or to be used as socket-outlets.

3.8 IDENTIFICATION

3.8.1 General

Installation wiring conductors shall be clearly identified to indicate their intended function as active, neutral, earthing or equipotential bonding conductors.

Where identification is achieved using the colour of the conductor insulation, the colours specified in Table 3.4 shall be used.

auto login of Electrical Workers Licensing Group is licenced to temporarily download this document.
Electrical Workers Licensing Group may print this document but not more than 10% of the documents subscribed to may be held in printed form at any one time.

Copyright Standards New Zealand

Conductors with green, yellow or green/yellow combination coloured insulation or sheathing shall not be used as active or neutral conductors in installation wiring. In New Zealand, use of these colours is restricted for conductors but not for sheathing. NZ

Exception: The colour identification provisions of Table 3.4 need not apply to the special applications listed in Clause 3.8.3.

* In New Zealand, there is no restriction on sheathing colour. NZ

NOTES:

1 Internal wiring of equipment is not regarded as installation wiring but may be subject to particular equipment standards.

* 2 Switchboard wiring is not regarded as installation wiring but the AS/NZS 3439 series and AS/NZS 61439 series restrict the green/yellow combination to the identification of earthing conductors.

TABLE 3.4

CONDUCTOR COLOURS FOR INSTALLATION WIRING

Function	Insulation colour
Protective earth	Green/yellow
Equipotential bonding	Green/yellow
Neutral	Black or light blue
Active	Any colour other than green, yellow, green/yellow, black or light blue

NOTES:

1 When green/yellow is used, one colour shall cover not less than 30% and not more than 70% of the surface area, with the other colour covering the remainder of the surface.

2 Recommended colours for actives are—

(a) Red or brown for single-phase; or

(b) Red, white or blue for multiphase.

3 Where colours are used for the identification of cable cores, Australian and New Zealand cable identification colours and European cable identification colours shall not be combined within the same wiring enclosure or the same multi-core cable.

* 4 In New Zealand domestic installations, the only permitted colour for neutral conductors is black. NZ

3.8.2 Colour identification

3.8.2.1 *Colour identification by sleeving or other means*

Colour identification by sleeving or other means, using colours corresponding to those listed in Table 3.4 at each termination, may be used as a means of identification for the following purposes:

(a) Conductors with black or light blue insulation used as active conductors.

COPYRIGHT

Copyright Standards New Zealand

auto login of Electrical Workers Licensing Group is licenced to temporarily download this document.
Electrical Workers Licensing Group may print this document but not more than 10% of the documents subscribed to may be held in printed form at any one time.

or

(b) Conductors with other than green, yellow, green/yellow, black or light blue insulation used as neutral conductors.

or

(c) Conductors within multi-core cables with other than green, yellow or green/yellow insulation used as earthing conductors.

Colour identification shall be of colour-fast, non-conductive material that is compatible with the cable and its location.

Single-core cables with other than green, yellow or green/yellow insulation, used as earthing conductors, shall be identified continuously along their entire length.

Colour identification shall not be used at terminations or along the entire length, to identify a green, yellow or green/yellow colour-insulated conductor as an active or neutral conductor.

3.8.2.2 *Sleeving of existing earthing and bonding conductors*

* In electrical installations where earthing or bonding conductors have been previously installed using bare or green conductors, complying with previous editions of this Standard, such earthing or bonding conductors may remain.

* When alterations or repairs are carried out that result in new terminations or junctions to those existing bare or green conductors, such bare or green coloured conductors shall be sleeved with green/yellow sleeving within each of those new cable junctions or terminations.

3.8.2.3 *Sleeving of existing live conductors*

* In electrical installations where conductors with yellow insulation have been previously installed as live conductors, complying with previous editions of this Standard, such conductors with yellow insulation may remain.

* When alterations or repairs are carried out that result in new terminations or junctions to those existing live conductors with yellow insulation, such live conductors with yellow insulation shall be sleeved with white sleeving within each of those new cable junctions or terminations.

3.8.3 Exceptions and special applications

3.8.3.1 *General*

* *The colour identification provisions of Table 3.4 need not apply to the applications described in Clauses 3.8.3.2 to 3.8.3.5.*

3.8.3.2 *Protective earthing and equipotential conductors*

An earthing conductor need not be coloured green/yellow in the following situations:

(a) A bare or aerial conductor used as a protective earthing conductor.

COPYRIGHT

Copyright Standards New Zealand

auto login of Electrical Workers Licensing Group is licenced to temporarily download this document.
Electrical Workers Licensing Group may print this document but not more than 10% of the documents subscribed to may be held in printed form at any one time.

(b) Where a suitable screen of a multi-core cable is used as a protective earthing conductor, it shall be acceptable to identify the portion of the screen, from the point of separation of the cores to the conductor termination, as the earthing conductor.

NOTE: Clause 5.3.2.4 sets out insulation requirements for earthing conductors.

(c) An insulated protective earthing conductor is not normally manufactured in the green/yellow colour combination, e.g. silicon compounds.

* *(d) A multi-core cable that has a green earth.*

In such installations, sleeving should be used at terminations where it is otherwise not obvious that the conductor is being used for earthing purposes.

3.8.3.3 *Active and neutral conductors*

An active or neutral conductor need not be coloured in accordance with the colours specified in Table 3.4 where—

A2 *(a) insulated conductors within a multi-core cable, provided they are not yellow, have each core clearly identifiable by means of numbering, lettering or equivalent means; or*

* *(b) conductors of flexible cords and flexible cables, provided they are not yellow, are identified by alternative colours in accordance with Clause 3.8.3.4; or*

(c) the neutral conductor of an insulated aerial conductor is identified by multiple longitudinal ribs around the circumference and length that clearly distinguish it from the other conductors.

3.8.3.4 *Alternative and European cable identification colours*

Figure 3.1 demonstrates the coordination of conductor insulation colours of single-phase cables manufactured to current and superseded Australian and New Zealand Standards and typical European practices.

Figures 3.2 demonstrates the coordination of conductor insulation colours of multiphase cables manufactured to current Australian and New Zealand Standards and typical European practices.

NOTES:

1 Effective March 2006, British wiring practices were harmonized with Europe in relation to installation wiring and equipment wiring.

2 Care should be exercised when connecting imported equipment that does not use AS/NZS conductor colour codes. Detailed testing should be performed to verify the function and connection of wiring within the equipment.

Electrical Workers Licensing Group may print this document but not more than 10% of the documents subscribed to may be held in printed form at any one time.
auto login of Electrical Workers Licensing Group is licenced to temporarily download this document.

Copyright Standards New Zealand

SUPERSEDED AS/NZS FLEXIBLE CORDS	FUNCTION	EUROPEAN CABLES AND CURRENT AS/NZS FLEXIBLE CORDS, FLEXIBLE CABLES AND EQUIPMENT WIRING
Red	Active	Brown
Black	Neutral	Light blue
Green	Earth	Green/yellow

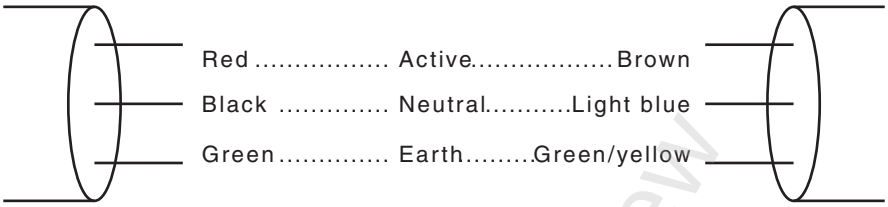

FIGURE 3.1 SINGLE-PHASE CABLES

CURRENT AS/NZS CABLES	FUNCTION	EUROPEAN CABLES
Red	Phase/Line 1	Brown
White	Phase/Line 2	Black
Blue	Phase/Line 3	Grey
Black	Neutral	Blue
Green/Yellow	Earth	Green/yellow

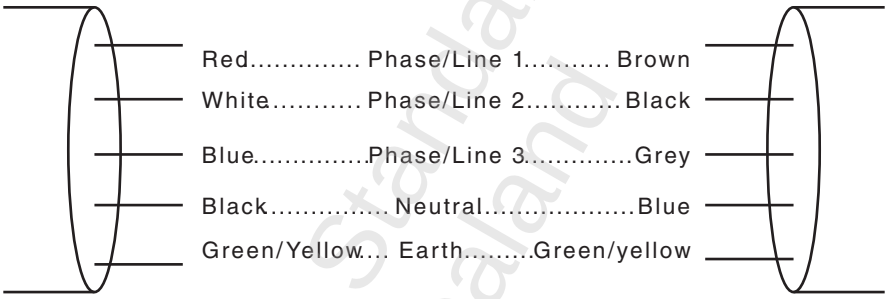

FIGURE 3.2 MULTIPHASE CABLES

NOTES TO FIGURES 3.1 AND 3.2:

1 The neutral core may or may not be included in multi-core cables and cords.

2 The alternative European active colour for multiphase flexible cords and cables on all phases is brown.

3.8.3.5 *Aerial earthing conductors*

Aerial earthing conductors shall be identified immediately adjacent to their termination at each end of the run either by the letter ‘E’ or by the earthing symbol ⏚.

3.9 INSTALLATION REQUIREMENTS

3.9.1 General

Wiring systems shall be installed in accordance with the generally accepted principles of safe and sound practice, using methods that will protect the electrical installation against mechanical or electrical failure under ordinary use, wear and tear, and any abnormal conditions that may reasonably be anticipated.

COPYRIGHT

Copyright Standards New Zealand

auto login of Electrical Workers Licensing Group is licenced to temporarily download this document.
Electrical Workers Licensing Group may print this document but not more than 10% of the documents subscribed to may be held in printed form at any one time.

3.9.2 Methods of installation

Installation methods for typical types of wiring systems are depicted in Table 3.1.

The effect of external influences at the installation shall be considered in accordance with Clause 3.3 and manufacturer's instructions.

Installation methods and wiring systems that are not depicted in Table 3.1 may be used provided that compliance is maintained with the general requirements of this Section.

3.9.3 Support and fixing

3.9.3.1 *General*

Wiring systems shall be supported by suitable means to comply with Clause 3.3.2.8.

Wiring systems shall be fixed in position by suitable clips, saddles or clamps or by means that will not damage the wiring system and that will not be affected by the wiring system material or any external influences.

For wiring systems installed in building elements, the positioning and size of openings and checks shall not reduce the structural strength of those building elements below the levels required by national building codes.

NOTES:

1 Limits for the size of openings and checks made in structural members are contained in national building codes.

2 In New Zealand, this information may also be found in NZS 3604. NZ

Where a wiring system consisting of sheathed cables is installed through metallic structural members, any aperture through which the cable passes shall be bushed or shaped to minimize abrasion of the cable. Where likely to be disturbed, the cable shall be fixed in position at a point adjacent to the aperture.

NOTE: Fixing of individual cores of a cable may be required where the risk of contact with conductive structural building materials exists (see Clause 5.4.6).

Exceptions:

1 Where a wiring system is resting on an immovable continuous surface, no further support is required.

2 Specific methods of fixing outlined in this Standard do not prohibit the use of alternative methods, provided that an equivalent degree of support and strength is maintained.

3.9.3.2 *Suspended ceilings*

The following conditions apply to the installation of wiring systems in suspended ceilings:

(a) Wiring systems may be supported by the suspended ceiling system unless this is not permitted by the suspended ceiling manufacturer.

COPYRIGHT

Copyright Standards New Zealand

auto login of Electrical Workers Licensing Group is licenced to temporarily download this document.
Electrical Workers Licensing Group may print this document but not more than 10% of the documents subscribed to may be held in printed form at any one time.

(b) Cables shall be provided with additional protection against mechanical damage where in contact with conductive ceiling support runners.

(c) Wiring systems installed above suspended ceilings shall be fixed at suitable intervals to prevent undue sagging of cables.

NOTES:

1 Suspended ceilings referred to in this Clause do not include timber systems to AS/NZS 2589.1 and timber building Standards.

2 National building codes may restrict the use of suspended ceilings to support services.

3.9.3.3 *Wiring systems likely to be disturbed*

3.9.3.3.1 *Location*

Wiring systems installed in the following locations are deemed likely to be disturbed:

(a) On the surface of a wall or on the underside of a ceiling or roof.

(b) In a space between a floor and the ground to which a person may gain entry.

(c) In parts of a ceiling space where access is greater than 0.6 m in height.

(d) Within 2.0 m of any access to any space to which a person may gain entry.

(e) Below raised floors.

3.9.3.3.2 *Support and protection*

Wiring systems installed in positions where they are likely to be disturbed shall be—

(a) supported at suitable intervals to prevent the undue sagging of cables; and

* (b) supported to prevent accidental withdrawal of cables from electrical equipment exposing single-insulated conductors; and

(c) protected from mechanical damage as specified in Clause 3.3.2.6.

* RCDs shall not be used in lieu of mechanical protection for wiring systems that are likely to be disturbed.

3.9.4 Protection against mechanical damage

3.9.4.1 *General*

Wiring systems installed in positions where they may reasonably be expected to be subject to mechanical damage shall be adequately protected in accordance with Clause 3.3.2.6 and the applicable requirements of Clauses 3.9.4.2 to 3.9.4.4.

* NOTE: Guide to adequacy and WS classification is provided in Appendix H.

COPYRIGHT

Copyright Standards New Zealand

auto login of Electrical Workers Licensing Group is licenced to temporarily download this document.
Electrical Workers Licensing Group may print this document but not more than 10% of the documents subscribed to may be held in printed form at any one time.

3.9.4.2 *Wiring systems near building surfaces*

* Wiring systems that are fixed in position by fasteners, or held in position by thermal insulation, or by passing through an opening in a structural member, shall be protected by one of the methods outlined in Clause 3.9.4.4 if they are concealed within 50 mm from the surface of a wall, floor, ceiling or roof.

Exception: This requirement need not apply to wiring systems that can move freely to a point not less than 50 mm from the surface in the event of a nail or screw penetrating the cavity at the location of the wiring system.

Figures 3.3, 3.4 and 3.5 provide examples of protection of wiring systems near building surfaces.

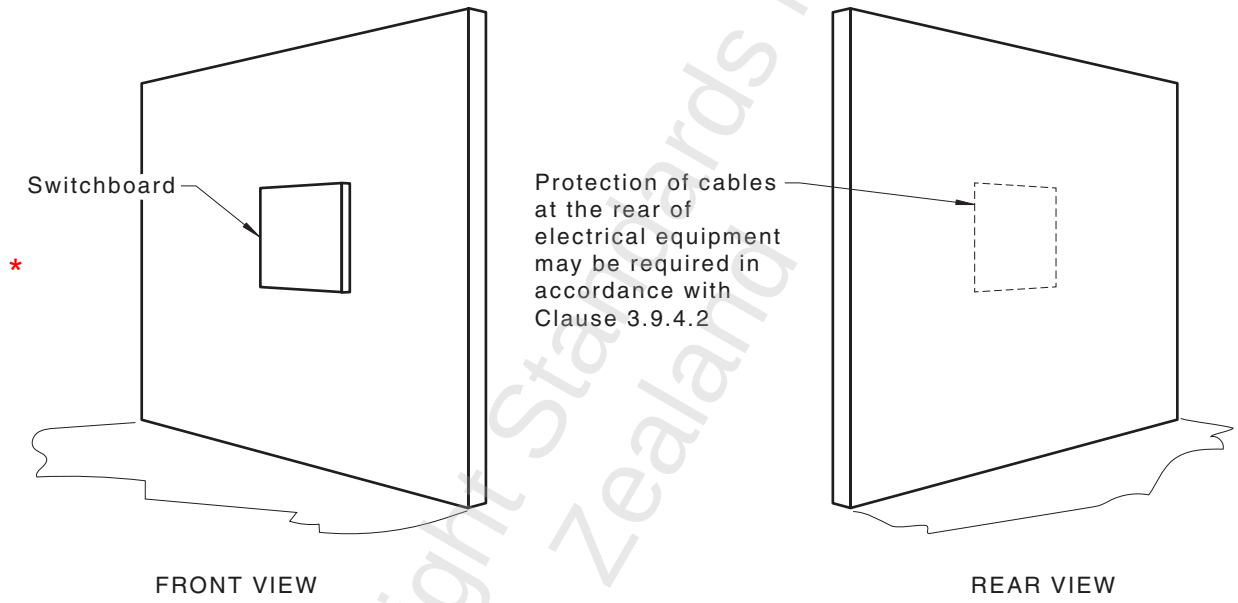

FIGURE 3.3 PROTECTION OF WIRING SYSTEMS WITHIN SOLID OR FRAMED WALLS

Copyright Standards New Zealand

auto login of Electrical Workers Licensing Group is licenced to temporarily download this document.
Electrical Workers Licensing Group may print this document but not more than 10% of the documents subscribed to may be held in printed form at any one time.

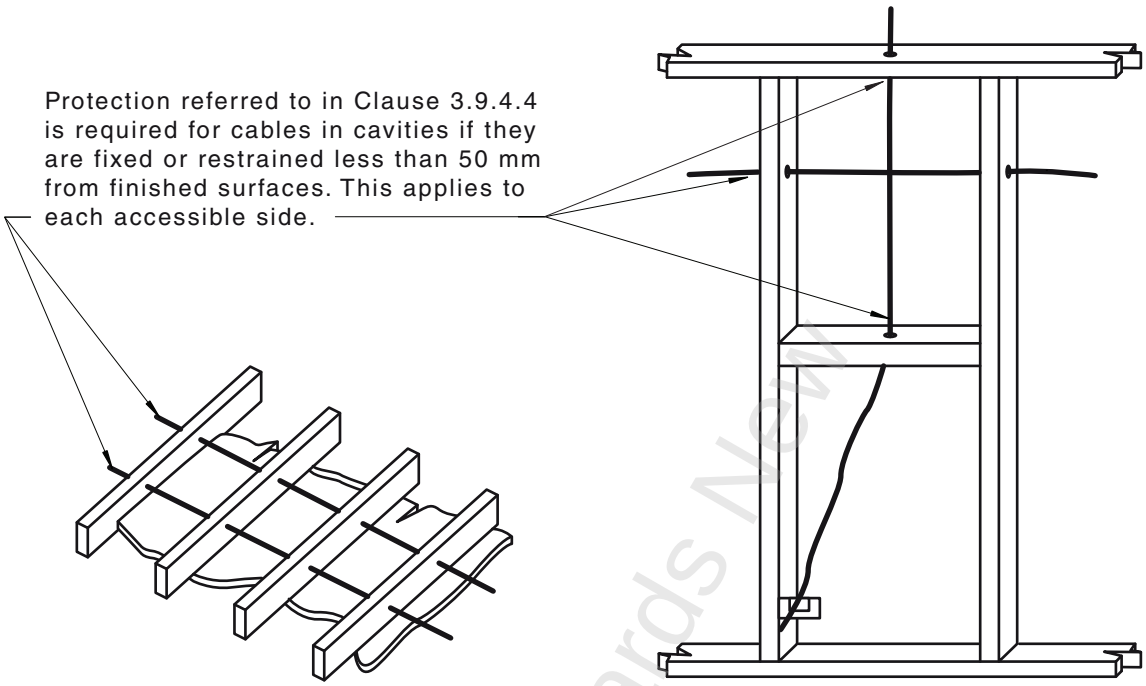

FIGURE 3.4 PROTECTION OF WIRING SYSTEMS WITHIN CEILINGS, FLOORS AND WALL SPACES

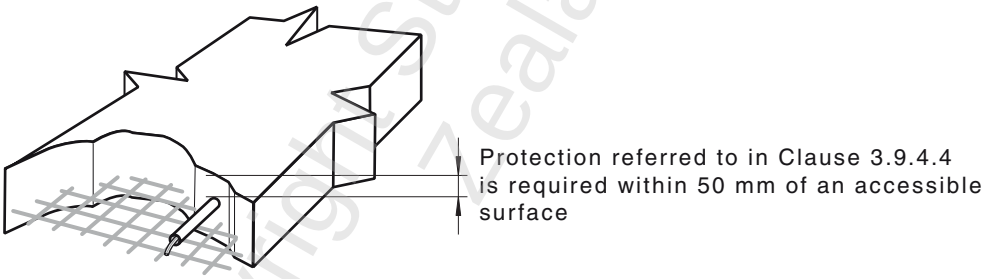

FIGURE 3.5 PROTECTION OF WIRING SYSTEMS WITHIN CONCRETE ROOFS, CEILINGS OR FLOORS

3.9.4.3 *Wiring systems under wall lining or roofing material*

3.9.4.3.1 *Prohibited locations*

Wiring systems shall not be installed through any space formed between roofing or wall-lining material and its immediate supporting member (see Figure 3.6).

NOTE: Examples of these situations include those between tile battens and roofing tiles or between corrugated (or other profile) sheeting of a wall or roof and its supporting members. Examples are shown in Figures 3.6 and 3.7.

Copyright Standards New Zealand

auto login of Electrical Workers Licensing Group is licenced to temporarily download this document.
Electrical Workers Licensing Group may print this document but not more than 10% of the documents subscribed to may be held in printed form at any one time.

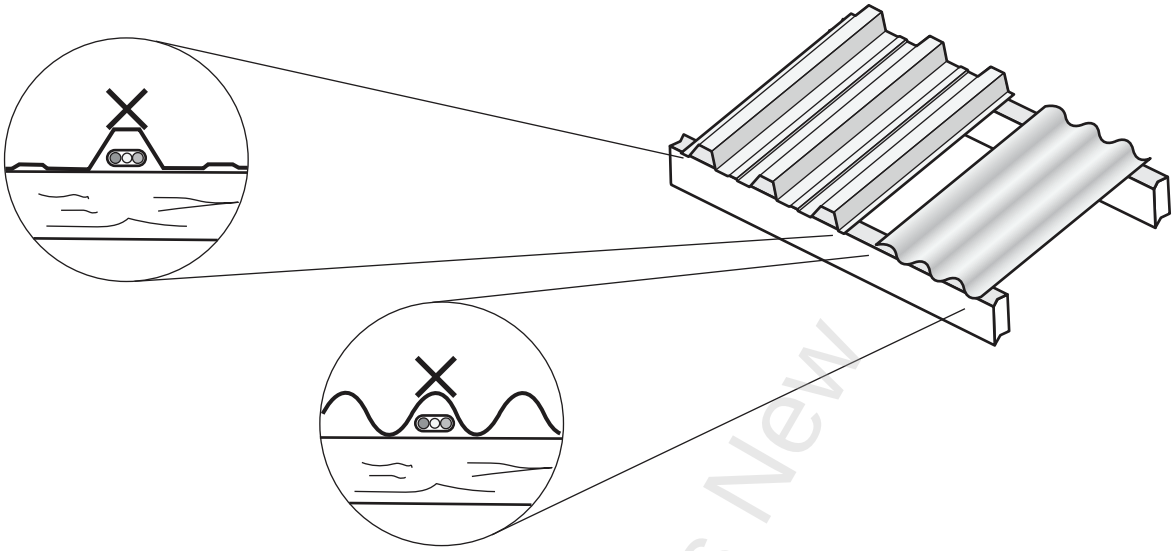

FIGURE 3.6 PROHIBITED WIRING SYSTEM LOCATION—
ROOF OR WALL-LINING MATERIALS

3.9.4.3.2 *Protection required*

Wiring systems shall be protected by one of the methods outlined in Clause 3.9.4.4 if they pass through a structural member, or are fixed in position, within 50 mm from the face of the supporting member to which the lining or roofing material is attached (see Figure 3.7).

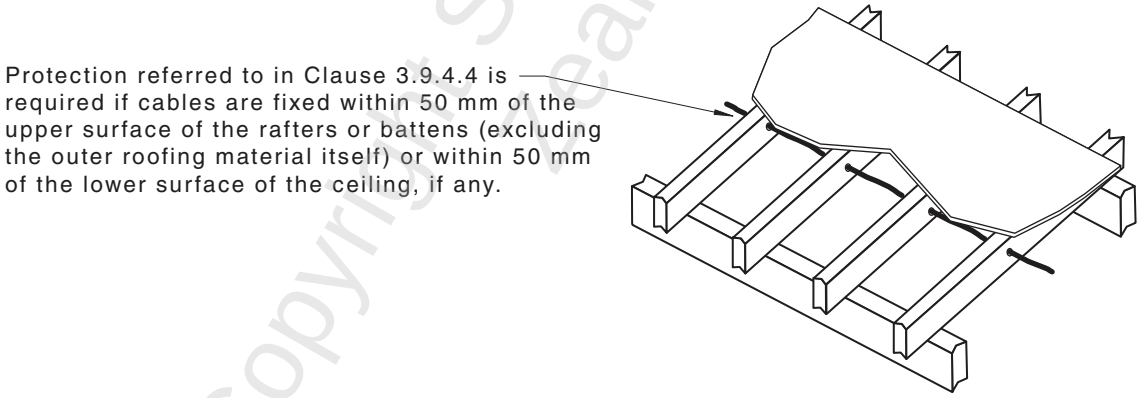

FIGURE 3.7 PROTECTION OF WIRING SYSTEM
BELOW ROOFING MATERIAL

3.9.4.4 *Protection methods*

Where protection of a wiring system is required, in accordance with Clauses 3.9.4.2 and 3.9.4.3.2, the wiring system shall be—

* (a) provided with adequate mechanical protection at a minimum of WSX3 to prevent damage (refer to Paragraph H5.4, Appendix H); or

COPYRIGHT

Copyright Standards New Zealand

auto login of Electrical Workers Licensing Group is licenced to temporarily download this document.
Electrical Workers Licensing Group may print this document but not more than 10% of the documents subscribed to may be held in printed form at any one time.

* (b) provided with an earthed metallic armouring, screen, covering or enclosure, to operate a short circuit protective device under fault conditions; or

(c) protected by an RCD with a maximum rated operating residual current of 30 mA.

* NOTE: Where conductive mechanical protection is installed to meet the requirements of 3.9.4.4(a), for the protection of double insulated conductors, earthing of the conductive mechanical protection need not be provided.

3.9.5 Wiring systems installed vertically

Where wiring systems are installed vertically, they shall be installed in accordance with the requirements of Clauses 3.9.2 and 3.9.3 and in such a manner as to avoid damage to any part of the wiring system that may be caused by its own weight or method of support or fixing.

Adequate provision shall be made for the support of cables enclosed in a wiring enclosure installed vertically. Cable supports shall be provided at intervals not exceeding 8 m or as recommended by the cable manufacturer.

3.9.6 Change of direction

Where wiring systems change direction, the following requirements apply:

(a) Bends shall not cause damage, or place undue stress on their sheathing, insulation or terminations.

(b) The bending radius recommended by the cable manufacturer shall be observed.

Where manufacturer's information is not available, the following minimum internal radii may be considered suitable:

(i) Unarmoured sheathed cables..... 6 times the cable diameter.

or

(ii) Armoured sheathed cables..... 12 times the cable diameter.

(c) Supports in contact with cables under pressure from changes in direction shall not have sharp edges.

Exception: These requirements need not apply where the cable has been otherwise protected at the pressure point.

3.9.7 Particular installation requirements

3.9.7.1 *Consumer mains*

3.9.7.1.1 *Protected*

* Consumer mains protected on the supply side by a short-circuit protective device shall comply with the installation requirements of this Section relevant to the type of wiring system.

NOTE: The electricity distributor's service protective device(s) may provide short-circuit protection.

COPYRIGHT

auto login of Electrical Workers Licensing Group is licenced to temporarily download this document.
Electrical Workers Licensing Group may print this document but not more than 10% of the documents subscribed to may be held in printed form at any one time.

Copyright Standards New Zealand

3.9.7.1.2 *Unprotected*

Insulated, unsheathed cables enclosed in conductive wiring enclosures shall not be installed without short-circuit protection.

NOTE: Sheathing of cables is not required within conductive switchboard surrounds.

* Consumer mains not provided with short-circuit protection on the supply side, shall comply with the installation requirements of this Section relevant to the type of wiring system and shall be—

(a) constructed in such a manner as to reduce the risk of short-circuit to a minimum; and

(b) installed in accordance with the relevant additional requirements of the electricity distributor.

The following wiring systems are deemed to reduce the risk of short-circuit to a minimum:

(i) Insulated and sheathed cables enclosed in heavy-duty insulating conduit in accordance with either the AS/NZS 2053 series or the AS/NZS 61386 series.

(ii) Insulated and sheathed cables installed in underground wiring enclosures.

(iii) Aerial conductors consisting of XLPE cables type X-90UV in accordance with the AS/NZS 3560 series.

(iv) Busways and busbar systems, including joints and switchboard busbars, having insulation up to the first protective device in accordance with the AS/NZS 3439 series or the AS/NZS 61439 series.

3.9.7.2 *Insulated and sheathed cables*

The following applies to insulated and sheathed cables:

(a) *Armoured sheathed cables* Armoured sheathed cables may be installed in concrete, plaster or cement render without protection of a wiring enclosure.

(b) *Unarmoured sheathed cables*:

(i) *In concrete* Unarmoured sheathed cables installed in concrete shall be contained within an appropriate wiring enclosure installed in accordance with Clauses 3.3.2.6 and 3.9.4.

(ii) *In plaster or cement render* Unarmoured sheathed cables may be installed in plaster or cement render without protection of a wiring enclosure, provided that the cables are installed and protected in accordance with Clauses 3.3.2.6 and 3.9.4.

auto login of Electrical Workers Licensing Group is licenced to temporarily download this document.
Electrical Workers Licensing Group may print this document but not more than 10% of the documents subscribed to may be held in printed form at any one time.

Copyright Standards New Zealand

auto login of Electrical Workers Licensing Group is licenced to temporarily download this document.
Electrical Workers Licensing Group may print this document but not more than 10% of the documents subscribed to may be held in printed form at any one time.

3.9.7.3 *Mineral insulated metal sheathed (MIMS) cable*

MIMS cable shall comply with the following:

(a) *Protection against corrosion* The type of MIMS cable shall be selected to suit the environmental conditions it is installed in where the cable is—

(i) buried in concrete or plaster containing corrosive agents;

(ii) installed underground, in accordance with Clause 3.11; or

(iii) in other locations where corrosion is likely to occur.

(b) *Protection against vibration* Movement caused by vibration shall be provided for by introducing a loop in the cable immediately before the termination.

The size of the loop shall be determined by the cable size and severity of the vibration.

(c) *Support and fixing* MIMS cable shall be supported and, if necessary, fixed in position so as to provide adequate protection against damage.

The supports and fixings shall be suitable for use at the highest temperature attained by the cable according to the circumstances of its use.

NOTE: See Clause 4.2.2.3 for requirements concerning the effect of elevated temperatures on adjacent materials.

3.9.7.4 *Flexible cords used as installation wiring*

Flexible cords used as installation wiring shall be of the heavy-duty sheathed type and installed in the same manner as insulated and sheathed cables.

Exception: Flexible cords need not be of the heavy-duty type if—

(a) used for the connection of pendant socket-outlets;

(b) installed in a suitable wiring enclosure; or

NOTE: See Clause 3.10.1 for requirements for enclosure of cables.

(c) installed for the connection of equipment, in accordance with the equipment wiring provisions of Clause 4.3.

Flexible cords installed as follows shall be regarded as installation wiring and shall comply with this Clause (3.9.7.4):

(a) Permanently connected flexible cords, including flexible cords used as pendants for socket-outlets and those connected to an installation coupler.

(b) Flexible cords not open to view.

COPYRIGHT

Exceptions:

1 *Flexible cords used as pendants for lamps, luminaires or provided with, and permanently connected to, an appliance shall not be regarded as installation wiring.*

2 *Flexible cords installed for the connection of a single appliance or luminaire shall not be regarded as installation wiring, provided that they—*

- *do not exceed 2.5 m in length; and*
- *have a current-carrying capacity of not less than—*
  - *the current rating or setting of the circuit protective device; or*
  - *the actual load of the appliance or luminaire, subject to the minimum cross-sectional area of any conductor being not less than 0.75 mm^2.*

3.9.7.5 *Low voltage track systems*

(a) *Open to view* A low voltage track system shall be installed so that the complete system is open to view throughout its entire length but not necessarily from one position.

(b) *Position* Track systems shall be installed so that the entry of dust or contamination is minimized.

(c) *Supports* The supports for a suspended track system shall be—

(i) of appropriate design;

(ii) spaced at intervals not more than 1.5 m apart or as permitted in manufacturer's installation instructions; and

(iii) arranged so that the system is held securely in position without sagging or undue stress.

3.9.7.6 *Under-carpet wiring systems*

(a) *Position* An under-carpet wiring system shall be installed only as a floor-mounted arrangement under carpet tiles of a size not greater than 1 m × 1 m.

(b) *Method of installation* The under-carpet wiring system shall be installed as a total system, using specified component parts and installation tools, in accordance with the manufacturer's instructions.

Under-carpet wiring systems of differing configurations shall not be interconnected, e.g. to ensure that there is no interconnection between a five-core and a three-core system, the five-core system shall only be connected to a dedicated circuit.

Exception: Where manufacturer's instructions permit such interconnection, this requirement need not apply.

COPYRIGHT

Copyright Standards New Zealand

auto login of Electrical Workers Licensing Group is licenced to temporarily download this document.
Electrical Workers Licensing Group may print this document but not more than 10% of the documents subscribed to may be held in printed form at any one time.

3.9.8 Prevention of mutual detrimental effects between services

3.9.8.1 *General*

Wiring systems shall be selected and installed in accordance with Clauses 3.9.8.2 to 3.9.8.4 so as to avoid any detrimental effects arising from the installation and use of the wiring systems in the following situations:

(a) Between different electrical installations.

(b) Between different parts of the same electrical installation.

(c) Between circuits of an electrical installation operating at different voltages, such as extra-low voltage and low voltage.

(d) Between circuits of an electrical installation supplying different safety services.

(e) Between safety services and the remainder of the electrical installation.

NOTE: The regulations for safety services provide requirements for the segregation of such wiring systems from other wiring systems.

(f) Between electrical installations and non-electrical installations, such as gas and water supply.

(g) Between electrical installations and telecommunications and data cable installations.

3.9.8.2 *Different electrical installations*

* **3.9.8.2.1** *Common enclosure/cable*

Conductors for the following applications shall not be installed within the same pipe, tube, conduit or the same multi-core cable:

(a) Conductors that form part of different electrical installations.

or

* (b) Conductors that form part of individual occupancies of single or multiple electrical installations.

A1 *Exception: These requirements need not apply to switchboards at which circuits are terminated.*

NOTE: For the purposes of this Clause, wiring enclosures such as cable trays, with removable covers or with no covers at all, where the cables can be accessed without cutting or destroying the enclosure, are not considered to be pipes, tubes or conduits.

3.9.8.2.2 *Segregation*

* Where conductors for different electrical installations, or for individual occupancies forming part of single or multiple electrical installations are installed in a common enclosure, they shall be effectively segregated from each other within that enclosure.

COPYRIGHT

Electrical Workers Licensing Group may print this document but not more than 10% of the documents subscribed to may be held in printed form at any one time.
auto login of Electrical Workers Licensing Group is licenced to temporarily download this document.

Copyright Standards New Zealand

Effective segregation may be achieved by the use of independently sheathed cables, barriers of fire-resisting material or by distance (minimum 50 mm).

Exception: This requirement need not apply to switchboards at which such circuits originate or terminate.

3.9.8.3 *Segregation of different voltage levels*

Cables of high voltage circuits and cables of low or extra-low voltage circuits shall not be enclosed in the same wiring system.

Cables of low voltage circuits and cables of extra-low voltage circuits shall only be enclosed in the same wiring system where one of the following arrangements is employed:

(a) The low voltage cables are of a type providing the equivalent of double insulation.

(b) All cables or each conductor of a multi-core cable are insulated for the highest voltage present.

(c) The low voltage cables are installed in a separate compartment of a common cable trunking system having fixed and continuous barriers between compartments.

3.9.8.4 *Proximity to non-electrical services*

(a) *General* The following conditions shall be satisfied when installing electrical services:

(i) Wiring systems shall not be installed in the vicinity of services that produce heat, smoke or fumes likely to be detrimental to the wiring system.

Exception: Wiring systems may be installed in such locations where the wiring system is protected from harmful effects by shielding that does not affect the dissipation of heat from the wiring system.

(ii) Where a wiring system is situated below services liable to cause condensation (such as water, steam or gas services), precautions shall be taken to protect the wiring system from harmful effects.

(iii) Where electrical services are installed close to non-electrical services, they shall be so arranged that any reasonably foreseeable routine operation carried out on the other services will not cause damage to the electrical services.

NOTE: This may be achieved by suitable spacing between the services or the use of mechanical or thermal shielding.

(iv) Wiring systems shall be suitably protected against the hazards likely to arise from the presence of other services in normal use.

auto login of Electrical Workers Licensing Group is licenced to temporarily download this document.
Electrical Workers Licensing Group may print this document but not more than 10% of the documents subscribed to may be held in printed form at any one time.

Copyright Standards New Zealand

(v) Cables without sheathing or further enclosure shall not be installed in enclosures where they are accessible to personal contact or where they may contact other services, such as water, gas, hydraulic or communications systems.

NOTE: Metal parts of other services may require bonding to the earthing system in order to provide protection against earth faults, in accordance with Clause 5.6.2.3.

(b) *Gas and water services* Requirements for the separation of distributed gas and water systems from low voltage wiring systems are provided in the AS/NZS 5601 series for gas services and the AS/NZS 3500 series for water services.

Wiring systems shall maintain a separation of not less than 25 mm from any above-ground gas or water piping. Separation from underground gas and water services shall be in accordance with Clause 3.11.5.

Exception: This requirement does not apply to the following:

1 An equipotential bonding conductor connected to the piping, in accordance with this or another Standard.

2 Heat trace cabling.

(c) *Telecommunication services* Requirements for the separation of telecommunications cables from low voltage and high voltage systems are provided—

(i) for Australia, in AS/CA S009; and **A**

(ii) for New Zealand in the NZ Telecommunications Forum (TCF) Premises Wiring Guidelines. **NZ**

Separation from telecommunications services shall be as shown in Figures 3.8 and 3.9.

NOTE: The documents listed in Item (c) contain distances and other measures for the separation of telecommunications cables from low voltage cables as follows:

(a) On surfaces or concealed in walls, floors or ceilings, such as depicted in Figure 3.8.

(b) Cables in common ducting.

(c) In underground trenches, such as depicted in Figure 3.9.

(d) Under-carpet wiring.

(e) Aerial cables.

auto login of Electrical Workers Licensing Group is licenced to temporarily download this document.
Electrical Workers Licensing Group may print this document but not more than 10% of the documents subscribed to may be held in printed form at any one time.

Copyright Standards New Zealand

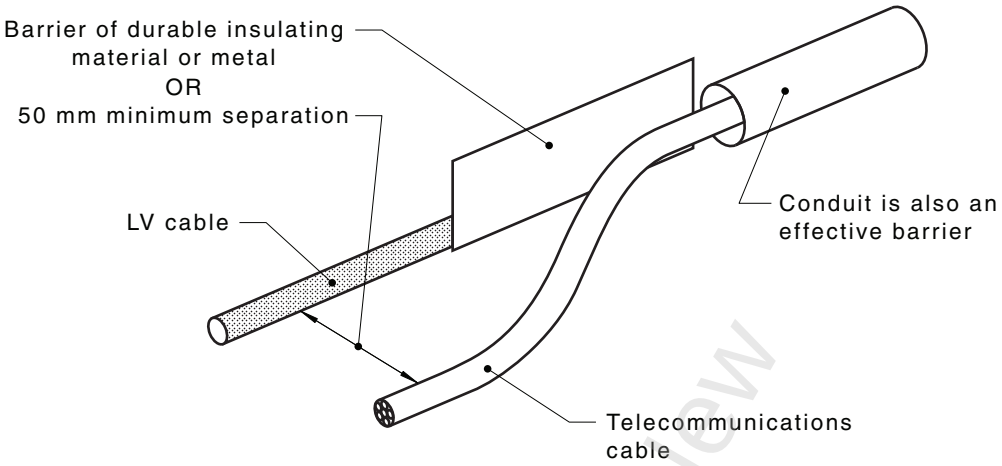

FIGURE 3.8 SEPARATION OF LOW VOLTAGE CABLES FROM TELECOMMUNICATIONS CABLES ON SURFACES OR CONCEALED IN WALLS, FLOORS OR CEILINGS

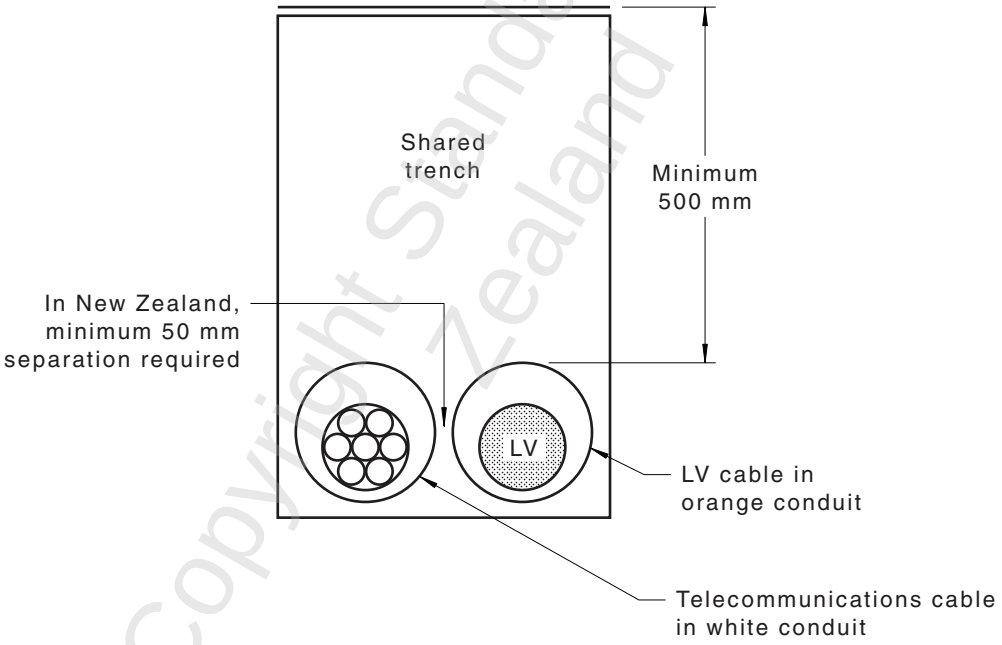

FIGURE 3.9 SEPARATION OF LOW VOLTAGE CABLES FROM TELECOMMUNICATIONS CABLES IN UNDERGROUND TRENCHES

3.9.9 Selection and installation to minimize the spread of fire

3.9.9.1 *General*

(a) Precautions shall be taken to minimize the spread of fire by the selection of appropriate materials and installation methods.

COPYRIGHT

Copyright Standards New Zealand

auto login of Electrical Workers Licensing Group is licenced to temporarily download this document.
Electrical Workers Licensing Group may print this document but not more than 10% of the documents subscribed to may be held in printed form at any one time.

(b) Wherever electrical equipment contains flammable liquid in significant quantity, precautions shall be taken to prevent burning liquid and the products of combustion of the liquid (flame, smoke, toxic gases) spreading to other parts of the building.

NOTES:

1 Examples of such precautions are—

(a) a drainage pit to collect leakages of liquid and ensure their extinction in the event of fire; or

(b) installation of the equipment in a chamber of adequate fire-rating and the provision of sills or other means of preventing burning liquid spreading to other parts of the building, such a chamber being ventilated solely to the external atmosphere.

2 The generally accepted lower limit for a significant quantity is 25 L.

(c) In structures of shape and dimensions that facilitate the spread of fire, precautions shall be taken to ensure that the electrical installation cannot propagate a fire, e.g. chimney effect.

NOTE: Fire detectors may be provided that ensure the implementation of measures for preventing propagation of fire, e.g. the closing of fireproof shutters in ducts, troughs or trunking.

3.9.9.2 *Precautions*

(a) The risk of spread of fire shall be minimized by the selection of appropriate materials and installation.

(b) Wiring systems shall be installed so that the general building structural performance and fire safety are not reduced.

(c) Cables and products having the necessary fire-rating for wiring systems, in accordance with AS/NZS 3013, may be installed without special precautions.

(d) Cables not having the necessary fire-rating for wiring systems shall be limited to short lengths for connection of appliances to permanent wiring systems and shall not pass from one fire-segregated compartment to another.

3.9.9.3 *Penetration of fire barriers*

(a) Where a wiring system passes through elements of building construction, such as floors, walls, roofs, ceilings, partitions or cavity barriers that are required to be fire-rated—

(i) the opening shall be close-fitting to the wiring system and at least 50 mm from any other service opening;

(ii) the cross-sectional area of the opening shall be not greater than 500 mm^2, i.e. if circular, 25 mm diameter; and

Electrical Workers Licensing Group is licenced to temporarily download this document.
auto login of Electrical Workers Licensing Group may print this document but not more than 10% of the documents subscribed to may be held in printed form at any one time.

Copyright Standards New Zealand

Exception: The cross-sectional area of the opening may be increased up to a maximum of 2000 mm^2 (50 mm diameter) for a single cable that leaves a gap of not more than 15 mm between the cable and the opening.

(iii) the fire-rating of structures shall be reinstated where openings remain after passage of the wiring system, in accordance with the relevant provisions of national building codes.

NOTE: Guidance on materials suitable for restoring fire-rated constructions is given in national building codes.

(b) Wiring systems, such as conduits, cable ducting, cable trunking, busbars or busbar trunking systems, and flush boxes that penetrate elements of building construction required to have a specified fire-rating shall be internally sealed to the degree of fire-rating of the respective element before penetration and externally sealed as required by Item (a)(iii).

(c) Conduit and trunking systems of material complying with the flame propagation test of AS/NZS 2053 series or AS/NZS 61386 series or AS/NZS 4296, as appropriate, and having a maximum internal cross-sectioned area of 710 mm^2, i.e. 30 mm internal diameter, need not be internally sealed provided that—

(i) the system satisfies the degree of protection IP33; and

(ii) any termination of the system in one of the compartments separated by the building construction being penetrated satisfies the degree of protection IP33.

(d) All sealing arrangements used in accordance with Items (a) to (c) shall comply with the following requirements.

Sealing arrangements shall—

(i) be compatible with the materials of the wiring system with which they are in contact;

(ii) permit thermal movement of the wiring system without reduction of the sealing quality; and

(iii) be of adequate mechanical stability to withstand the stresses that may arise through damage to the support of the wiring system because of fire.

NOTE: This requirement may be satisfied if—

(a) either cable clamps or cable supports are installed within 750 mm of the seal, and are able to withstand the mechanical loads expected following the collapse of the supports on the fire side of the seal to the extent that no strain is transferred to the seal; or

(b) the design of the sealing system provides adequate support.

auto login of Electrical Workers Licensing Group is licenced to temporarily download this document.
Electrical Workers Licensing Group may print this document but not more than 10% of the documents subscribed to may be held in printed form at any one time.

Copyright Standards New Zealand

(e) Sealing arrangements intended to satisfy Items (a) and (b) above shall resist external influences to the same degree as the wiring system with which they are used and, in addition, shall meet the following requirements:

(i) They shall be resistant to the products of combustion to the same extent as the elements of building construction that have been penetrated.

(ii) They shall provide the same degree of protection from water penetration as that required for the building construction element in which they have been installed.

(iii) The seal and the wiring system shall be protected from dripping water that may travel along the wiring system, or that may otherwise collect around the seal, unless the materials used in the seal are all resistant to moisture when finally assembled for use.

NOTE: Materials and installation methods used for sealing will require the use of certified sealing products and installation methods.

3.9.10 Limitation of circulating and eddy currents

3.9.10.1 *General*

Precautions shall be taken to limit circulating and eddy currents.

3.9.10.2 *Cables for a.c. circuits—Electromagnetic effects*

Single-core cables armoured with steel wire or tape shall not be used for a.c. circuits.

Conductors of a.c. circuits installed in ferromagnetic enclosures shall be arranged so that the conductors of all phases and the neutral conductor (if any) and the appropriate protective earthing conductor of each circuit are contained in the same enclosure.

Where such conductors enter a ferrous enclosure they shall be—

(a) arranged so that the conductors are not individually surrounded by a ferrous material; or

(b) provided with other means of limiting any excessive heating effects of eddy (induced) currents.

NOTES:

1 Particular care needs to be taken where single-core cables carrying current in excess of 300 A pass through ferrous metal wall lining, switchboard surrounds, or similar ferrous enclosures.

2 The use of non-ferrous enclosures or gland plates or, where suitable, providing an air gap by slotting between individual core entries to break the magnetic circuit may be applied to eliminate this effect. A slot between individual core entries with a width of 20% of the individual core entries diameter is considered satisfactory.

COPYRIGHT

Copyright Standards New Zealand

auto login of Electrical Workers Licensing Group is licenced to temporarily download this document.
Electrical Workers Licensing Group may print this document but not more than 10% of the documents subscribed to may be held in printed form at any one time.

3.9.10.3 *Cables with non-ferrous metal sheathing*

Single-core cables enclosed in lead, copper, aluminium or other non-ferrous metal sheathing shall be used for alternating currents only where one of the following arrangements is employed:

(a) *Trefoil formation*:

(i) The cables shall be run in trefoil formation throughout their entire length.

Exception: A distance not exceeding two metres at each end to facilitate termination of the cables is permitted.

(ii) The sheaths of the cables shall be bonded at the point where the trefoil formation ceases, or at the switchboard termination, and the conductivity of the bonding conductor shall be not less than that of the cable sheath.

(b) *Other than trefoil formation*:

(i) The cables shall be placed as near as practicable to each other (they may be touching).

(ii) The sheathing of the cables shall be bonded at both ends and at intervals not exceeding 30 m along the cable run. The conductivity of the bonding conductor shall be not less than that of the cable sheath.

Exception: Where the sheathing of cables is provided by a serving, the bonding need only be carried out at both ends.

* **3.9.11 Minimization of electromagnetic interference**

Certain types of electrical installations, e.g. those containing sensitive electronic equipment or systems, may require minimization of electromagnetic interference arising from magnetic fields developed from current flowing in cables. This may be addressed by—

(a) selection of cables designed for low magnetic field emissions;

(b) installation of cables in enclosures that contain or shield magnetic fields; or

(c) installation of cables in configurations that produce low magnetic fields.

NOTE: The AS/NZS 3008.1 series details circuit configurations for the installation of parallel single-core cables in groups that produce reduced levels of magnetic field in comparison with other electrically symmetrical configurations.

auto login of Electrical Workers Licensing Group is licenced to temporarily download this document.
Electrical Workers Licensing Group may print this document but not more than 10% of the documents subscribed to may be held in printed form at any one time.

Copyright Standards New Zealand

3.10 ENCLOSURE OF CABLES

3.10.1 General

3.10.1.1 *Insulated, unsheathed cables*

Insulated, unsheathed cables shall be enclosed in a wiring enclosure throughout their entire length.

Exceptions: Wiring enclosures need not be provided for insulated, unsheathed cables installed as follows:

1 *As aerial conductors, in accordance with Clause 3.12.*

2 *In an enclosed wall cavity between an accessory and a wiring enclosure or sheathing terminated within 100 mm of the hole over or within which the accessory is mounted.*

NOTE: This exception does not apply within a roof space.

3 *Within switchboards, metering and similar enclosures, provided that such cables are not exposed to touch during normal switching or meter-reading operations.*

4 *As earthing or equipotential bonding conductors installed in accordance with Section 5.*

5 *As an extra-low voltage circuit, in accordance with Clause 7.5.*

3.10.1.2 *Insulated and sheathed cables*

Cables of a sheathed type need not be installed in a wiring enclosure.

Exception: Cables having insulation or sheath that does not meet the combustion propagation requirements of the AS/NZS 5000 series, e.g. polyethylene-insulated unsheathed cables, shall be installed in fire-rated enclosures.

Where the sheath of a cable is removed, the exposed cores of the cable shall be enclosed in accordance with Clause 3.10.1.1.

3.10.2 Wiring enclosures

3.10.2.1 *Types*

The following types of wiring enclosures may be used for the protection of cables requiring enclosure as specified in Clause 3.10.1:

* (a) Conduits in accordance with AS/NZS 2053 series or the AS/NZS 61386 series, including—

(i) steel conduits or other metal tubing or conduit;

(ii) flexible metal conduit;

(iii) rigid and flexible insulating conduit; and

(iv) corrugated insulating conduit.

* NOTE: Refer to Appendix N for information on compatibility of conduit classifications in the AS/NZS 2053 series and AS/NZS 61386 series.

COPYRIGHT

auto login of Electrical Workers Licensing Group is licenced to temporarily download this document.
Electrical Workers Licensing Group may print this document but not more than 10% of the documents subscribed to may be held in printed form at any one time.

Copyright Standards New Zealand

(b) Cable trunking systems in accordance with AS/NZS 4296, with or without compound filling.

(c) Other wiring enclosures providing mechanical protection at least equivalent to those listed in Items (a) and (b).

Covers of wiring enclosures containing unsheathed cables shall be effectively retained in position and, where installed in a readily accessible position, shall not be removable without the use of tools.

3.10.2.2 *Change of wiring enclosures*

Any change from one type of wiring enclosure to another shall be made—

(a) at a switchboard; or

(b) by means of a suitable device that provides for the complete protection of the conductor insulation and for continuity of conductive wiring enclosures.

3.10.2.3 *Entry of water*

Wiring enclosures shall be—

(a) installed in a manner that will prevent water from entering electrical equipment and enclosures; and

(b) where exposed to the weather, provided with adequate means to prevent the entry of rain.

NOTE: The relationship between the height of each end of a wiring enclosure and the risk of entry of water should be considered, e.g. a conduit installed on a hill from an underground connection pit to a switchboard enclosure that is much lower than the connection pit.

3.10.3 Installation of wiring enclosures

3.10.3.1 *General*

Wiring enclosures shall be installed in accordance with safe and sound practice and provide adequate protection as required by Clauses 3.3 and 3.10.3.2 to 3.10.3.9.

* Wiring enclosures installed on roofing material shall not be installed in a manner that—

(a) obstructs the natural water drain paths; or

(b) promotes the accumulation of debris.

This may be achieved by—

* (i) installing the enclosure across the roofing material profile; or

* (ii) installing the enclosure within the valley or tray of the roofing material using supports that prevent the obstruction or water or accumulation of debris, e.g. standoff brackets or blocks.

Copyright Standards New Zealand

auto login of Electrical Workers Licensing Group is licenced to temporarily download this document.
Electrical Workers Licensing Group may print this document but not more than 10% of the documents subscribed to may be held in printed form at any one time.

3.10.3.2 *Support*

Wiring enclosures shall be supported by suitable means to prevent damage to the enclosure or any associated cables.

3.10.3.3 *Continuity*

Mechanical and electrical continuity of conductive enclosures shall be maintained.

Exception: Continuity of conductive enclosures need not be maintained where, in accordance with this Standard, the enclosure is not required to be earthed, e.g. the enclosure contains insulated and sheathed cables only.

3.10.3.4 *Bending*

The radius of every bend in a wiring system shall be such that conductors and cables will not suffer damage.

Bends in rigid conduit shall be such that the internal diameter is not significantly reduced.

Changes of direction in trunking, ducts or similar applications shall permit the bending of cables laid therein, so as to comply with the requirements of this Clause.

NOTE: See Clause 3.9.6 for cable-bending requirements.

3.10.3.5 *Passage for conductors*

Where conductors or cables, including flexible cables and flexible cords, are to be threaded through conduits, tubes or channels, or passed through openings formed in metalwork, such tubes, channels, conduit ends or openings shall be of adequate size and shall—

(a) be provided with bushes that are securely fixed in position; or

(b) if not bushed, have no sharp angles or projecting edges that would be likely to damage a conductor or the insulation, braiding or sheathing of a cable.

3.10.3.6 *Terminations*

Terminations shall be arranged so that wiring enclosures terminate in, and are supported on, electrical equipment in such a manner as to fully protect the enclosed cables as they pass into the electrical equipment.

Each end of flexible conduit shall be securely anchored to the fixed conduit, structure or electrical equipment where it terminates.

3.10.3.7 *Installation in direct sunlight*

Rigid insulating conduit, conduit fittings and cable trunking systems installed in direct sunlight shall be—

(a) of a type designed for such use; or

(b) painted with a light-coloured water-based acrylic paint.

Electrical Workers Licensing Group is licenced to temporarily download this document.
auto login of Electrical Workers Licensing Group may print this document but not more than 10% of the documents subscribed to may be held in printed form at any one time.

Copyright Standards New Zealand

NOTES:

1 AS/NZS 2053.1 and AS/NZS 61386.1 requires that conduits suitable for use in direct sunlight be marked with the letter 'T'.

2 AS/NZS 4296 recommends that cable trunking systems suitable for use in direct sunlight be marked with the letter 'T'.

3.10.3.8 *Provision for expansion*

Provision for expansion shall be provided in runs of rigid insulating conduit.

NOTE: The thermal expansion of rigid insulating conduit for a 10°C temperature rise is approximately 1 mm for each 1 m of length.

3.10.3.9 *Cable trunking*

Cable trunking installations shall be installed as follows:

(a) Covers shall be able to be opened, where practicable.

(b) Covers shall be continuous when passing through walls or floors.

(c) Cable trunking shall be accessible through its entire length.

(d) Cables installed in a trunking shall not rely on any readily removable cover for support.

(e) Non-hygroscopic trunking shall be used to enclose insulated, unsheathed conductors.

(f) Live parts of accessories mounted on cable trunking shall be arranged so that basic protection is provided, in accordance with Clause 1.5.4.

NOTE: See Clause 3.9.9.3 for requirements for penetration of fire-rated constructions.

3.11 UNDERGROUND WIRING SYSTEMS

3.11.1 Suitability and protection

Cables installed underground shall be—

(a) suitable for the environment in which they are placed;

(b) provided with protection against inadvertent damage likely to be caused by manual or mechanical excavation work; and

(c) provided with suitable warnings, marking or other means to minimize the risk of inadvertent damage likely to be caused by manual or mechanical excavation works.

3.11.2 Classification of wiring systems

Underground wiring systems are classified as one of three categories.

The type of cable and form of enclosure determine the category assigned to the underground wiring system.

Category A system—where the wiring system is inherently suitable for installation below ground and no further mechanical protection is required.

COPYRIGHT

Copyright Standards New Zealand

auto login of Electrical Workers Licensing Group is licenced to temporarily download this document.
Electrical Workers Licensing Group may print this document but not more than 10% of the documents subscribed to may be held in printed form at any one time.

Category B system—where the wiring system is suitable for installation below ground only with additional mechanical protection provided for the cable or cable enclosure.

Category C system—where the wiring system is laid within a channel chased in the surface of rock.

Underground cables shall be—

(a) of a type specified in Column 1 of Table 3.5; and

(b) installed in accordance with a category specified in Columns 2 to 9 of Table 3.5.

NOTE: Underground wiring systems do not include those that are—

(a) embedded in a concrete floor, slab or pad;

(b) laid on the surface of the ground either within the building or in outdoor locations;

(c) enclosed in a ventilated cable tunnel; or

(d) enclosed in a trough with removable covers where air circulation is not restricted.

3.11.3 Arrangements

3.11.3.1 *Category A underground wiring systems*

Category A underground wiring systems recognized by this Standard comprise one of the following arrangements:

(a) A system where cables are enclosed in heavy-duty insulating conduit without further mechanical protection.

(b) A system where cables are enclosed in insulating wiring enclosures encased in concrete.

(c) A system where sheathed cables are enclosed in galvanized steel pipe without further mechanical protection.

NOTE: Metal conduits are not suitable for this purpose.

(d) A system where armoured sheathed cables or neutral-screened cables are buried direct in the ground without mechanical protection.

NOTE: Examples of Category A underground wiring systems are given in Figures 3.10 to 3.12.

3.11.3.2 *Category B underground wiring systems*

Category B underground wiring systems recognized by this Standard comprise one of the following arrangements:

(a) A system where cables are enclosed in medium-duty insulating conduit with additional mechanical protection.

(b) A system where sheathed cables are buried direct in the ground with mechanical protection.

auto login of Electrical Workers Licensing Group is licenced to temporarily download this document.
Electrical Workers Licensing Group may print this document but not more than 10% of the documents subscribed to may be held in printed form at any one time.

Copyright Standards New Zealand

Mechanical protection for a Category B underground wiring system is detailed in Clause 3.11.4.3.

NOTE: Examples of Category B underground wiring systems are given in Figures 3.13 to 3.15.

3.11.3.3 *Category C underground wiring system*

Category C underground wiring systems recognized by this Standard comprise cables chased in rock and covered with concrete.

NOTES:

1 A Category A underground wiring system laid in a channel chased in rock, in accordance with Category C system requirements, may be deemed to be Category C.

2 An example of a Category C underground wiring system is given in Figure 3.16.

auto login of Electrical Workers Licensing Group is licenced to temporarily download this document.
Electrical Workers Licensing Group may print this document but not more than 10% of the documents subscribed to may be held in printed form at any one time.

Copyright Standards New Zealand

TABLE 3.5

UNDERGROUND WIRING SYSTEM CATEGORIES

1	2	3	4	5	6	7	8	9
Method of protection—Type of cable	**Heavy-duty conduit***	**Medium-duty conduit* encased in concrete**	**Heavy-duty fibre cement conduit**	**Fibre cement conduit encased in concrete**	**Medium- or heavy-duty galvanized pipe**	**Medium-duty, corrugated or flexible conduit***	**Buried direct in the ground with no enclosure**	**Chased in rock with no enclosure**
Insulated, unsheathed conductors	A	A	NP	NP	NP	B	NP	NP
Insulated and sheathed conductors	A	A	A	A	A	B	B	NP
Sheathed, armoured and served cables	A	A	A	A	A	A	A	C
Neutral-screened cables suitable for underground	A	A	A	A	A	A	A	NP
Neutral-screened cables	A	A	A	A	A	B	B	NP
Served MIMS cables	A	A	A	A	A	B	B	C
Aluminium sheathed or strip armoured cables with PVC sheath	A	A	A	A	A	B	B	C

* These conduits and any associated fittings consist of insulating material only and do not have any conductive components.

KEY:

A = Category A wiring system
B = Category B wiring system
C = Category C wiring system
NP = Not permitted

COPYRIGHT

Copyright Standards New Zealand

Electrical Workers Licensing Group may print this document. Licensing Group is licenced to temporarily download this document. Group but not more than 10% of the documents subscribed to may

3.11.4 Installation requirements

3.11.4.1 *General*

Underground wiring systems shall be installed in accordance with the requirements of Clauses 3.11.4.2 to 3.11.4.6.

* NOTE: Typical arrangements of underground wiring systems are shown, and measurement values also apply to any direction where the cover is relied upon to minimize risk of excavation.

3.11.4.2 *Unenclosed cables*

Any Category A or Category B wiring system that comprises cables not installed in a wiring enclosure shall be laid on a bed of not less than 50 mm of sand or friable soil, free of sharp stone, and covered by not less than 50 mm of the same material.

3.11.4.3 *Category B wiring system mechanical protection*

For a Category B wiring system, additional mechanical protection shall be provided as follows:

(a) The protection shall be placed not more than 75 mm above the wiring system.

(b) The protection shall be not less than 150 mm wide.

(c) The protection shall overlap the wiring system by at least 40 mm on each side.

(d) The protection shall consist of one or a combination of the following:

(i) Precast concrete slabs having a thickness of not less than 40 mm and a classification of not less than grade 20 in accordance with AS 3600 or NZS 3104.

(ii) Concrete slabs cast on-site having a thickness of not less than 100 mm.

(iii) A continuous concrete pour having a thickness of not less than 75 mm.

(iv) Fibrous cement slabs having a thickness of not less than 12 mm.

(v) Bricks manufactured specifically for the protection of electric cables.

(vi) Polymeric cable cover strips complying with AS 4702.

(vii) Other materials that offer the same degree of protection afforded by the materials in Items (i) to (vi).

3.11.4.4 *Minimum depth of cover*

Underground wiring systems shall be installed with the minimum depth of cover and protection specified in Table 3.6.

auto login of Electrical Workers Licensing Group is licenced to temporarily download this document.
Electrical Workers Licensing Group may print this document but not more than 10% of the documents subscribed to may be held in printed form at any one time.

Copyright Standards New Zealand

COPYRIGHT

These dimensions shall apply vertically between the upper surface of—

(a) the wiring system for a Category A or Category C system; or

(b) the additional mechanical protection of a Category B system,

and the surface of the ground or below any poured concrete laid on that surface (see Figures 3.10 to 3.17).

* Where cables are buried close to a sloping or vertical surface, these dimensions shall also apply perpendicular to that surface (see Figure 3.17).

TABLE 3.6

UNDERGROUND WIRING SYSTEMS—MINIMUM DEPTH OF COVER

Location of wiring system	Covering on surface of ground above wiring system	Cat A system	Cat B system	Cat C system
Within confines of a building	Poured concrete of 75 mm minimum thickness	0 mm (directly below)	0 mm (directly below)	0 mm (directly below)
	No surface covering or less than 75 mm thickness of concrete	500 mm	500 mm	50 mm
Elsewhere external to a building	Poured concrete of 75 mm minimum thickness	300 mm	300 mm	50 mm
	No surface covering or less than 75 mm thickness of concrete	500 mm	500 mm	50 mm

3.11.4.5 *Identification of underground wiring*

Wiring systems installed underground shall be identified by an orange marker tape complying with AS/NZS 2648.1. In order to provide early detection of the presence of underground wiring during excavation work, marker tape shall be positioned at approximately 50% of the depth of cover above the wiring system or any additional mechanical protection provided for that system.

Where the wiring system is chased in rock, orange marker tape shall be laid directly on top of the wiring system before the concrete is poured.

Exception: Marker tape may be omitted where an underground wiring system is installed by boring provided that—

(a) the location of the wiring system is marked and recorded in a suitable permanent location that is readily available to any person involved with excavation work at the location of the wiring system; and

(b) if an enclosure is retained after boring operations, the enclosure is coloured orange.

auto login of Electrical Workers Licensing Group is licenced to temporarily download this document.
Electrical Workers Licensing Group may print this document but not more than 10% of the documents subscribed to may be held in printed form at any one time.

Copyright Standards New Zealand

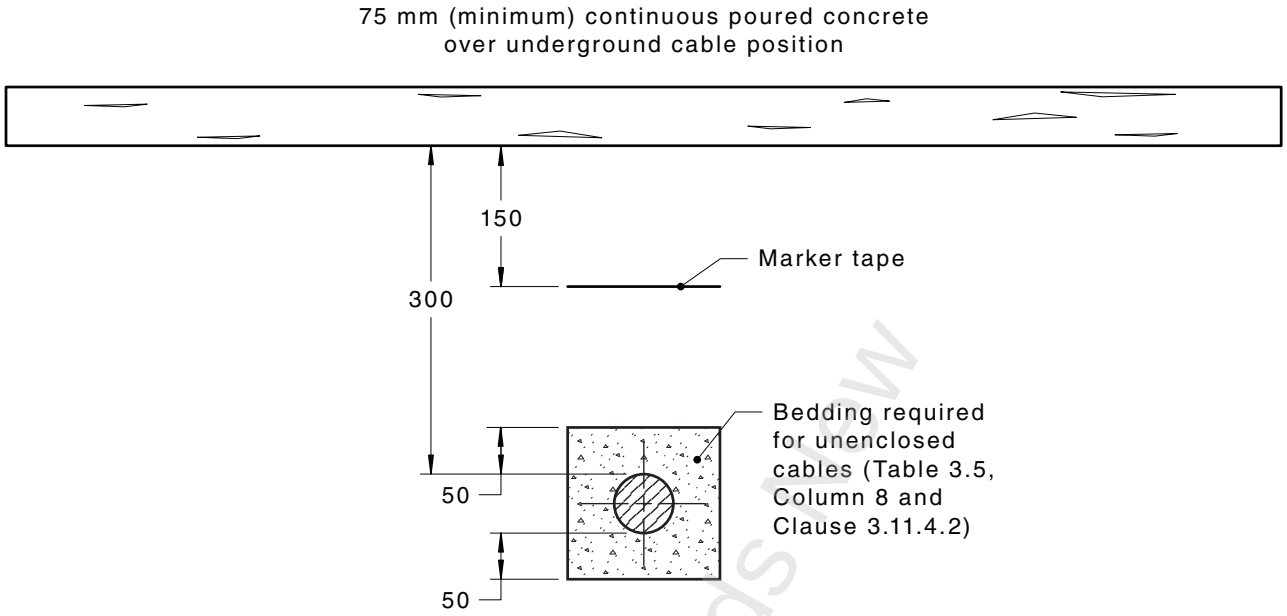

DIMENSIONS IN MILLIMETRES

FIGURE 3.10 EXAMPLE OF A CATEGORY A WIRING SYSTEM WITH CABLE LOCATED BELOW POURED CONCRETE OF 75 mm MINIMUM THICKNESS

NOTE TO FIGURES 3.10 TO 3.17: Refer to Clause 3.11.4.2 for bedding requirements for underground cables not installed in a wiring enclosure.

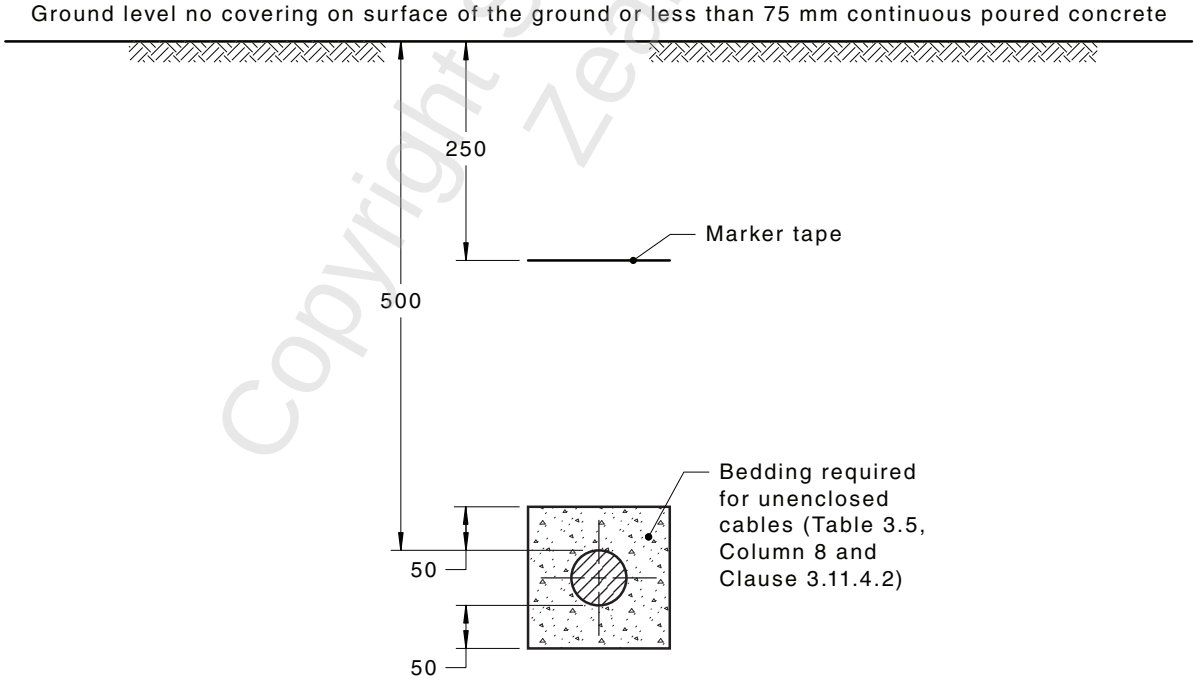

DIMENSIONS IN MILLIMETRES

FIGURE 3.11 EXAMPLE OF A CATEGORY A UNDERGROUND WIRING SYSTEM WITH CABLE LOCATED BELOW NATURAL GROUND

COPYRIGHT

auto login of Electrical Workers Licensing Group is licenced to temporarily download this document.
Electrical Workers Licensing Group may print this document but not more than 10% of the documents subscribed to may be held in printed form at any one time.

Copyright Standards New Zealand

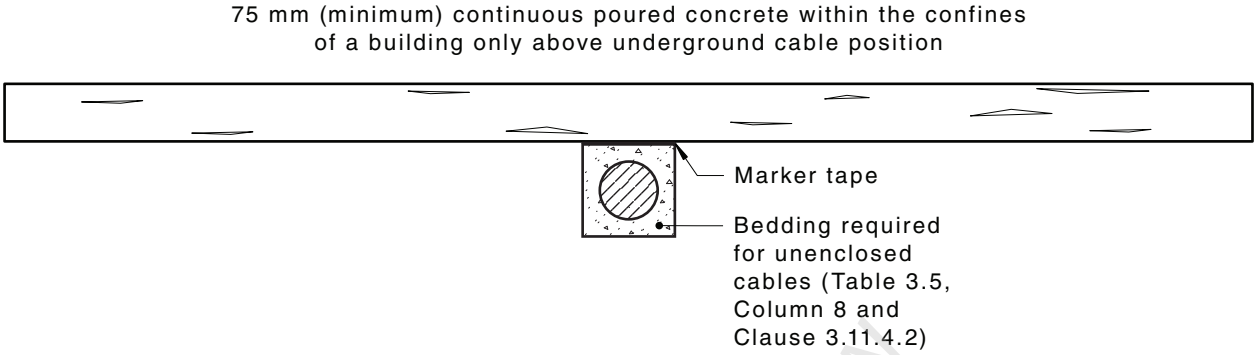

FIGURE 3.12 EXAMPLE OF A CATEGORY A UNDERGROUND WIRING SYSTEM WITH CABLE LOCATED DIRECTLY BELOW POURED CONCRETE OF 75 mm MINIMUM THICKNESS WITHIN THE CONFINES OF A BUILDING

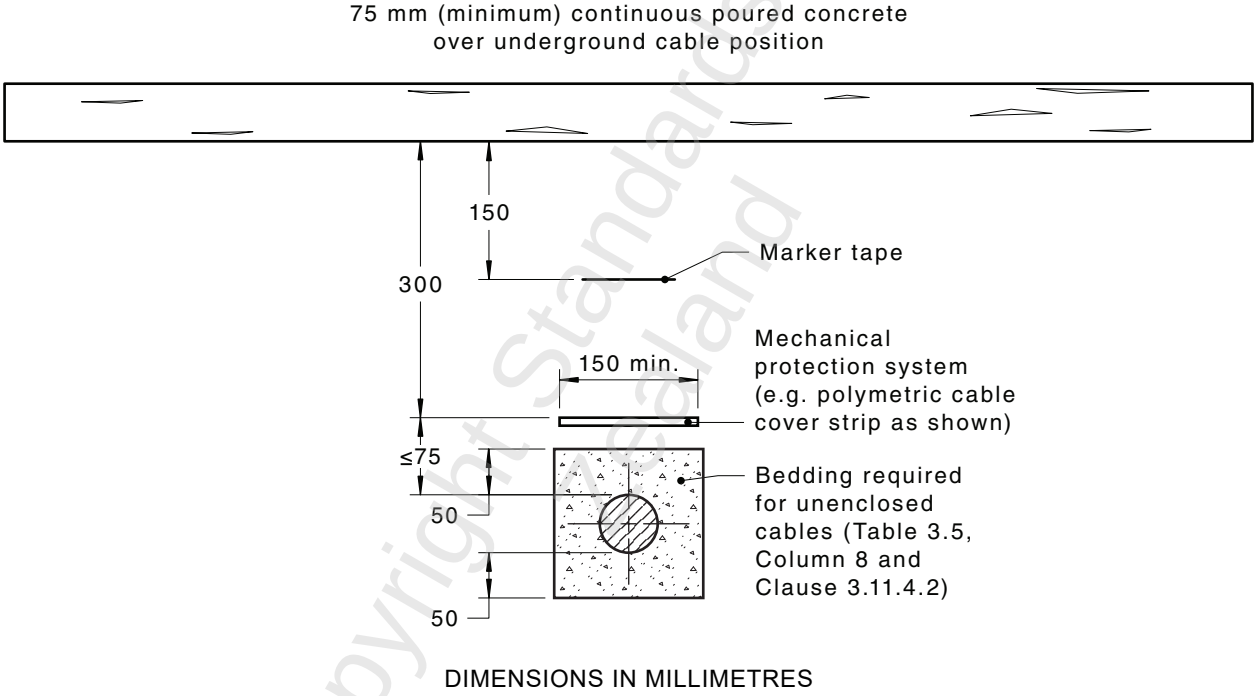

DIMENSIONS IN MILLIMETRES

FIGURE 3.13 EXAMPLE OF A CATEGORY B UNDERGROUND WIRING SYSTEM WITH CABLE LOCATED BELOW POURED CONCRETE OF 75 mm MINIMUM THICKNESS

Copyright Standards New Zealand

auto login of Electrical Workers Licensing Group is licenced to temporarily download this document.
Electrical Workers Licensing Group may print this document but not more than 10% of the documents subscribed to may be held in printed form at any one time.

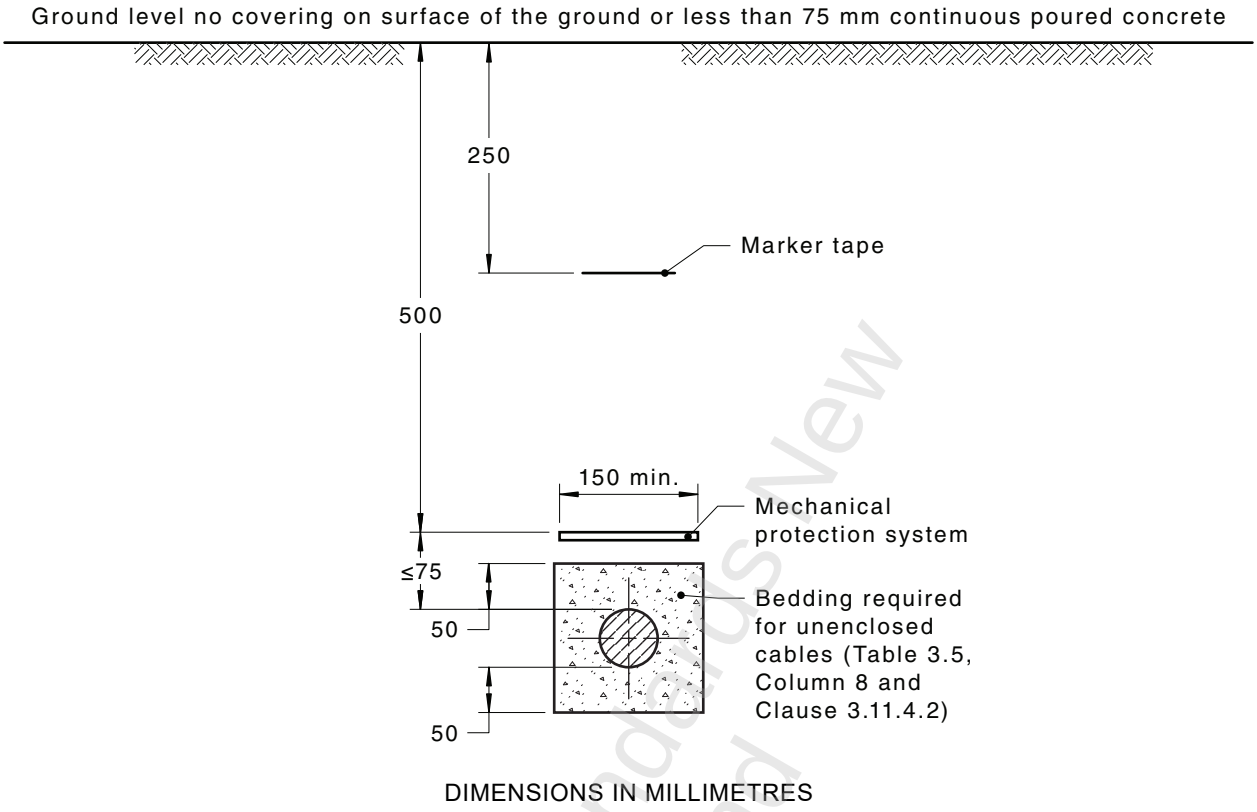

DIMENSIONS IN MILLIMETRES

FIGURE 3.14 EXAMPLE OF A CATEGORY B UNDERGROUND WIRING SYSTEM WITH CABLE LOCATED BELOW NATURAL GROUND

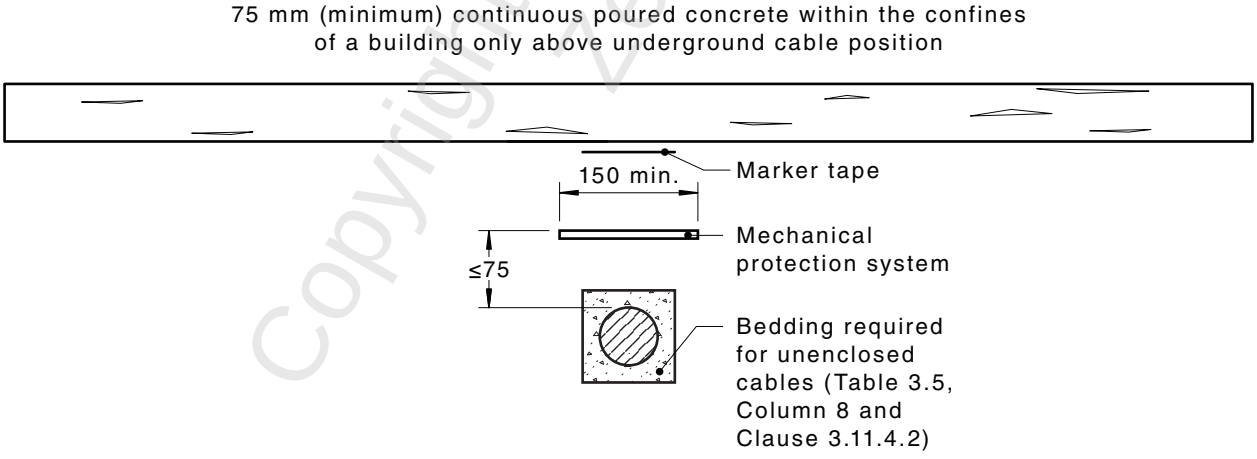

DIMENSIONS IN MILLIMETRES

FIGURE 3.15 EXAMPLE OF A CATEGORY B UNDERGROUND WIRING SYSTEM WITH CABLE LOCATED DIRECTLY BELOW POURED CONCRETE OF 75 mm MINIMUM THICKNESS WITHIN THE CONFINES OF A BUILDING

auto login of Electrical Workers Licensing Group is licenced to temporarily download this document.
Electrical Workers Licensing Group may print this document but not more than 10% of the documents subscribed to may be held in printed form at any one time.

Copyright Standards New Zealand

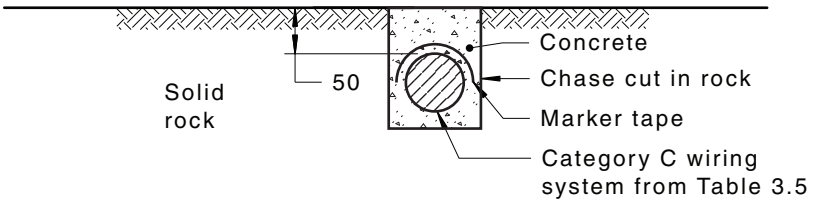

DIMENSIONS IN MILLIMETRES

FIGURE 3.16 EXAMPLE OF A CATEGORY C UNDERGROUND WIRING SYSTEM

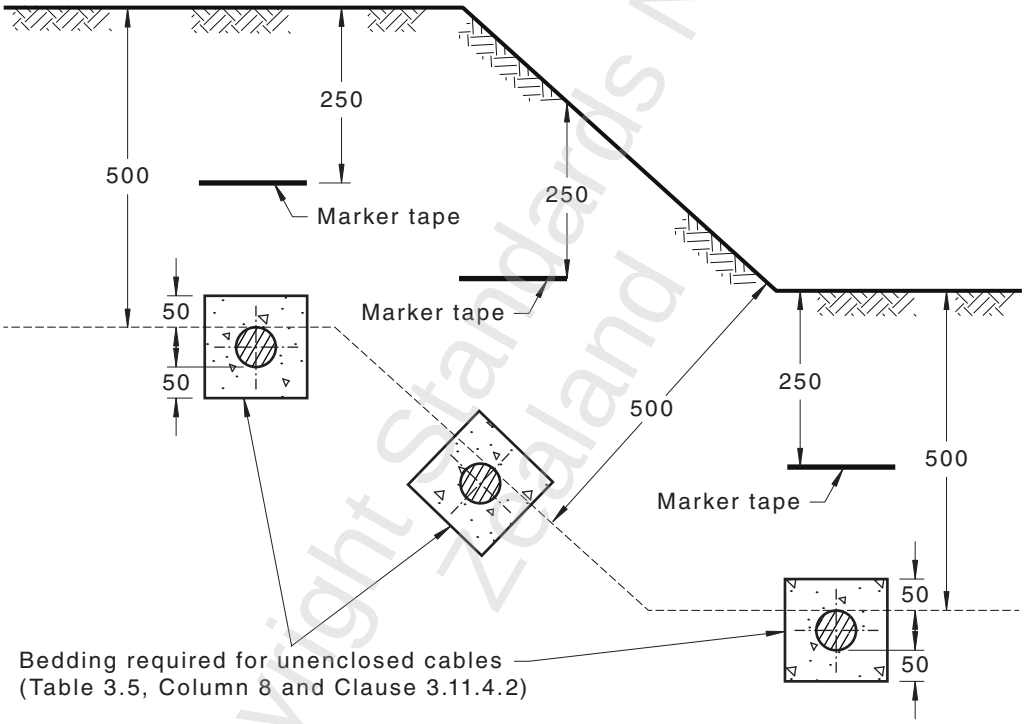

DIMENSIONS IN MILLIMETRES

FIGURE 3.17 EXAMPLE OF AN UNDERGROUND WIRING SYSTEM IN SLOPING GROUND

3.11.4.6 *Marking and recording of underground cable location*

To minimize damage to underground wiring systems during manual or mechanical excavation works, the location of underground wiring shall be marked or recorded as follows:

(a) Permanent cable marker signs shall be provided to indicate the point where a cable enters or leaves a structure.

Exception: Cable entry signs need not be provided where the position of underground cable entry into the ground is obvious.

COPYRIGHT

Copyright Standards New Zealand

auto login of Electrical Workers Licensing Group is licenced to temporarily download this document.
Electrical Workers Licensing Group may print this document but not more than 10% of the documents subscribed to may be held in printed form at any one time.

or

(b) The route of any underground cable shall be recorded on a plan to enable the location of the cable to be determined in the future. This plan shall be located at the switchboard from which the circuit originates. The plan locating the consumer mains shall be kept at the main switchboard of the installation to which it is connected.

Exception: Marking of underground wiring is not required within the confines of a building.

3.11.5 Spacing from other underground services

All underground wiring systems shall be spaced not less than 100 mm from other underground services.

Wiring systems shall be suitably marked with warning tape in accordance with Clause 3.11.4.5 and maintain a separation from telecommunications, gas and water services in accordance with Table 3.7.

Further requirements for the separation of telecommunications, gas and water systems from low voltage wiring systems are provided in Clause 3.9.8.4.

TABLE 3.7

MINIMUM SEPARATION OF UNDERGROUND SERVICES

Type of service	Minimum separation to low voltage electrical service identified in accordance with Clause 3.11.4.5 and mechanically protected[1] mm	Minimum separation of conductive enclosures to low voltage electrical earthing electrode[1] mm
Water service not greater than DN65[2]	100	500
Water service greater than DN65[2]	300	500
Sanitary drainage	100	500
Stormwater drainage	100	600
Gas	100	500
Telecommunications	100	

NOTES:

1 Authorities, such as water and gas suppliers and electricity distributors, may require their services to be spaced at a greater distance from underground wiring systems. Also see Figure 3.10.

2 DN = internal diameter of pipe.

Exceptions:

1 Two or more underground wiring systems may be grouped together where they are associated with the same electrical installation.

COPYRIGHT

Copyright Standards New Zealand

auto login of Electrical Workers Licensing Group is licenced to temporarily download this document.
Electrical Workers Licensing Group may print this document but not more than 10% of the documents subscribed to may be held in printed form at any one time.

2 The requirements of this Clause (Clause 3.11.5) may be varied where a number of services are installed touching in a common trench, provided that each service is installed in a separate enclosure that identifies the service.

3 Separation distances between conductive enclosures and the earthing electrode are not required where all conductive enclosures are bonded within the installation.

3.12 AERIAL WIRING SYSTEMS

NOTE: The use of aerial wiring systems may be prohibited by the relevant regulatory authority in some areas, particularly those areas at risk of bushfire.

3.12.1 Types of conductor

Conductors used as aerial conductors shall be—

(a) hard-drawn bare conductors;

(b) polymeric insulated cables;

(c) neutral-screened cables; or

(d) parallel-webbed, twisted or bundled insulated cables.

3.12.2 Arrangements

3.12.2.1 *Insulation of aerial conductors*

Aerial conductors shall be insulated in the following situations:

(a) For any conductor span that is attached to a building or structure.

Exception: This requirement need not apply to aerial conductors between and supported by two independent poles or similar independent supports.

(b) For any conductor span within arm's reach of any building, building opening or structure.

(c) Above areas where sailing craft or irrigation pipes are used (see Table 3.8).

(d) In areas declared by the responsible fire authority as being subject to bushfires, where required by the regulatory authority or the electricity distributor.

3.12.2.2 *Minimum size*

The minimum size of aerial conductors shall be as follows:

(a) *Copper and aluminium conductors* Copper or aluminium conductors installed as aerial conductors shall have not less than seven strands and shall be not smaller than 6 mm^2 for copper or 16 mm^2 for aluminium.

(b) *Steel conductors* Steel conductors installed as aerial conductors shall have not less than three strands.

COPYRIGHT

Copyright Standards New Zealand

auto login of Electrical Workers Licensing Group is licenced to temporarily download this document.
Electrical Workers Licensing Group may print this document but not more than 10% of the documents subscribed to may be held in printed form at any one time.

3.12.3 Clearances

3.12.3.1 *General*

Aerial conductors for low voltage systems shall be installed such that clearances from ground, buildings and structures other than public roadways are not less than those given in Table 3.8.

NOTE: These clearances do not apply to pole supports or independent supports for the aerial conductors themselves.

Clearances shall be maintained in any direction from any position to which any part of such conductors may either sag at a maximum conductor temperature of 115°C or move as a result of wind pressure.

When aerial conductors are being strung, an additional clearance shall be provided so that the distances specified in Table 3.8 are obtained up to a maximum conductor temperature of 115°C.

NOTE: Table D2 of Appendix D uses sag allowances that make provision for additional clearances.

Where aerial conductors terminate above or to the side of a building or structure, a suitable clearance to prevent contact with the building or structure shall be provided.

Connections between aerial conductors and circuit wiring shall not be regarded as aerial conductors but shall be out of arm's reach from the ground or from an elevated area.

NOTE: Regulatory authorities may have additional requirements regarding aerial conductor clearances.

3.12.3.2 *Safety warnings*

Suitable devices or notices, warning of the presence of aerial conductors, shall be erected in locations where such conductors are erected—

(a) above areas used by sailing craft;

(b) where long lengths of conductive piping, such as irrigation pipes, may reasonably be expected to be raised or otherwise handled;

(c) where loading or unloading of high vehicles is likely to occur; or

(d) in other locations where the risk of inadvertent contact with aerial conductors may reasonably be anticipated.

NOTES:

1 The responsible water authority may have additional signage requirements where aerial conductors cross a waterway.

2 The relevant authority may require aerial conductors in the vicinity of an aerodrome, airport or landing strip to carry aircraft warning devices.

auto login of Electrical Workers Licensing Group is licenced to temporarily download this document.
Electrical Workers Licensing Group may print this document but not more than 10% of the documents subscribed to may be held in printed form at any one time.

Copyright Standards New Zealand

TABLE 3.8
MINIMUM AERIAL CONDUCTOR CLEARANCES

All dimensions in metres

Type of aerial conductor	Minimum height above buildings, structures, ground or elevated areas				From buildings—Horizontal clearance from walls, etc.	From clothes lines, radio and television aerials, counter-poise or stay wires	From tele-communications lines[2]	Above swimming pools	Above areas where sailing craft, or irrigation pipes are used[3]
	Over areas used by vehicles	Over areas not used by vehicles	Over roofs used for traffic or resort	Over other roofs and structures					
Bare live conductors	5.5	5.0	3.7	3.0	2.0	2.0	1.2	Not permitted	Not permitted
Insulated and unsheathed live conductors	4.6	3.0	3.0	2.0	1.0	2.0	0.6	3.0	5.5
Neutral-screened cable	4.6	3.0	2.7	0.5	1.0	2.0	0.6	3.0	4.5

NOTES:

1 When erecting aerial conductors an allowance for sag and sway under operating conditions needs to be added to ensure that the above clearances are maintained. (Refer Clause 3.12.3 and Appendix D.)

2 Further information regarding required clearances for crossing telecommunication lines is contained in AS/CA S009.

3 Warning notices shall be erected where required by Clause 3.12.3.2.

4 Increased distances may be required over public roadways.

COPYRIGHT

Copyright Standards New Zealand

auto login of Electrical Workers Licensing Group is licenced to temporarily download this document.
Electrical Workers Licensing Group may print this document but not more than 10% of the documents subscribed to may be held in printed form at any one time.

3.12.4 Distance between supports (spans)

The length of span of aerial conductors shall not exceed the values specified in Table 3.9 for the appropriate type and size of conductor.

Exception: Spans greater than the values specified in Table 3.9 may be used, provided that the design is in accordance with sound engineering practice.

NOTES:

1 An indication of acceptable stringing practice is given in Table D2 of Appendix D.

2 More detailed information is available in AS/NZS 7000.

TABLE 3.9

AERIAL CONDUCTOR MAXIMUM SPANS

Type of conductor	Size mm²	Maximum span m
Insulated annealed copper including neutral-screened	≥6	20
Bare hard-drawn copper	≥6	60
Insulated hard-drawn copper including two-, three- and four-core twisted but excluding neutral-screened	6 10 ≥16	40 50 60
Neutral-screened cables with hard-drawn copper conductors—		
two conductors	6 or 10	40
three conductors	6 or 10	60
four conductors	6 or 10	50
two, three, or four conductors	16	60
Insulated or bare aluminium excluding neutral-screened	16 ≥25	50 60
Aerial bundled cables (aluminium conductor)	≥25	60

3.12.5 Aerial conductor supports

3.12.5.1 *General*

Supports for aerial conductors shall be insulators or purpose-designed fittings suitable for the type of cable with which they are used.

3.12.5.2 *Pin-type insulators*

Pin-type insulators shall not be used for supporting aerial conductors where—

(a) the strain tends to lift or otherwise separate the conductors from the insulators; or

COPYRIGHT

Copyright Standards New Zealand

auto login of Electrical Workers Licensing Group is licenced to temporarily download this document.
Electrical Workers Licensing Group may print this document but not more than 10% of the documents subscribed to may be held in printed form at any one time.

(b) the direction of the conductors is changed by more than 30°.

3.12.5.3 *Hardware*

Any hardware or fittings used in association with the aerial line shall be of corrosion-resistant material, or other material suitably protected against corrosion.

3.12.5.4 *Spacing between conductors*

Conductors shall be adequately spaced to prevent contact with each other under all conditions of sag and sway.

The spacing between conductors at supports, measured in any direction, shall be not less than that shown in Table 3.10.

Exception: The spacing between conductors of a multi-core cable or cables operated in parallel may be less than that shown in Table 3.10.

NOTE: The electricity distributor may require a minimum clearance between consumer aerial lines and any electricity distributor aerial lines.

TABLE 3.10

SPACING BETWEEN AERIAL CONDUCTORS AT SUPPORTS

Span	Spacing m	
	Insulated conductors	Bare conductors
≤10	0.2	0.4
>10 ≤25	0.3	0.5
>25 ≤45	0.4	0.6
>45 ≤60	0.5	0.7

3.12.6 Poles and posts (including supports, struts and extensions to structures)

Poles and posts shall be constructed of materials suitable for the conditions of use, taking account of the following:

(a) Size.

(b) Depth in ground.

NOTES:

1 Guidance on the size of a typical range of poles and posts is given in Appendix D.

2 Guidance on the depth in ground for a typical range of poles and posts of lengths up to 7 m above the ground is given in Appendix D.

The depth in ground may be reduced if the pole or post is set in solid rock, provided that the arrangement is not inferior to installation in accordance with the above requirements.

COPYRIGHT

Copyright Standards New Zealand

auto login of Electrical Workers Licensing Group is licenced to temporarily download this document.
Electrical Workers Licensing Group may print this document but not more than 10% of the documents subscribed to may be held in printed form at any one time.

If the support of the soil is poor, the pole or post shall be sunk to a greater depth or other means used to stabilize it.

NOTE: More detailed information is available in AS/NZS 7000.

3.12.7 Joints and connections

All joints and connections in aerial conductors shall be carried out in accordance with Clause 3.7.

3.13 CABLES SUPPORTED BY A CATENARY

3.13.1 Types of cables

Cables supported by means of a catenary shall be stranded cables affording double insulation or the equivalent of double insulation.

Cables and catenary supports installed out of doors shall be suitable for exposure to direct sunlight.

NOTE: Cables are considered to be adequately supported if supported by a catenary and thereby relieved from excessive mechanical stresses.

3.13.2 Catenary supports

A catenary shall—

(a) provide uniform support;

(b) consist of material equally resistant to corrosion or deterioration;

(c) be effectively fixed at each end;

(d) be capable of withstanding mechanical stresses likely to occur, in particular, those because of wind or ice; and

(e) be mounted at a sufficient height above the ground to prevent danger to persons or livestock, or damage to the cable being supported.

NOTE: A catenary may form part of a cable, in which case it should be installed in accordance with the manufacturer's instructions.

3.13.3 Clearances

Cables supported by a catenary wire shall maintain the following clearances:

(a) In an outdoor location, as specified in Clause 3.12.3 for a neutral-screened cable.

(b) In an indoor location, not less than 100 mm from any moving parts or parts of equipment operating at an elevated temperature.

3.14 SAFETY SERVICES

Wiring systems for safety services shall, in addition to complying with this Section, be installed in accordance with the requirements of Clause 7.2.

auto login of Electrical Workers Licensing Group is licenced to temporarily download this document.
Electrical Workers Licensing Group may print this document but not more than 10% of the documents subscribed to may be held in printed form at any one time.

Copyright Standards New Zealand

3.15 BUSWAYS, INCLUDING RISING MAINS SYSTEMS

Busbar trunking systems (busways) shall comply with AS/NZS 3439.2 or AS/NZS 61439.6, and shall be installed in accordance with the manufacturer's instructions.

Where used as a wiring system, the installation shall be in accordance with the relevant requirements of Clause 3.9.

NOTE: See Clause 3.9.9.3 for requirements for penetration of fire-rated constructions.

3.16 EARTH SHEATH RETURN (ESR) SYSTEM

The earth sheath return (ESR) system is one where the copper sheath of a MIMS cable forms a single conductor that is used as both a protective earthing (PE) conductor and a neutral (N) conductor simultaneously.

Only a copper sheath may be used as a combined protective earthing and neutral (PEN) conductor.

These cables shall be installed in accordance with Clause 3.9.7.3 and the following:

(a) The sheath shall be of adequate cross-sectional area and conductivity.

(b) The ESR system shall be used only in electrical installations where the MEN earthing system is used. It shall commence at the location where the neutral and earthing conductors are connected to form the MEN connection.

(c) Where the combined protective earthing and neutral (PEN) conductor is changed to provide a separate neutral and protective earth to electrical equipment, then the neutral and protective earth shall not be combined again to form a combined protective earthing and neutral (PEN) conductor.

(d) The ESR system shall not be installed in hazardous areas.

(e) Conductors used in an ESR system shall not be smaller than 2.5 mm^2.

(f) At every joint in the sheathing, and at terminations, the continuity of the combined protective earthing and neutral (PEN) conductor shall be ensured by a bonding conductor in addition to the means used for sealing and clamping the external conductor.

The resistance of the bonding conductor at joints shall not exceed that of the cable sheath.

(g) Two conductors, one for protective earthing and one for the neutral, shall be used at terminations. The minimum size for the protective earthing conductor shall be in accordance with Clause 5.3.3 and Table 5.1, and the minimum size for the neutral conductor shall be 6 mm^2, or in accordance with Clause 3.5.2.

COPYRIGHT

Copyright Standards New Zealand

auto login of Electrical Workers Licensing Group is licenced to temporarily download this document.
Electrical Workers Licensing Group may print this document but not more than 10% of the documents subscribed to may be held in printed form at any one time.

(h) Where several cables are associated, e.g. single-core cables used in a multiphase circuit, the cables shall be arranged in accordance with Clause 3.9.10.3.

(i) The circuit shall be clearly identified on the switchboard at which the circuit originates to indicate that the circuit is using the ESR system.

(j) No switch shall operate in the combined protective earthing and neutral (PEN) conductor of an ESR system.

(k) Only electrical fittings identified as suitable for use in conjunction with an ESR system shall be used.

NOTE: Circuits employing ESR systems are unable to be protected by RCDs.

auto login of Electrical Workers Licensing Group is licenced to temporarily download this document.
Electrical Workers Licensing Group may print this document but not more than 10% of the documents subscribed to may be held in printed form at any one time.

Copyright Standards New Zealand

SECTION 4 SELECTION AND INSTALLATION OF ELECTRICAL EQUIPMENT

4.1 GENERAL

4.1.1 Application

This Section specifies the minimum requirements for the selection and installation of electrical equipment, including appliances and accessories that shall be achieved to satisfy Part 1 of this Standard.

4.1.2 Selection and installation

Electrical equipment shall be selected and installed to perform the following functions or to have the following features:

(a) Enable the electrical equipment to function properly under external influences to which it is expected to be exposed.

(b) Prevent any adverse effects that the electrical equipment might cause on the electrical installation.

(c) Operate safely when properly assembled, installed and connected to supply.

(d) Ensure that there is no danger from electric shock, fire, high temperature or physical injury in the event of reasonably expected conditions of overload, abnormal operation, fault or external influences.

(e) Installed in accordance with the requirements of this Section, and the additional requirements as specified in the manufacturer's instructions.

This Standard requires certain electrical equipment to satisfy these provisions through compliance with nominated Australian/New Zealand Standards or other relevant Standards.

The requirements of this Section relate to the following:

(i) External influences and environmental conditions.

(ii) Adverse effects on the electrical installation and the supply.

(iii) Protection against thermal effects.

(iv) Methods of connection of electrical equipment.

(v) Installation of socket-outlets, lighting and heating equipment.

(vi) Electricity converters including UPS systems.

(vii) Control, overload and overtemperature protection of motors.

(viii) Transformers.

COPYRIGHT

auto login of Electrical Workers Licensing Group is licenced to temporarily download this document.
Electrical Workers Licensing Group may print this document but not more than 10% of the documents subscribed to may be held in printed form at any one time.

Copyright Standards New Zealand

(ix) Capacitors.

(x) Electrical equipment containing liquid dielectrics.

A2 (xi) Smoke alarms and fire detectors.

NOTES:

1 Electrical equipment may be remotely switched. In particular, appliances, such as water heaters, room heaters or airconditioning systems may constitute a 'controlled hours' load. Therefore, care should be taken to ensure isolation of any circuit or equipment switched by an automatic or remote control system when working on such equipment, as electricity supply could be connected without warning.

* 2 Refer to Clause 4.7.3 and Figure 4.17 for clearance of socket-outlets and switches from open cooking surfaces.

* 3 Refer to Section 6 for where electrical appliances and accessories are installed in locations containing a bath, shower or other fixed water container.

* 4 In New Zealand, attention is drawn to the requirements of NZECP 55 for wiring and fittings located near conductive thermal insulation. NZ

4.1.3 External influences

All electrical equipment shall have characteristics appropriate to the conditions to which it is likely to be exposed, to ensure that the electrical equipment is able to function properly at the intended point of installation.

The characteristics may comprise—

(a) suitable design and construction properties of the electrical equipment; or

(b) additional means, provided as part of the electrical installation that do not adversely affect the operation of the electrical equipment, to effectively protect against the presence and extent of relevant environmental and other influences.

Damage from external influences may include, but is not limited to, that arising from exposure to one or any combination of the following, as appropriate:

(i) Mechanical damage.

(ii) Weather, including rain, snow, ice and sunlight (UV radiation).

(iii) Water, including splashing, spraying, submersion or high humidity.

(iv) Flora, including vines, weeds, flowers and plants of all types.

(v) Fauna, including cats, dogs, horses, cattle, etc.

(vi) Excessive dampness, including wet areas and poorly sealed underground cellars, etc.

(vii) Corrosive fumes, liquids or polluting substances, particularly those used in a sanitization process associated with the food industry.

COPYRIGHT

Electrical Workers Licensing Group may print this document but not more than 10% of the documents subscribed to may be held in printed form at any one time.
auto login of Electrical Workers Licensing Group is licenced to temporarily download this document.

(viii) Galvanic action.

(ix) Accumulation of dust or solid foreign bodies.

(x) Steam.

(xi) Oil.

(xii) Temperature, including both high and low temperatures.

(xiii) Solar radiation.

(xiv) Explosive atmospheres (often referred to as ‘hazardous areas’).

(xv) Vibration.

(xvi) Seismic activity (earthquakes and tremors).

NOTES:

1 AS 60529 provides an IP classification and marking system for electrical equipment and enclosures that provide different degrees of protection against the entry of water and solid objects.

* 2 Purpose-made, anti-condensation and water drains that maintain the IP rating of the enclosure may be used.

* 3 Drilling a drain hole in the bottom of the enclosure alone destroys the IP rating of the enclosure.

* Electrical accessories not having any specific degree of protection marked on the product are considered to be protected from the weather when installed within the space contained by the soffit (the edge of the eave, verandah or similar overhang) and a plane from the outer edge of the soffit, at an angle of 30 degrees, continuing to the exterior wall.

* Electrical accessories installed outside that area shall have a minimum degree of protection of IP33. Refer to Figures 4.1 and 4.2.

NOTE: Refer to local service rules for any additional requirements.

Exceptions:

* *1 Metering enclosures and overhead line connector boxes complying with AS 3124 installed in the unprotected areas shown in Figures 4.1 and 4.2 need to have a minimum degree of protection of IP23.*

2 Electrical accessories installed within metering enclosures need not comply with the requirements for unprotected areas shown in Figures 4.1 and 4.2.

auto login of Electrical Workers Licensing Group is licenced to temporarily download this document.
Electrical Workers Licensing Group may print this document but not more than 10% of the documents subscribed to may be held in printed form at any one time.

Copyright Standards New Zealand

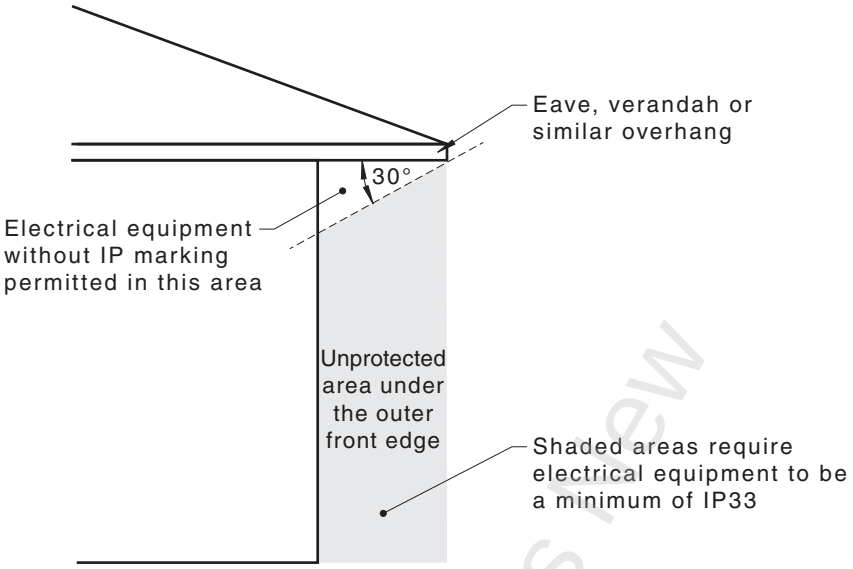

FIGURE 4.1 AREA UNDER AN OVERHANG REQUIRING ACCESSORIES TO BE A MINIMUM OF IP33 (SIDE VIEW)

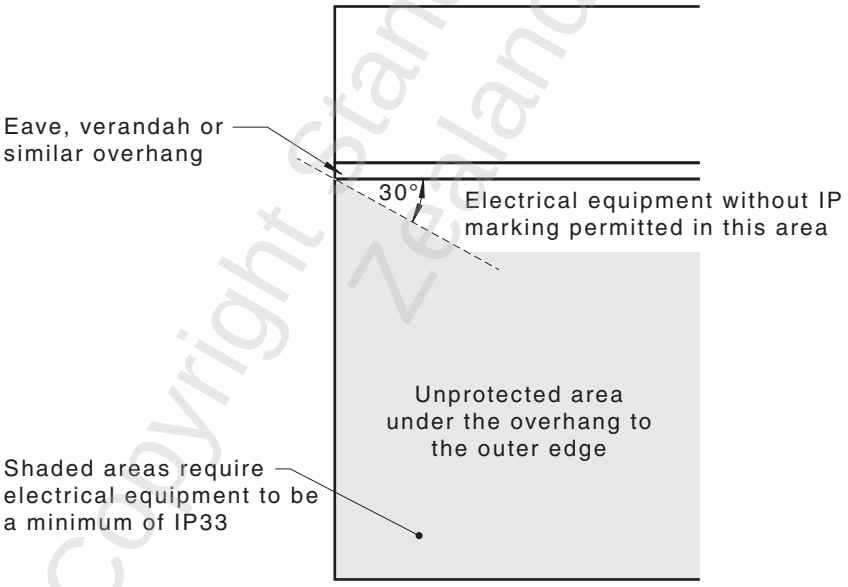

FIGURE 4.2 AREA UNDER AN OVERHANG REQUIRING ACCESSORIES TO BE A MINIMUM OF IP33 (FRONT VIEW)

4.1.4 Adverse effects and interference

All electrical equipment shall be selected so that, during normal operation, including switching, it will not cause harmful effects to other equipment.

Factors that may need to be considered include the following:

(a) Power factor.

Copyright Standards New Zealand

auto login of Electrical Workers Licensing Group is licenced to temporarily download this document.
Electrical Workers Licensing Group may print this document but not more than 10% of the documents subscribed to may be held in printed form at any one time.

(b) Excessive voltage fluctuation.

(c) Severe distortion of current waveforms.

(d) Electromagnetic emission.

A1

4.1.5 Air extraction systems

Air extraction systems may adversely affect the safe operation of combustion appliances, including those in other rooms, potentially resulting in carbon monoxide poisoning. Advise the customer to have their flued combustion appliances tested by a competent person to ensure correct operation.

4.2 PROTECTION AGAINST THERMAL EFFECTS

4.2.1 General

The selection and installation of electrical equipment shall be such that the temperature characteristics of the electrical equipment, when properly installed and operated, do not adversely affect the electrical equipment, the electrical installation itself, or any other installation, whether electrical or not.

Adequate ventilation shall be provided, where necessary, in order to maintain operating temperatures within the rated or specified limits of the affected equipment if heat is generated in normal operation.

NOTE: Account should be taken of the influence that temperature might have on the operational or characteristic values of the electrical equipment.

4.2.2 Prevention of fire hazard

4.2.2.1 *Installation of electrical equipment*

Electrical equipment shall not be installed in a position where it might cause a fire hazard.

4.2.2.2 *Storage of flammable materials*

Where there is a likelihood that an area will be used to store flammable materials, measures shall be taken to prevent ignition of such materials by sparks or high temperature sources.

NOTE: See Clause 7.7 for requirements for hazardous areas.

4.2.2.3 *Protection from high temperatures*

(a) *High surface temperature* Where fixed electrical equipment could attain surface temperatures that would cause a fire hazard to adjacent materials, the electrical equipment shall be—

(i) mounted on or within materials that will withstand such temperatures and are of low thermal conductance;

(ii) screened from combustible building elements by materials that will withstand such temperatures and are of low thermal conductance; or

COPYRIGHT

auto login of Electrical Workers Licensing Group is licenced to temporarily download this document.
Electrical Workers Licensing Group may print this document but not more than 10% of the documents subscribed to may be held in printed form at any one time.

Copyright Standards New Zealand

(iii) mounted at a sufficient distance from any material on which such temperatures could have deleterious thermal effects, any means of support being of low thermal conductance so as to allow safe dissipation of heat.

(b) *High radiant temperature* Fixed electrical equipment causing a focusing or concentration of heat shall be placed at a sufficient distance from any fixed object or building element so that the object or element, in normal conditions, cannot be subjected to a dangerous temperature.

NOTES:

1 Some building materials can be affected by pyrolysis—the decomposition of organic material as a result of long-term exposure to elevated temperatures. Where exposed to high temperatures for a significant period of time such materials can degenerate and self-ignite.

2 Tungsten filament lamps, ELV halogen lamps, radiant heaters, infra-red lamps, ballasts and transformers are examples of high temperature sources.

3 Restriction of heat dissipation from electrical equipment, e.g. by thermal insulation, can result in high temperatures in the electrical equipment itself.

4.2.2.4 *Emission of arcs or sparks*

Where arcs or sparks might be emitted by permanently connected electrical equipment in normal service, the electrical equipment shall be—

(a) totally enclosed in arc-resistant material;

(b) screened by arc-resistant material from building elements on which the arcs could have deleterious thermal effects; or

(c) mounted at sufficient distance from building elements on which the arcs or sparks could have deleterious thermal effects, to allow safe extinction of the arcs or sparks.

4.2.2.5 *Electrical equipment enclosures*

The materials of enclosures of electrical equipment shall withstand the highest temperature likely to be produced by the electrical equipment.

Flammable or readily combustible materials shall not be used for the construction of enclosures.

4.2.2.6 *Prevention of spread of fire*

Electrical equipment, including switches, socket-outlets and other accessories, shall be arranged to provide a separation of not less than 300 mm horizontally and 600 mm vertically from any opening or recess in the opposite side of a wall, ceiling or floor that is required to be fire-rated (e.g. a ‘fire-rated barrier’).

The openings made for electrical equipment installed in fire-rated barriers shall not penetrate beyond 50% of the thickness of the barrier.

auto login of Electrical Workers Licensing Group is licenced to temporarily download this document.
Electrical Workers Licensing Group may print this document but not more than 10% of the documents subscribed to may be held in printed form at any one time.

Copyright Standards New Zealand

COPYRIGHT

Any gap between electrical equipment and a fire-rated barrier shall be sealed to the degree of fire-resistance prescribed for the barrier, in accordance with the relevant provisions of the national building codes.

NOTES:

1 Guidance on materials suitable for restoring fire-rated constructions is given in national building codes.

2 National building codes may have requirements for restoring acoustic insulation that has been penetrated by electrical equipment.

4.2.2.7 *Thermal insulation—New Zealand only* NZ

In New Zealand only, appliances and accessories in domestic installations shall be installed on the assumption that thermal insulation in ceilings, walls and under floors, if not currently installed, will be installed in the future.

4.2.3 Protection against burns

An accessible part of electrical equipment within arm's reach shall not attain a temperature in excess of the appropriate limit stated in Table 4.1.

Each accessible part of the electrical installation that may, even for a short period, attain a temperature exceeding the appropriate limit in Table 4.1 under normal load conditions shall be guarded so as to prevent accidental contact.

Exceptions:

1 This requirement need not apply to electrical equipment that complies with a limiting temperature specified in an appropriate Standard.

2 This requirement does not apply to items such as lamps.

TABLE 4.1

TEMPERATURE LIMITS IN NORMAL SERVICE FOR PARTS OF ELECTRICAL EQUIPMENT WITHIN ARM'S REACH

Accessible part	Material of accessible surface	Maximum temperature °C
Hand-held means of operation	Metallic	55
	Non-metallic	65
Parts intended to be touched but not hand-held	Metallic	70
	Non-metallic	80
Parts that need not be touched for normal operation	Metallic	80
	Non-metallic	90

Copyright Standards New Zealand

auto login of Electrical Workers Licensing Group is licenced to temporarily download this document.
Electrical Workers Licensing Group may print this document but not more than 10% of the documents subscribed to may be held in printed form at any one time.

4.3 CONNECTION OF ELECTRICAL EQUIPMENT

4.3.1 General

Electrical equipment may be connected to the installation wiring by one of the methods detailed in Clauses 4.3.2 to 4.3.5.

In all cases, the point of connection to the installation wiring shall be as close as practicable to the electrical equipment and the connection shall be effectively protected against mechanical damage or interference.

Wiring within, and forming part of, an item of electrical equipment is considered to be equipment wiring. Such wiring shall be in accordance with the relevant product Standard or, where no relevant product Standard exists, AS/NZS 3100.

A2 Electrical accessories complying with AS/NZS 3105, AS/NZS 3122 or AS/NZS 3199 shall not be used to connect equipment wiring to installation wiring where the location is not readily accessible.

4.3.2 Direct connection

4.3.2.1 *General*

The installation wiring of the electrical installation shall be directly connected to terminals provided on the electrical equipment for the purpose (see Figure 4.3).

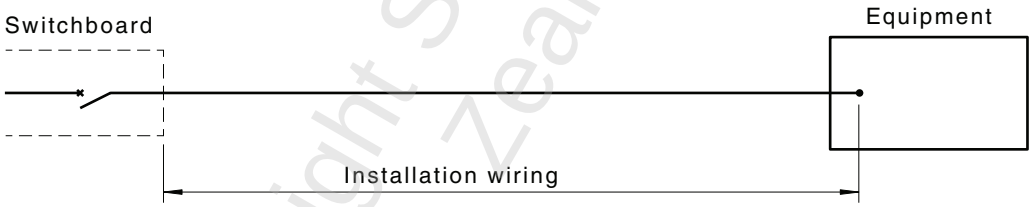

FIGURE 4.3 DIRECT CONNECTION

4.3.2.2 *Installation coupler*

An installation coupler, enclosed or unenclosed, that meets the requirements of AS/NZS 61535 is a suitable method for the electrical connection of cables, including flexible cords, flexible cables and rigid (solid or stranded) cables.

NOTES:

1 Installation couplers are intended for permanent connection between sections of wiring, particularly in ‘soft’ wiring systems, in which case they are treated in the same manner as a junction box.

2 Installation couplers require a deliberate act to disengage the latching mechanism and are not intended to be engaged or disconnected under load or to be used as socket-outlets.

Copyright Standards New Zealand

auto login of Electrical Workers Licensing Group is licenced to temporarily download this document.
Electrical Workers Licensing Group may print this document but not more than 10% of the documents subscribed to may be held in printed form at any one time.

Wiring from an installation coupler to electrical equipment is regarded as installation wiring (see Figure 4.4).

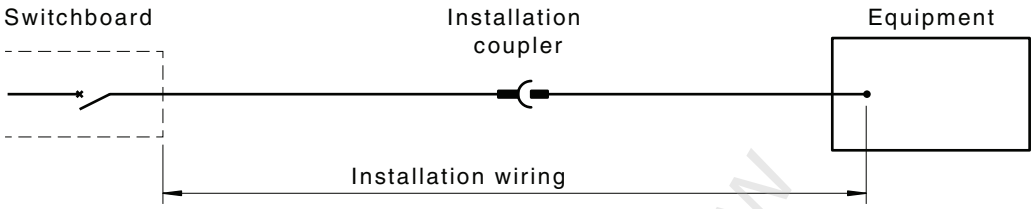

FIGURE 4.4 DIRECT CONNECTION BY INSTALLATION COUPLER

Exception: Where the manufacturer of an item of electrical equipment provides supply terminals for the equipment at a plug designed for connection to an installation coupler, the wiring between the plug and the equipment is regarded as equipment wiring (see Figure 4.5).

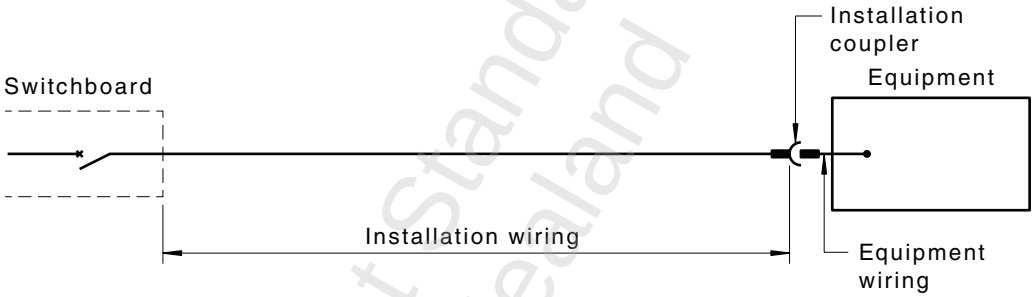

FIGURE 4.5 DIRECT CONNECTION BY INSTALLATION COUPLER—EXCEPTION

* **4.3.3 Installation wiring connected by an installation coupler(s)**

* **4.3.3.1** *General*

Cords or cables connected by an installation coupler shall be—

(a) of heavy-duty sheathed type complying with AS/NZS 3191 and the requirements of Clause 3.9.7.4 or AS/NZS 5000;

(b) selected to suit the protection device;

Exception: For sections of installation wiring that terminate within a single piece of electrical equipment, such as a luminaire, single socket-outlet or SELV socket-outlet, the cable may be reduced to suit the rating of that single piece of electrical equipment.

(c) adequately protected and installed to minimize the risk of mechanical damage in accordance with Clause 3.3.2.6;

COPYRIGHT

Copyright Standards New Zealand

Electrical Workers Licensing Group is licenced to temporarily download this document.
auto login of Electrical Workers Licensing Group may print this document but not more than 10% of the documents subscribed to may be held in printed form at any one time.

(d) supported and fixed in position in accordance with Clause 3.3.2.8 and Clause 3.9.3.1; and

(e) as short as practicable.

*

4.3.3.2 *Socket-outlets*

Socket-outlets supplied by installation couplers shall meet the following requirements:

(a) The socket-outlet shall be suitable for the intended application and comply with Clause 4.4.

(b) The socket-outlet shall be secured in position and installed in accordance with Clauses 4.4.2.1 and 4.4.2.2.

(c) When installed on a horizontal surface, socket-outlets shall be designed or arranged to prevent the accumulation of dust or water in accordance with Clause 1.5.4.

(d) Where installed in a location that is not readily accessible, the socket-outlet shall be securely fixed to a structure or support to ensure that no mechanical strain is placed on the installation wiring connections when inserting or removing a plug from the socket-outlet.

4.3.4 Socket-outlets in installation wiring

The installation wiring of the electrical installation shall terminate at a suitable socket-outlet, the wiring to the electrical equipment being continued by means of a plug and flexible cord or cable (see Figure 4.6).

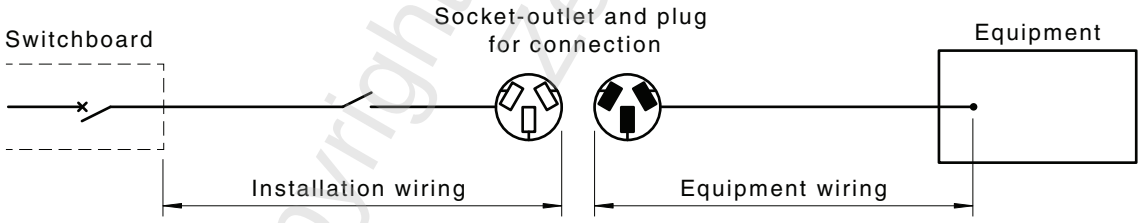

FIGURE 4.6 CONNECTION BY SOCKET-OUTLET

4.3.5 Other connecting devices

Where wiring terminates at a suitable junction box, ceiling rose or terminating device for the connection of a specific item or items of equipment, the wiring from the connecting device to the electrical equipment is considered to be equipment wiring (see Figure 4.7).

auto login of Electrical Workers Licensing Group is licenced to temporarily download this document.
Electrical Workers Licensing Group may print this document but not more than 10% of the documents subscribed to may be held in printed form at any one time.

Copyright Standards New Zealand

auto login of Electrical Workers Licensing Group is licenced to temporarily download this document.
Electrical Workers Licensing Group may print this document but not more than 10% of the documents subscribed to may be held in printed form at any one time.

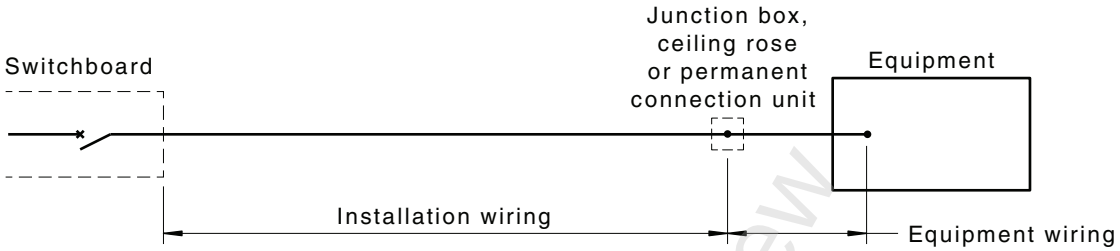

FIGURE 4.7 CONNECTION BY OTHER CONNECTING DEVICES

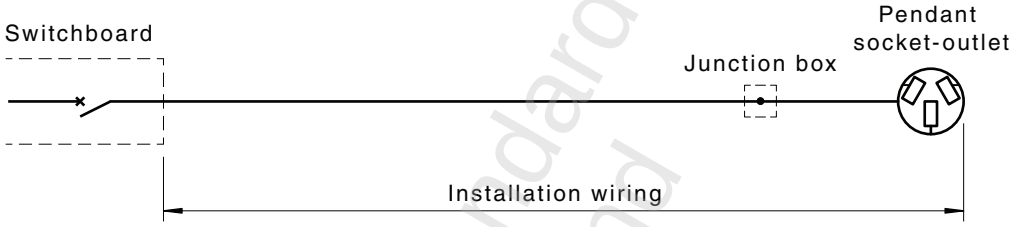

FIGURE 4.8 EQUIPMENT WIRING—EXCEPTION FOR PENDANT SOCKET-OUTLET

4.3.6 Equipment wiring

Equipment wiring shall comply with the following:

(a) Be as short as practicable.

NOTE: A maximum flexible cord or cable length of 2.5 m is recommended.

(b) Have a current-carrying capacity not less than the maximum load of the connected appliance or luminaire.

NOTE: The minimum cross-sectional area of 0.75 mm^2 for flexible cords is recommended, other than those specified for portable or hand-held appliances and luminaires.

(c) Be protected against short-circuit, in accordance with Clause 2.5.4.

(d) Where earthing is required, be provided with a protective earthing conductor of suitable cross-sectional area that will ensure operation of the circuit protective device, in the event of a fault to earth, without damage to the protective earthing conductor.

* (e) Installation wiring connected within a luminaire or passing through a luminaire shall be so selected and erected that the wiring and any associated connections within the luminaire will not suffer damage or deterioration due to heat or UV radiation generated by the luminaire or its lamps.

COPYRIGHT

Exceptions:

1 *Where an assessment is made of the effect of a fault in the electrical equipment and smaller conductors will meet the protection requirements, conductors with a cross-sectional area of not less than 20% of the rating of the circuit protective device may be used.*

2 *Wiring between a terminating device and a pendant socket-outlet is considered to be installation wiring (see Clause 3.9.7.4 and Figure 4.8).*

4.4 SOCKET-OUTLETS

4.4.1 Types

4.4.1.1 *General*

4.4.1.1.1 *Socket-outlets—Application*

Socket-outlets shall be suitable for the intended application and location of installation and shall comply with the requirements of the following Standards or Standards equivalent thereto:

* (a) AS/NZS 3112 or AS/NZS 60884.1.

(b) AS/NZS 3123.

(c) IEC 60309.

(d) AS/NZS 3131.

* **4.4.1.1.2** *Socket-outlets—Alternative pin configurations*

Socket-outlets with alternative pin configurations, e.g. UK, French, German and USA types, shall only be used under the following conditions:

(a) The socket-outlet shall be of the single set of apertures with an earthing contact and comply with the national Standard of the country, as shown in IEC/TR 60083. Single set of pin apertures of socket-outlets that accept multiple pin configurations shall not be used.

Exception: Shaver socket-outlets complying with AS/NZS 3194.

(b) The installation of the socket-outlet shall comply with Clause 4.4.4.

(c) The socket-outlet shall be rated at the voltage of the electrical installation, unless supplied at a lower voltage, in which case it may be rated at that lower voltage.

(d) Socket-outlets with alternative pin configurations normally supplying a voltage less than that of the electrical installation shall be supplied at that lower voltage.

(e) The socket-outlet shall have been tested to the equivalent of the requirements of the Standards listed in Clause 4.4.1.1.1, Items (a), (b), (c) and (d) above.

Copyright Standards New Zealand

auto login of Electrical Workers Licensing Group is licenced to temporarily download this document.
Electrical Workers Licensing Group may print this document but not more than 10% of the documents subscribed to may be held in printed form at any one time.

In New Zealand only, the following additional provisions apply. NZ

(i) Socket-outlets with alternative pin aperture configurations shall be used only in—

(A) facilities directly associated with an international airport; or

(B) residential areas of non-domestic electrical installations providing accommodation for international visitors or guests.

(ii) Socket-outlets with alternative pin configurations detailed in IEC TR 60083 as requiring a nominal voltage of 230 V supply, shall be protected by an RCD with a maximum rated residual current of 10 mA and by an AFDD.

NOTES:

A1 1 These RCDs need not be Type I as used for electrical medical devices.

2 Requirements for installation of AFDDs are in Clause 2.9, and further guidance is in Appendix O.

(iii) Socket-outlets with alternative pin configurations detailed in IEC TR 60083 as requiring a nominal voltage of 110 V supply shall be supplied at reduced low voltage.

NOTE: Reduced low voltage is defined in Clause 2.6.3.3.2.

* **4.4.1.1.3** *Low voltage fixed socket-outlet*

A low voltage fixed switch or socket-outlet, or its faceplate, shall not incorporate a connecting device for telecommunications, data, television, radio or other similar wiring systems.

NOTE: USB charging socket-outlets on the faceplate are acceptable.

4.4.1.2 *Different systems*

Where an ELV electrical installation and an electrical installation of greater than ELV are in the same premises, all socket-outlets supplied at ELV shall—

(a) have their voltage conspicuously marked; and

(b) be of a form that will prevent insertion of an ELV plug into a socket-outlet connected to a circuit of greater than extra-low voltage.

NOTE: AS/NZS 3112 contains a specific plug and socket-outlet arrangement recommended for ELV applications.

Plugs and socket-outlets for SELV and PELV systems shall not be provided with an earthing contact or pin and shall comply with Clause 7.5.10.

* **4.4.1.3** *Socket-outlets for electric vehicle charging*

NOTE: Information for the installation and location of socket-outlets for electric vehicle charging stations is provided in Appendix P.

In New Zealand only, requirements for the installation and location of socket-outlets for electric vehicle charging stations are provided in Clause 7.9. NZ

COPYRIGHT

auto login of Electrical Workers Licensing Group is licenced to temporarily download this document.
Electrical Workers Licensing Group may print this document but not more than 10% of the documents subscribed to may be held in printed form at any one time.

Copyright Standards New Zealand

4.4.2 Location

4.4.2.1 *Accessibility*

Each socket-outlet shall be installed so that any plug intended to be used with the socket-outlet can be conveniently inserted and withdrawn and not cause damage to any flexible cord or cable connected to the plug.

Socket-outlets shall not be installed where the withdrawal of a plug from the socket-outlet is restricted by a permanent fixture or fitting within the installation.

The AS/NZS 5601 series requires that the means of electrical isolation for a gas appliance is accessible with the appliance installed.

4.4.2.2 *Protection of socket-outlets*

Socket-outlets shall be installed so that they will not be subjected to undue mechanical stress or damage in normal service.

In addition, the following applies:

(a) Where installed in a floor or other horizontal surface, socket-outlets shall be designed or arranged to prevent the accumulation of dust or water therein.

* NOTE: AS/NZS 3112 and AS/NZS 60884.1 contain requirements for socket-outlets intended to be mounted in a floor.

(b) Where installed within 75 mm of a floor, socket-outlets shall be installed so that any plug used with the socket-outlet is withdrawn in the horizontal plane.

Exception: This requirement does not apply to a socket-outlet that complies with Items (a) and (d).

(c) Socket-outlets shall be so installed that a plug is not likely to become loose or to malfunction because of gravity, vibration or the weight of the flexible cord or cable.

(d) Where installed in a location that is not readily accessible for the connection of a fixed or stationary appliance or a luminaire, the socket-outlet shall be securely fixed to a structure or support to ensure that no mechanical strain is placed on the installation wiring connections when inserting or removing a plug from the socket-outlet.

Exceptions: The socket-outlet need not be fixed in position where the installation meets the following conditions:

1 Cable connections are not subject to undue mechanical stress on any connection in accordance with Clause 3.7.2.6.

2 The wiring system, where likely to be disturbed, is supported in accordance with Clause 3.9.3.3.

3 The wiring system, where installed in a suspended ceiling, is supported in accordance with Clause 3.9.3.2.

COPYRIGHT

Copyright Standards New Zealand

auto login of Electrical Workers Licensing Group is licenced to temporarily download this document.
Electrical Workers Licensing Group may print this document but not more than 10% of the documents subscribed to may be held in printed form at any one time.

4 Conductors are flexible or stranded type.

5 Insulated, unsheathed cables, including exposed cores where sheathing is removed, are enclosed in accordance with Clause 3.10.1.1.

(e) The use and location of socket-outlets is restricted in a number of particular situations, including adjacent to damp situations, in accordance with Section 6 and hazardous areas and other situations, in accordance with Section 7.

(f) Where socket-outlets are installed in building surfaces that are required to provide fire-resistance or acoustic properties, measures shall be taken to ensure that these properties are maintained.

NOTE: Clause 4.2.2.6 and the national building codes have requirements for the installation of socket-outlets in building surfaces providing fire-resistance or acoustic properties.

4.4.3 Earthing contacts

Every socket-outlet shall be provided with an earthing contact.

NOTE: See Clause 5.4.2 for earthing requirements.

Exception: In accordance with Clause 7.5.10, socket-outlets for SELV and PELV systems shall not be provided with an earthing contact.

4.4.4 Switching device

4.4.4.1 *General*

Each socket-outlet shall be individually controlled by a separate switch that complies with either AS/NZS 3133, AS/NZS 60669.1 or AS/NZS 60947.3 and operates in all active conductors.

Switches controlling socket-outlets shall comply with Clauses 4.4.4.2 and 4.4.4.3.

Exceptions:

1 A single switch may be used for the control of two socket-outlets located immediately adjacent to each other.

2 A socket-outlet that is rated at not more than 10 A, installed for the connection of a fixed or stationary appliance or a luminaire and that is not readily accessible for other purposes, need not be controlled by a switch.

3 A socket-outlet that is switched by the insertion and withdrawal of the plug is deemed to meet the requirements of this Clause.

4.4.4.2 *Rating*

Each switch shall have a current rating, at its operating voltage, not less than the current rating of the socket-outlet it controls.

COPYRIGHT

Copyright Standards New Zealand

auto login of Electrical Workers Licensing Group is licenced to temporarily download this document.
Electrical Workers Licensing Group may print this document but not more than 10% of the documents subscribed to may be held in printed form at any one time.

Where a single switch is used to control two socket-outlets, as permitted by Exception 1 to Clause 4.4.4.1, the current rating of the switch shall be not less than—

(a) the total current rating of the socket-outlets; or

(b) the current rating of the overcurrent protective device on the circuit,

whichever is the lesser value.

4.4.4.3 *Location and marking*

Each switch, or means of operating the switch, for a socket-outlet shall be—

(a) as close as practicable to the socket-outlet; and

(b) marked to indicate the socket-outlet(s) or the connected electrical equipment that it controls.

Exception: Marking is not required where the socket-outlet controlled is obvious because of the location of the switch.

Where the switch is located remote from the socket-outlet—

(i) it shall be installed in a convenient and readily accessible position as close as practicable to the socket-outlet;

(ii) the location of the switch shall be clearly and permanently marked at the socket-outlet; and

(iii) both the switch and the socket-outlet shall be provided with legible, indelible and uniform labels indicating their relationship.

Exception: Marking is not required where the socket-outlet is—

(a) located more than 2.5 m above the ground, floor or platform; and

(b) provided for the connection of a specific lamp, luminaire or appliance; and

(c) not accessible for general use.

4.4.4.4 *Pendant-type socket-outlet*

A switch incorporated in a pendant-type socket-outlet attached to a flexible cord shall interrupt all live (active and neutral) conductors.

Exception: Pendant-type multiphase outlets with switching only in the active conductors may be used where—

(a) the outlet is not dependent on the supply cable for support; and

(b) additional mechanical protection is provided where necessary; and

(c) the supply cable or cord is selected to take into account any likelihood of vibration and movement expected during operation.

Copyright Standards New Zealand

auto login of Electrical Workers Licensing Group is licenced to temporarily download this document.
Electrical Workers Licensing Group may print this document but not more than 10% of the documents subscribed to may be held in printed form at any one time.

4.4.5 Polarization and phase sequence

Where socket-outlets of the same type form part of an electrical installation, the order of connection of the socket-outlets shall be the same.

All socket-outlets that accommodate three-pin/flat-pin plugs shall be connected so that, when viewed from the front of the socket-outlet, the order of connection commencing from the slot on the radial line shall be earth, active, neutral in a clockwise direction.

4.5 LIGHTING EQUIPMENT AND ACCESSORIES

* **4.5.1 Lampholders, including lampholders incorporated in a luminaire**

4.5.1.1 *Location*

All lampholders shall be located to be adequately protected against damage that might reasonably be expected.

In order to protect against inadvertent contact with live parts, low voltage lampholders shall be located to minimize the risk of—

(a) direct contact with live parts of a lampholder when the lamp is removed; and

(b) mechanical damage to the lamp or lampholder.

These requirements may be satisfied by—

(i) installation not less than 1.8 m above the ground, floor or platform; or

(ii) provision of a suitable guard for the lamp and its lampholder.

A pendant lampholder shall not be exposed to the effects of significant movement of air, e.g. outdoors or where exposed to the operation of fans, etc.

4.5.1.2 *Edison screw lampholders*

Every low voltage Edison screw lampholder shall be connected to the supply so that, where a neutral conductor is required, it is connected to the outer contact.

Exception: This requirement need not apply where an Edison screw lampholder is incorporated in an appliance in a manner permitted by the AS/NZS 60335 series or the AS/NZS 3350 series, or the luminaire and the lampholder is provided with a shroud or skirt that prevents contact with the outer contact.

4.5.1.3 *Festoon lighting*

Festoon lighting shall be located and supported so that no lamp will be within—

(a) 0.15 m of flammable materials or structural metalwork; or

(b) arm's reach of the ground or any other place on which a person is likely to stand.

COPYRIGHT

Copyright Standards New Zealand

auto login of Electrical Workers Licensing Group is licenced to temporarily download this document.
Electrical Workers Licensing Group may print this document but not more than 10% of the documents subscribed to may be held in printed form at any one time.

Exception: Festoon lighting may be within arm's reach where installed immediately below a ceiling.

4.5.2 Lamps and luminaires

4.5.2.1 *General*

Lamps, luminaires and their associated ancillary gear shall be installed so as not to cause undue temperature rise, ignition or deterioration of the materials—

(a) on which they are mounted; or

(b) that they illuminate.

Luminaires shall—

(i) be suitable for the highest temperatures to which they are likely to be subjected by external influences; and

(ii) be installed in accordance with the manufacturer's instructions, taking account of the highest rating of lamp to be used.

NOTES:

1 Some building materials can be affected by pyrolysis—the decomposition of organic material as a result of long-term exposure to elevated temperatures. Where exposed to high temperatures for a significant period of time, such materials can self-ignite.

2 Attention is drawn to the high temperatures that can be generated in luminaires. Cables with suitable insulation temperature ratings should be selected.

4.5.2.2 *Lamps near flammable materials*

Where lamps are located near flammable materials—

(a) lamps shall be suitably shielded by a shade, reflector, guard or enclosure to prevent contact with the material; and

(b) lamps, such as spotlights, that generate heat in the illuminated surface, shall be separated by such a distance that the material will not attain excessive temperature.

Where information is not otherwise provided with products, the minimum separation distances given in Table 4.2 shall be used.

Flammable shades shall not be installed where they are liable to come in contact with any lamp.

Copyright Standards New Zealand

auto login of Electrical Workers Licensing Group is licenced to temporarily download this document.
Electrical Workers Licensing Group may print this document but not more than 10% of the documents subscribed to may be held in printed form at any one time.

TABLE 4.2

MINIMUM DISTANCE BETWEEN LAMP AND ILLUMINATED FLAMMABLE MATERIALS

Rating W	Minimum distance m
≤100	0.6
>100 ≤300	1.0
>300	1.8

4.5.2.3 *Recessed luminaires*

4.5.2.3.1 *General requirements*

(a) Recessed luminaires and their auxiliary equipment shall be installed in a manner designed to prevent—

(i) excessive temperature rise of the luminaire and auxiliary equipment; and

(ii) the risk of fire from ignition of combustible materials.

(b) The requirement in (a) shall be satisfied by one of the following methods:

(i) The installation of a luminaire designed and certified by the manufacturer as being suitable for operation—

(A) in contact with combustible materials; or

(B) in contact with, or enclosed/covered by, thermal insulation material.

(ii) The installation of a luminaire in combination with a barrier tested and classified in accordance with AS/NZS 5110 as being suitable for the installation conditions.

(iii) The installation of a luminaire with separation from thermal insulating materials, combustible building elements and loose combustible materials not less than—

(A) the minimum clearance specified by the manufacturer of the luminaire, which may require a barrier or guard constructed of fire-resistant materials; or

(B) the default clearances as specified in Figure 4.9, which may require a barrier or guard constructed of fire-resistant materials.

auto login of Electrical Workers Licensing Group is licenced to temporarily download this document.
Electrical Workers Licensing Group may print this document but not more than 10% of the documents subscribed to may be held in printed form at any one time.

Copyright Standards New Zealand

A1

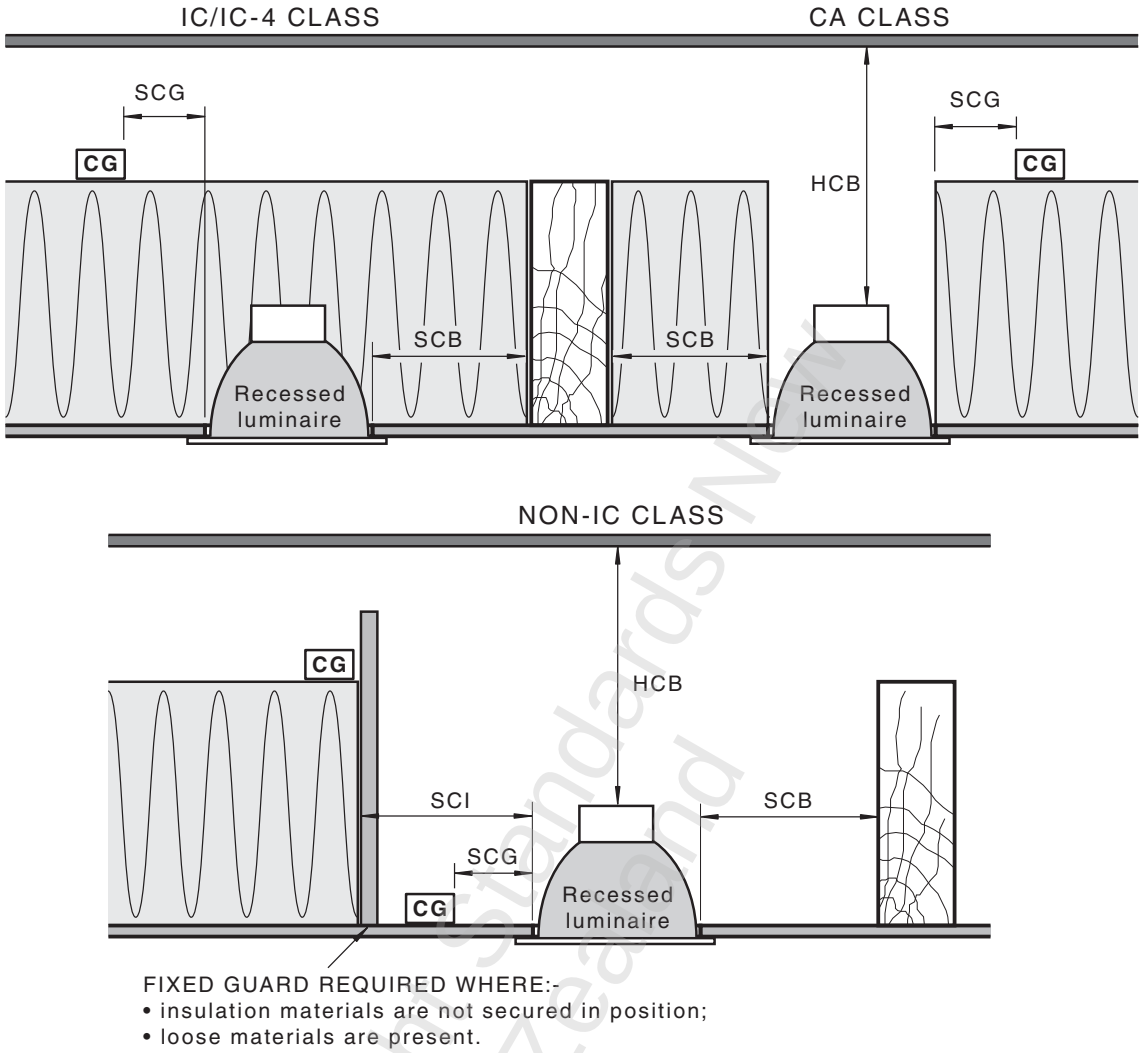

Dimension	Any lamp up to 100 W
HCB—height clearance to building element	100 mm
SCB—side clearance to building element	100 mm
SCI—side clearance to insulation	100 mm
SCG—side clearance to auxiliary equipment [control gear (CG)]	50 mm

FIGURE 4.9 DEFAULT MINIMUM CLEARANCES FOR RECESSED LUMINAIRES

Copyright Standards New Zealand

auto login of Electrical Workers Licensing Group is licenced to temporarily download this document.
Electrical Workers Licensing Group may print this document but not more than 10% of the documents subscribed to may be held in printed form at any one time.

4.5.2.3.2 *Warning sign*

Where recessed luminaires are installed in an accessible roof space, a permanent and legible warning sign shall be installed in the roof space adjacent to the access point, in a position that is visible to a person entering the space. The sign shall contain the words shown in Figure 4.10 with a minimum size of lettering of 10 mm.

* *Exception: Where all recessed luminaires installed in an accessible roof space are of either IC or IC-4 classification the warning sign is not required.*



FIGURE 4.10 WORDING FOR WARNING SIGN TO BE INSTALLED IN ACCESSIBLE ROOF SPACES CONTAINING RECESSED LUMINAIRES

* **4.5.2.3.3** *Installation*

(a) The following requirements shall be undertaken for the installation of recessed luminaires:

(i) Suitably designed and certified recessed luminaires have installation classifications and shall be marked accordingly. The manufacturer's instructions shall provide all details in regard to restrictions for installation in certain applications.

A1 (ii) In New Zealand only, unmarked light fittings shall be treated as 'Do-not-cover'. For these typical fittings, the installation method shall be to provide barriers [see method in Clause 4.5.2.3.1(b)(ii)] or clearances [see method in Clause 4.5.2.3.1(b)(iii)] during installation, so as to prevent contact with materials that may impede airflow (e.g. thermal insulation) or that may be affected by the high temperature (e.g. combustible building elements and insulation). NZ

COPYRIGHT

Copyright Standards New Zealand

auto login of Electrical Workers Licensing Group is licenced to temporarily download this document.
Electrical Workers Licensing Group may print this document but not more than 10% of the documents subscribed to may be held in printed form at any one time.

(iii) Where building insulation is already fitted and recessed luminaires are retrofitted, added or altered, precautions shall be taken during the installation of the luminaire so as not to compromise the safety of the installation.

NOTES:

1 In New Zealand, under the New Zealand Building Code, building insulation is required. NZ

2 Instructions for insulation installers in relation to clearances from recessed luminaires and other types of electrical equipment that may be adversely affected by lack of cooling air circulation are included in AS 3999 in Australia and in New Zealand NZS 4246.

(iv) The presence of bulk thermal insulation, particularly over the rear of a ceiling-mounted recessed luminaire, can readily impair cooling air circulation.

Unless the recessed luminaire manufacturer specifies otherwise [see method in Clause 4.5.2.3.1(b)(i)] or the barrier is classified to permit insulation coverage [see method in Clause 4.5.2.3.1(b)(ii)], the space above the luminaire shall remain clear. This space is shown as dimension HCB in Figure 4.9.

(v) Where clearances are to be applied [see method in Clause 4.5.2.3.1(b)(iii)] and bulk thermal insulation is not fixed in position, one of the following means shall be provided and secured in position to maintain the clearances:

(A) A barrier complying with AS/NZS 5110.

(B) A guard complying with AS 3999.

(C) A barrier or guard constructed of fire-resistant materials.

(vi) Unless the auxiliary equipment instructions permit otherwise, any auxiliary equipment operating at a high temperature shall be installed above any insulation as illustrated in Figure 4.9.

(vii) If the recessed luminaire is supplied with a detachable barrier, the complete luminaire, including its barrier, shall be installed.

(viii) For recessed luminaires with lamps of wattage higher than 100 W, only the methods in Clause 4.5.2.3.1(b)(i) or 4.5.2.3.1(b)(iii), shall be used.

(ix) Combustible materials shall be prevented from being in close proximity or contacting hot surfaces of the recessed luminaires. This includes structural timber which may be affected by pyrolysis which over a long exposure can result in increased susceptibility to ignition.

auto login of Electrical Workers Licensing Group is licenced to temporarily download this document.
Electrical Workers Licensing Group may print this document but not more than 10% of the documents subscribed to may be held in printed form at any one time.

Copyright Standards New Zealand

Where extraneous material, such as leaves, vermin debris or combustible materials stored in a roof space, are present in proximity to the recessed luminaire, the precautions shall include the use of a suitably designed and certified recessed luminaire [see method in Clause 4.5.2.3.1(b)(i)] or a barrier [see method in Clause 4.5.2.3.1(b)(ii)].

(x) Bulk thermal insulation may also be retrofitted, added or altered, in which case precautions shall be applied by the insulation installer, where recessed luminaires are present, or the luminaire installer, where insulation is present.

(b) The following precautions should be considered for the installation of recessed luminaires:

(i) The heat generated from lamps should be dissipated in order to prevent overtemperature damage to the luminaire or to adjacent materials. Cooling air circulation through or around the equipment is a requirement for the typical range of recessed luminaires.

AS/NZS 60598.1, AS/NZS 60598.2 and AS/NZS 5110 detail the test method and the maximum surface temperatures permitted for recessed luminaires or barriers. Those standards permit a maximum temperature of adjacent materials to be no more than 90°C.

(ii) Under National Construction Code requirements, bulk thermal insulation is prevalent in modern building construction within roofs, ceilings, walls and floors depending on the type of building and its climate zone.

AS 3999 (in Australia) and NZS 4246 (in New Zealand) include instructions for insulation installers in relation to clearances from recessed luminaires and other types of electrical equipment that may be adversely affected by lack of cooling air circulation.

* **4.5.2.3.4** *Classifications of recessed luminaires*

Recessed luminaires are classified as follows by AS/NZS 60598.2.2:2016, Appendix ZZ:

(a) *Non-IC luminaire* A recessed luminaire that cannot be abutted against or covered by normally flammable materials or used in installations where building insulation or debris are, or may be, present in normal use.

Non-IC luminaires shall not be installed in residential installations. Refer to Clause 4.5.2.3.5.

Non-IC luminaires complying with AS/NZS 60598.2.2 are marked with the symbol shown in Figure 4.11.

COPYRIGHT

Copyright Standards New Zealand

auto login of Electrical Workers Licensing Group is licenced to temporarily download this document.
Electrical Workers Licensing Group may print this document but not more than 10% of the documents subscribed to may be held in printed form at any one time.

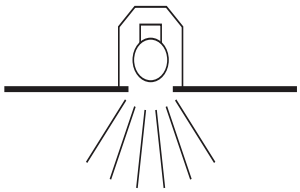

FIGURE 4.11 NON-IC SYMBOL

(b) *Do-not-cover luminaire* A recessed luminaire that can be used where normally flammable materials, including building insulation, are, or may be, present, but cannot be abutted against any material and cannot be covered in normal use.

In New Zealand only, 'Do-not-cover' luminaires shall not be installed in residential installations. Refer to Clause 4.5.2.3.5. NZ

'Do-not-cover' luminaires complying with AS/NZS 60598.2.2 are marked with the symbol shown in Figure 4.12.

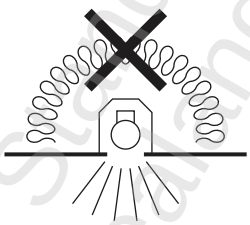

FIGURE 4.12 DO-NOT-COVER SYMBOL

(c) *CA90 luminaire* A recessed luminaire that can be abutted against normally flammable materials, including building insulation, but cannot be covered in normal use. Building elements, building insulation or debris have limited access to the heated parts of the luminaire.

CA90 luminaires complying with AS/NZS 60598.2.2 are marked with the symbol shown in Figure 4.13.

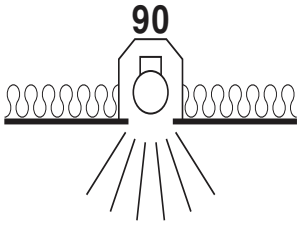

FIGURE 4.13 CA90 SYMBOL

COPYRIGHT

Copyright Standards New Zealand

auto login of Electrical Workers Licensing Group is licenced to temporarily download this document.
Electrical Workers Licensing Group may print this document but not more than 10% of the documents subscribed to may be held in printed form at any one time.

(d) *CA135 luminaire (New Zealand only)* A recessed luminaire that can be abutted against normally flammable materials, including building insulation, but cannot be covered in normal use. Building elements, building insulation or debris have some access to the heated parts of the luminaire. NZ

In New Zealand only, CA135 luminaires complying with AS/NZS 60598.2.2 are marked with the symbol shown in Figure 4.14.

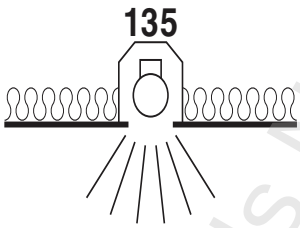

FIGURE 4.14 CA135 SYMBOL

(e) *IC luminaire* A recessed luminaire that can be abutted against normally flammable materials, including building insulation, and can be covered in normal use. Building elements, building insulation or debris have access to the heated parts of the luminaire.

IC luminaires complying with AS/NZS 60598.2.2 are marked with the symbol shown in Figure 4.15.

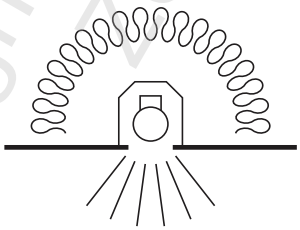

FIGURE 4.15 IC SYMBOL

(f) *IC-4 luminaire* A recessed luminaire that can be abutted against normally flammable materials, including building insulation, and can be covered in normal use. Building elements, building insulation or debris have restricted access to the heated parts of the luminaire. This classification of recessed luminaire is effectively a sealed unit that has a restricted flow of air between the habitable room the luminaire emits light into and the void/space where the main body of the luminaire is located.

Copyright Standards New Zealand

auto login of Electrical Workers Licensing Group is licenced to temporarily download this document.
Electrical Workers Licensing Group may print this document but not more than 10% of the documents subscribed to may be held in printed form at any one time.

IC-4 luminaires complying with AS/NZS 60598.2.2 are marked with the symbol shown in Figure 4.16.

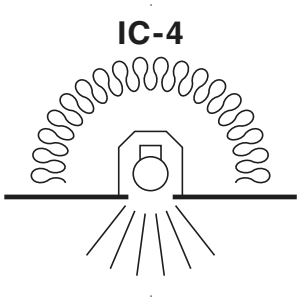

FIGURE 4.16 IC-4 SYMBOL

4.5.2.3.5 *Requirements for specific classifications*

Recessed luminaires of classifications compliant to Appendix ZZ of AS/NZS 60598.2.2 shall be installed as per the following:

(a) In Australia only: **A**

A1

(i) In residential installations, only Do-not-cover, CA90, IC or IC-4 luminaires shall be installed.

(ii) In non-residential installations, only Non-IC, Do-not-cover, CA90, IC or IC-4 luminaires shall be installed.

CA135 luminaires shall not be installed in residential or non-residential installations.

(b) In New Zealand only: **NZ**

A1

(i) In residential installations, only CA90, CA135, IC or IC-4 luminaires shall be installed.

(ii) In non-residential installations, only Non-IC, Do-not-cover, CA90, CA135, IC or IC-4 luminaires shall be installed.

NOTE: Table 4.3 provides information and guidance on the classifications, symbols, applications and general restrictions on recessed luminaires.

A1

Exception: Luminaires of classes specified by Amendment A to AS/NZS 60598.2.2:2001, and labelled accordingly, may be installed as if they were classified under Appendix ZZ of AS/NZS 60598.2.2:2016 edition, as follows:

(a) CA 80 may be treated as CA 90.

(b) CA 135 may be treated as CA 135.

(c) IC may be treated as IC.

(d) IC-F may be treated as IC-4.

auto login of Electrical Workers Licensing Group is licenced to temporarily download this document.
Electrical Workers Licensing Group may print this document but not more than 10% of the documents subscribed to may be held in printed form at any one time.

Copyright Standards New Zealand

TABLE 4.3

* GUIDE TO RECESSED LUMINAIRE CLASSIFICATION, APPLICATION AND GENERAL RESTRICTIONS ON USE

Type	Abutted(1)	Normal use(2)—covered	Use with insulation(3)	Accessibility to high temperature parts(4)	Surface of luminaire normal operating temperature limit	Comments
Non-IC	No	No	No	Fully accessible	No limit on side or top surface of luminaire Mounting surface of luminaire limited to 90°C	**Not for residential use, intended for non-residential use only** Non-IC luminaires are prohibited in residential dwellings or other places where building insulation may be installed (now or in the future) These luminaires have not been tested to show they are safe for use with building insulation
Do-not-cover	No	No	Yes	Fully accessible	No limit on side or top surface of luminaire Mounting surface of luminaire limited to 90°C	**Suitable for residential or non-residential use in Australia** **Prohibited from installation in residential locations in New Zealand** Cannot be covered Clearance distances from sides of luminaire to insulation and clearance above luminaire are to be in installation instructions supplied with the luminaire and have to be adhered to for correct installation

(*continued*)

COPYRIGHT

Copyright Standards New Zealand

auto login of Electrical Workers Licensing Group is licenced to temporarily download this document.
Electrical Workers Licensing Group may print this document but not more than 10% of the documents subscribed to may be held in printed form at any one time.

TABLE 4.3 (*continued*)

Type	Abutted[1]	Normal use[2]—covered	Use with insulation[3]	Accessibility to high temperature parts[4]	Surface of luminaire normal operating temperature limit	Comments
						These luminaires have been tested to show they are safe for use with building insulation present (observing manufacturer's stated installation clearance distances) They are not to be covered in building insulation; however, have been tested to show if inadvertently covered they should not become a fire hazard
CA90	Yes	No	Yes	**Limited access** In this Standard, this is assessed for access to high temperature parts by use of a 5.6 mm probe to side and top of luminaire	90°C limit on side or top or mounting surface of luminaire	**Suitable for residential or non-residential use in Australia and New Zealand** Cannot be covered Insulation can be placed against the sides of the luminaire Manufacturer's clearance above luminaire to be observed for correct installation These luminaires have been tested to show they are safe for use with building insulation present and placed against the sides of the luminaire They are not to be covered in building insulation; however, have been tested to show if inadvertently covered they should not become a fire hazard

(*continued*)

COPYRIGHT

Copyright Standards New Zealand

auto login of Electrical Workers Licensing Group is licenced to temporarily download this document.
Electrical Workers Licensing Group may print this document but not more than 10% of the documents subscribed to may be held in printed form at any one time.

TABLE 4.3 (*continued*)

Type	Abutted(1)	Normal use(2)—covered	Use with insulation(3)	Accessibility to high temperature parts(4)	Surface of luminaire normal operating temperature limit	Comments
CA135	Yes	No	Yes	**Some access** In this Standard, this is assessed for access to high temperature parts by use of a 50 mm probe to side and top of luminaire	135°C limit on side or top surface of luminaire Mounting surface of luminaire limited to 90°C	**Not permitted for use in Australia** **New Zealand only—suitable for residential or non-residential use** Cannot be covered Insulation can be placed against the sides of the luminaire Manufacturer's clearance above luminaire to be observed Cannot be used where building materials or insulation is not rated for exposure to constant temperatures of 135°C (cannot have such materials that may be placed so as to be touching the sides of the luminaire) These luminaires have been tested to show they are safe for use with building insulation present and placed against the sides of the luminaire They are not to be covered in building insulation; however, have been tested to show if inadvertently covered they should not become a fire hazard

(*continued*)

COPYRIGHT

Copyright Standards New Zealand

auto login of Electrical Workers Licensing Group is licenced to temporarily download this document.
Electrical Workers Licensing Group may print this document but not more than 10% of the documents subscribed to may be held in printed form at any one time.

TABLE 4.3 (*continued*)

Type	Abutted[1]	Normal use[2]—covered	Use with insulation[3]	Accessibility to high temperature parts[4]	Surface of luminaire normal operating temperature limit	Comments
IC	Yes	Yes	Yes	**Limited access** In this Standard, this is assessed for access to high temperature parts by use of a 5.6 mm probe to sides and top of luminaire	90°C limit on side or top or mounting surface of luminaire	**Suitable for residential or non-residential use in Australia and New Zealand** Used where some air transfer is allowed or desired between living space and roof space (there will be some air transfer between the spaces if the luminaire is not fully covered in insulation) These luminaires have been tested to show they are safe in normal use when covered in building insulation and abutted to combustible building elements
IC-4	Yes	Yes	Yes	**Restricted access** In this Standard, this is assessed for access to high temperature parts by use of a IP4X—1 mm probe to sides and top and front face of luminaire	90°C limit on side or top or mounting surface of luminaire	**Suitable for residential or non-residential use in Australia and New Zealand** Used where air transfer is not permitted or not desired between living space and roof space (there will be no air transfer between spaces even if there is no insulation covering the luminaire) Typical use is passive house design where no air transfer is allowed These luminaires have been tested to show they are safe in normal use when covered in building insulation and abutted to combustible building elements

(*continued*)

COPYRIGHT

Copyright Standards New Zealand

auto login of Electrical Workers Licensing Group is licenced to temporarily download this document.
Electrical Workers Licensing Group may print this document but not more than 10% of the documents subscribed to may be held in printed form at any one time.

TABLE 4.3 (*continued*)

Type	Abutted[1]	Normal use[2]—covered	Use with insulation[3]	Accessibility to high temperature parts[4]	Surface of luminaire normal operating temperature limit	Comments
No marking	No	No	No	No		**Not verified as tested/compliant to Australian/New Zealand Standards** Marking is required by standard—no marking indicates non-compliance **Do not install any luminaire that does not have one of the marking symbols or instructions specifying any clearance distances**

NOTES:

1 May be abutted against normally flammable building elements or insulation.

2 Intended and tested to be used under building insulation as part of normal operation.

3 May be used where building insulation may be installed (now or in the future).

4 Classification and probe to determine access of insulation, etc. to high temperature parts.

COPYRIGHT

Copyright Standards New Zealand

auto login of Electrical Workers Licensing Group is licenced to temporarily download this document.
Electrical Workers Licensing Group may print this document but not more than 10% of the documents subscribed to may be held in printed form at any one time.

4.5.2.4 *Suspended ceilings*

Luminaires that are supported by a ceiling panel shall not—

(a) present a mechanical loading that exceeds the capacity of the ceiling panel; and

(b) operate at a temperature that would cause deformation, discolouration or other forms of deterioration of the ceiling panel.

NOTE: AS/NZS 2785 states that rigid infill panels or independent supports may be required for some panels. Refer to manufacturer's information for limitations on particular ceiling systems.

* 4.6 SMOKE ALARMS

National building codes and state legislation have requirements for installation of smoke alarms including location, number required and interconnection for alarm purposes.

Where mains-powered smoke alarms are fitted, such alarms may be directly connected to the lighting final subcircuit or to an individual final subcircuit.

NOTES:

1 Use of the lighting final subcircuit provides indication that the mains power supply is available, as a loss of supply to smoke alarms in an electrical installation would be indicated by the non-operation of lighting.

2 Smoke alarms are not considered to be safety services for the purposes of this Standard.

4.7 COOKING APPLIANCES

4.7.1 Switching device

A circuit for a fixed or stationary cooking appliance having an open cooking surface incorporating electric heating, e.g. a cooktop, deep fat fryer, barbecue griddle or similar, shall be provided with a switch, operating in all active conductors, mounted near the appliance in a visible and readily accessible position.

NOTE: This requirement need not apply to enclosed cooking appliances, such as built-in ovens and microwave ovens.

In Australia only, where the appliance has an open cooking surface incorporating both gas and electric cooking, the switching device shall operate in all live (active and neutral) conductors. **A**

In New Zealand only, where the appliance has an open cooking surface incorporating both gas and electric cooking, the switching device shall operate in all active conductors. **NZ**

A single switch is permissible for the control of associated cooking appliances that are in the same room.

COPYRIGHT

Copyright Standards New Zealand

auto login of Electrical Workers Licensing Group is licenced to temporarily download this document.
Electrical Workers Licensing Group may print this document but not more than 10% of the documents subscribed to may be held in printed form at any one time.

* The switch shall not be mounted on the cooking appliance.

NOTE: The switch should be mounted within 2 m of the cooking appliance.

The switch shall not be mounted in such a position that the user must reach across the open cooking surface to operate it.

Switches for cooking appliances, including the combined gas/electric cooking appliances specified in Clause 4.18.1, shall not be installed in the prohibited location specified in Clause 4.7.3 and Figure 4.17.

Switches shall be marked to identify the appliance controlled.

Exception: Where an electric cooking surface is installed in a public park or other open area, to prevent damage by vandalism, the switch may be installed under a lockable cover that is located so that it is able to be operated as required for servicing and maintenance purposes of the cooking surface.

4.7.2 Connection—New Zealand only NZ

In New Zealand only, a freestanding cooking appliance shall be connected to the electrical installation wiring by a socket-outlet or an installation coupler.

NOTE: This requirement need not apply to built-in hobs and ovens.

* 4.7.3 Clearance from open cooking surfaces

Socket-outlets and switches shall not be installed in the prohibited location shown in Figure 4.17, on any wall, cupboard or other surface within 150 mm of the edge of an open gas or electric cooking surface, in the area extending from the top of the cooking surface to a range hood, cupboard or ceiling located directly above the cooking surface, or 2.5 m above the floor that is directly below the cooking surface, whichever is the lower.

Copyright Standards New Zealand

auto login of Electrical Workers Licensing Group is licenced to temporarily download this document.
Electrical Workers Licensing Group may print this document but not more than 10% of the documents subscribed to may be held in printed form at any one time.

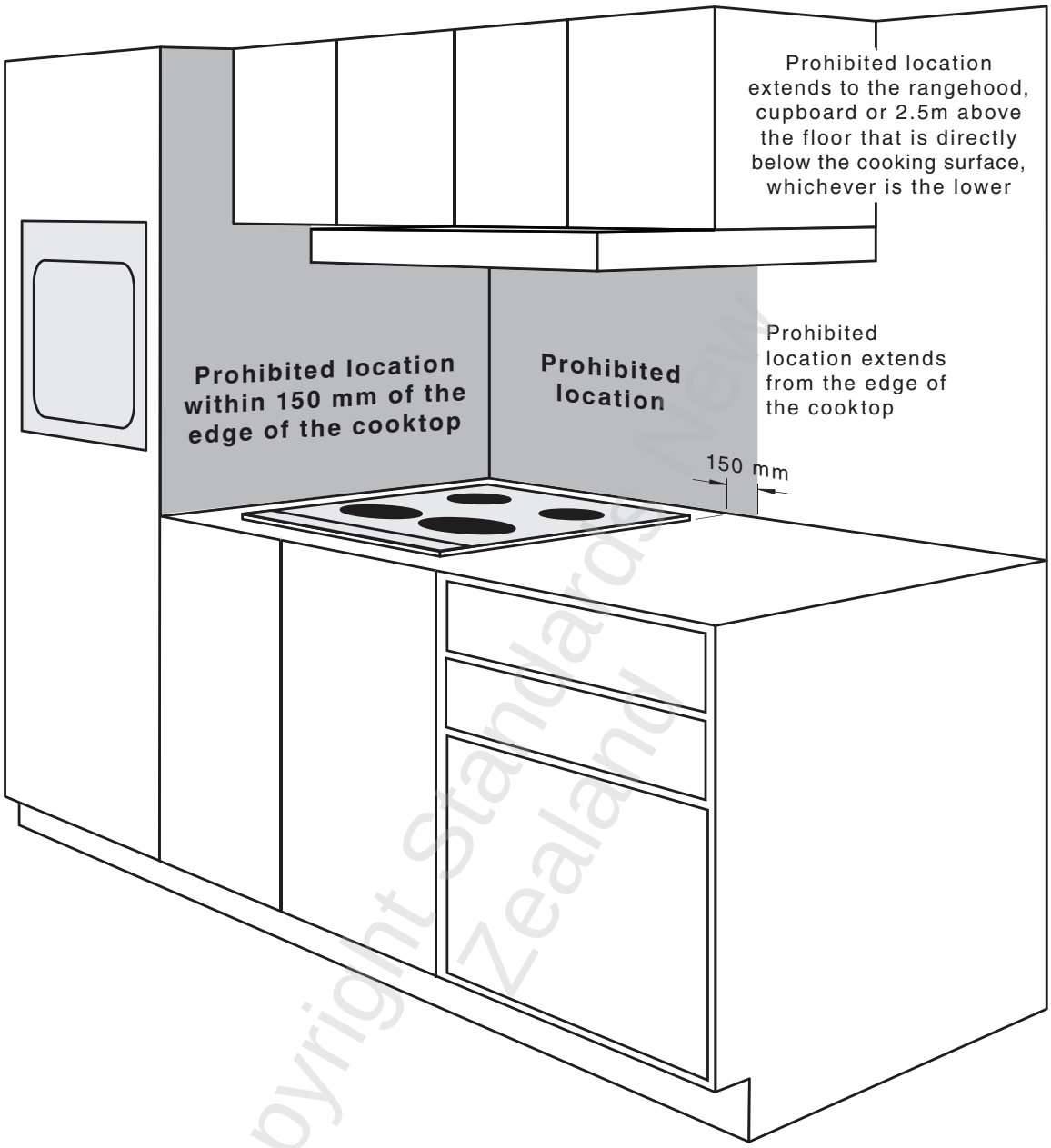

FIGURE 4.17 PROHIBITED LOCATION FOR SOCKET-OUTLETS AND SWITCHES INSTALLED NEAR OPEN COOKING SURFACES (GAS OR ELECTRIC)

4.8 APPLIANCES PRODUCING HOT WATER OR STEAM

4.8.1 General

All appliances producing hot water or steam shall be protected against overheating, by design or installation, in all service conditions.

Protection shall be provided by means of an appropriate non-self-resetting device, functioning independently of the thermostat.

COPYRIGHT

auto login of Electrical Workers Licensing Group is licenced to temporarily download this document.
Electrical Workers Licensing Group may print this document but not more than 10% of the documents subscribed to may be held in printed form at any one time.

Copyright Standards New Zealand

Exception: This requirement need not apply to appliances that comply as a whole with an appropriate Standard.

Where an appliance has no free outlet, it shall also be provided with a device that limits the water pressure.

A1 NOTE: Devices producing hot water or steam include, but are not limited to, boilers, storage hot water systems, instant hot water systems, spa heaters, swimming pool heaters, sauna heaters, hot drink appliances, etc. This Clause applies to such items regardless of whether electricity is the primary energy source. For example, a gas califont with electric ignition is a water heater.

4.8.2 Water heaters

4.8.2.1 *Access to easing equipment of pressure-relief and terminals of protective devices*

Every unvented water heater shall be installed so that the following are readily available for operation, inspection and adjustment:

(a) Easing equipment of pressure-relief devices.

(b) All terminals of the protective devices.

NOTE: An unvented water heater is one that is intended to operate at the pressure of the water system and the flow of the water being controlled by one or more valves in the outlet system.

4.8.2.2 *Protective devices fitted to unvented water heaters*

Overtemperature cut-outs and similar protective devices fitted to unvented water heaters shall—

(a) operate directly in the circuit wiring to the heater elements; and

(b) not be arranged for control through relays or contactors.

* **4.8.2.3** *Isolating switch*

A1 Every water heater that is direct connected shall be provided with an independent, isolating switch (lockable) in accordance with Clause 2.3.2.2. The isolating switch shall be—

(a) additional to any automatic switch incorporated in the heater structure; and

(b) installed adjacent to but not on the water heater.

Where a water heater is supplied by two or more final subcircuits, all of the final subcircuits for that water heater shall be capable of being isolated by a single isolating switch.

4.9 ROOM HEATERS

4.9.1 General

Where a permanently connected room heater, or a number of permanently connected room heaters, are installed in one room, an

COPYRIGHT

Copyright Standards New Zealand

auto login of Electrical Workers Licensing Group is licenced to temporarily download this document.
Electrical Workers Licensing Group may print this document but not more than 10% of the documents subscribed to may be held in printed form at any one time.

individual isolating switch and an individual functional switch shall be provided for each room heater or for each group of room heaters.

Where a number of permanently connected room heaters are installed in one room and are supplied by the one final subcircuit, a single isolating switch may be used for the room heaters in that room.

4.9.2 Isolating switches

In accordance with Clause 2.3.2.2, isolating switches shall be—

(a) installed immediately adjacent to an entrance to, or within, the room where the room heater is located; or

(b) installed on the switchboard at which the room heater final subcircuit originates.

Isolating switches may be incorporated in temperature-control devices, provided that they have a definite 'OFF' position.

4.9.3 Functional switches

In accordance with Clause 2.3.7, functional switches shall be installed in a readily accessible position in the same room, or immediately adjacent to an entrance to the room, in which the room heater or room heaters are located.

A functional switch may be—

(a) an appliance switch or switches with an 'OFF' position incorporated within the room heater; or

(b) an isolating switch provided in accordance with Clause 4.9.2(a).

4.10 ELECTRIC HEATING CABLES FOR FLOORS AND CEILINGS AND TRACE HEATING APPLICATIONS

4.10.1 General

Cables for electric heating systems in floors and ceilings and trace heating applications shall be of a type specifically designed for the purpose. The heating equipment shall be installed in accordance with the manufacturer's instructions.

4.10.2 Heating cables

Heating cables shall be so installed that they are not in contact with flammable materials and where designed to be embedded—

(a) are completely and adequately embedded in the substance they are intended to heat; and

(b) do not suffer any detrimental effect because of flexing or movement of the substance in which they are embedded.

auto login of Electrical Workers Licensing Group is licenced to temporarily download this document.
Electrical Workers Licensing Group may print this document but not more than 10% of the documents subscribed to may be held in printed form at any one time.

Copyright Standards New Zealand

Alternatively, where designed as trace heating cables, heating cables shall provide adequate heat transfer to the surface or material to which they are fixed.

* In New Zealand only, in-floor and ceiling heating cables shall be installed in accordance with NZS 6110. NZ

4.10.3 Isolating switches

Cables or groups of cables that comprise the heating system shall be provided with an isolating switch or switches in accordance with Clause 2.3.2.2.

Isolating switches may be incorporated in temperature-control devices, provided that they have a definite 'OFF' position.

Isolating switches shall be—

(a) installed immediately adjacent to an entrance to, or within, the room or area in which the heating system is located; or

(b) installed on the switchboard at which the heating system final subcircuit originates.

Exception: Where the heating system is provided for trace heating applications, the isolating switch need not be located as specified in this Clause.

4.10.4 Functional switches

Cables or groups of cables that comprise the heating system shall be provided with a functional switch or switches, in accordance with Clause 2.3.7.

Functional switches shall be installed in a readily accessible position immediately adjacent to an entrance to, or within, the room or area in which the heating system is located.

A functional switch may be an isolating switch in accordance with Clause 4.10.3(a).

Exception: Where the heating system is provided for trace heating applications, the functional switch need not be located as specified in this Clause.

4.10.5 Additional protection

All heating cables shall be provided with additional protection by an RCD with a fixed rated residual current not exceeding 30 mA, and—

(a) in the case of heating units fitted with a conductive covering, this covering shall be earthed;

(b) in the case of under-floor heating units without a conductive covering, an earthed metallic grid with a spacing not exceeding 30 mm shall be provided above the under-floor heating cable; and

Copyright Standards New Zealand

auto login of Electrical Workers Licensing Group is licenced to temporarily download this document.
Electrical Workers Licensing Group may print this document but not more than 10% of the documents subscribed to may be held in printed form at any one time.

(c) heating units shall be provided with adequate mechanical protection to prevent damage.

4.10.6 Signs

Where heating cables are installed, suitable signs drawing attention to their existence shall be provided in each location.

Where appropriate, signs warning of the danger of covering embedded heating equipment with furnishings or building materials that might cause excessive temperatures shall be provided.

This requirement may be satisfied by—

(a) clearly and permanently marking the functional switch or switches in the heated room or area; or

(b) providing suitable labelling at the relevant distribution board.

4.11 ELECTRIC DUCT HEATERS

The electrical portion of any electric duct heater installation shall comply with the requirements of this Standard.

NOTE: Attention is drawn to the fact that—

(a) such installations are within the scope of AS/NZS 1668.1;

(b) safety requirements are contained in AS/NZS 3102; and

(c) compliance therewith may be required by the relevant regulatory authorities.

4.12 ELECTRICITY CONVERTERS

4.12.1 General

For the purpose of this Clause, an electricity converter includes both static and dynamic equipment designed to stabilize the supply voltage, or to change the voltage or frequency of an electricity supply, or to maintain a continuous electricity supply for a limited period of time when the primary source of electricity supply is interrupted.

Examples include the following:

(a) Uninterruptible power systems (UPS).

(b) Semiconductor power converters (and inverters).

(c) Voltage stabilizers.

(d) Motor-generator sets.

(e) Rotary converters.

Transformers and engine-driven generating sets that comply with AS/NZS 3010 shall not be considered as electricity converters.

NOTE: Requirements for alternative, stand-by and stand-alone systems are set out in Clause 7.3.

COPYRIGHT

auto login of Electrical Workers Licensing Group is licenced to temporarily download this document.
Electrical Workers Licensing Group may print this document but not more than 10% of the documents subscribed to may be held in printed form at any one time.

Copyright Standards New Zealand

4.12.2 Selection and installation

NOTE: Guidance on the selection and installation of electricity converters is contained in—

A1 (a) for uninterruptible power systems (UPS)..... AS 62040 series;

(b) for semiconductor power converters..... AS 60146 series;

A1 (c) for batteries..... AS 3011 series and AS/NZS 5139; and

* (d) for rotating electrical machines..... AS 60034 series.

4.12.3 Control

Where an electrical installation, or part thereof, is supplied through an electricity converter, the converted supply shall be controlled by an isolating switch, or switches, at the output of the converter, or at the switchboard to which the output is connected.

Each electricity converter shall be controlled by switches or devices suitable for starting and stopping the converter. Where there is more than one switch or device for this purpose, they shall be grouped together and clearly identified.

An electricity converter shall be so arranged that it cannot supply energy upstream of the point of connection to the installation either directly or indirectly.

Exception: Electricity converters may be arranged to supply energy upstream of the point of connection to the installation subject to any additional conditions required by the electricity distributor.

Provision shall be made to ensure that all necessary connections for protection in the installation remain intact when supply is available from the output of the electricity converter.

4.12.4 Isolation

4.12.4.1 *General*

Each electricity converter shall be provided with an independent isolating switch in accordance with Clause 2.3.2.2.

The isolating switch shall—

(a) be installed adjacent to or on the electricity converter so that a person operating the switch has a clear view of any person working on the converter;

* (b) be provided with a means of securing the device in the isolated position that requires a deliberate action to engage or disengage it;

(c) comply with Clause 4.13 when the electricity converter incorporates an electric motor;

(d) be under manual control only; and

(e) not be capable of being overridden or bypassed by programmable control systems or the like.

COPYRIGHT

Electrical Workers Licensing Group may print this document but not more than 10% of the documents subscribed to may be held in printed form at any one time.
auto login of Electrical Workers Licensing Group is licenced to temporarily download this document.

Copyright Standards New Zealand

4.12.4.2 *Electricity converters incorporating batteries*

Where batteries are incorporated in an electricity converter, a switch capable of interrupting the supply from such batteries shall be installed adjacent to the batteries and shall be clearly identified to indicate its purpose.

A single switch that incorporates both a.c. and d.c. switching functions outlined in Clause 4.12.4.1 and this Clause may be used.

4.12.5 Overcurrent protection

4.12.5.1 *Electricity converter protection*

Electricity converters shall be provided with overcurrent protection.

Exception: Overcurrent protective devices shall not be provided where the unexpected interruption of the supply could cause a greater danger than overcurrent.

Overcurrent protective devices shall be located as close as practicable to the output terminals of the electricity converter so that the unprotected interconnecting conductors are as short as practicable and, in no case, exceed 15 m in length.

The unprotected interconnecting conductors shall be completely enclosed by metal or other material that is not flammable.

Exception: Overcurrent protection may be provided by—

(a) an overcurrent protective device within the electricity converter itself; or

(b) the characteristics of the electricity converter being unable to support the fault current.

Where an electricity converter is intended to operate in parallel with a network or other source, circulating harmonic currents shall be limited so that the current-carrying capacity of conductors is not exceeded.

NOTE: The effects of circulating harmonic currents may be limited as follows:

(a) The selection of generating sets with compensated windings.

(b) The provision of a suitable impedance in the connection to generator star points.

(c) The provision of switches that interrupt the circulatory circuit but that are interlocked so that at all times fault protection is not impaired.

(d) The provision of filtering equipment.

(e) Other suitable means.

4.12.5.2 *Circuit protection*

* **4.12.5.2.1** *General*

Every submain or final subcircuit outgoing from an electricity converter shall be individually protected in accordance with Clause 2.5 and shall also include additional protection, where required, by Clause 2.6.

COPYRIGHT

Copyright Standards New Zealand

auto login of Electrical Workers Licensing Group is licenced to temporarily download this document.
Electrical Workers Licensing Group may print this document but not more than 10% of the documents subscribed to may be held in printed form at any one time.

Exceptions:

1 *This requirement need not apply where protection on the incoming side (if any) provides protection against an overcurrent condition on the outgoing side.*

2 *Overcurrent protective devices shall not be provided where the unexpected interruption of the supply could cause a greater danger than overcurrent.*

* **4.12.5.2.2** *RCDs*

The possible waveform of a fault current to earth can affect the operation of RCDs and shall be taken into account for the selection of the type of RCD.

Where an electricity converter includes an inverter, the RCD shall be of a type suitable for the waveform of the particular inverter, and in accordance with the inverter manufacturer's recommendations.

NOTE: Requirements for types of RCDs are set out in Clause 2.6.2.2.

4.12.6 Earthing

The output of an electricity converter shall be provided with the same type of earthing system used for the associated electrical installation.

Protective earthing conductors shall not be switched.

Provision shall be made to ensure that all necessary connections for protection, such as the MEN connection, remain intact when supply is available from the output of the system.

NOTE: See Clause 4.12.2 for information regarding Standards applicable to various devices.

4.12.7 Neutral continuity

Electricity converters, particularly static converters, such as UPS, shall be arranged to ensure that the continuity of the neutral conductor to the load is not interrupted during bypass or maintenance switching.

4.12.8 Electrical equipment connected to output

All electrical equipment connected to the output side of an electricity converter shall be suitable for the voltage, current and frequency of the output of the unit.

NOTES:

1 The values of current-carrying capacity and voltage drop specified in the AS/NZS 3008.1 series are only valid for conductors operating at 50 Hz.

2 For the type of RCD to be used where additional protection is required for circuits or equipment supplied by an electricity converter, refer to Clause 2.6.2.2.

auto login of Electrical Workers Licensing Group is licenced to temporarily download this document.
Electrical Workers Licensing Group may print this document but not more than 10% of the documents subscribed to may be held in printed form at any one time.

Copyright Standards New Zealand

4.13 MOTORS

4.13.1 Protection against injury from mechanical movement

4.13.1.1 *Switching devices*

A1 **Every motor shall be provided with a switching device or devices capable of performing all of the following functions:**

(a) Starting and stopping the motor.

(b) Emergency stopping, in accordance with Clause 2.3.5.

(c) Isolating the motor for mechanical maintenance, in accordance with Clause 2.3.6.

Exceptions:

1 Where a number of motors are required to function as a group, or operate in a coordinated manner, e.g. a split system airconditioning unit, a single switching device may be used to control more than one motor.

2 A switch suitable for disconnection of supply in accordance with Item (c) need not be provided for motors that are—

- *connected by a plug and socket-outlet; or*
- *incorporated in an appliance having no exposed moving parts; or*
- *rated at not greater than 150 VA.*

NOTES:

1 Refer to Clause 2.3 for the location and function of the switching device.

2 AS/NZS 1668.1 requires provision for locking air-handling and smoke-spill motor-isolating switches in the ON position.

4.13.1.2 *Rating of switches*

The isolating switch shall have a rating of not less than—

(a) the full-load current of the motor when installed directly in the motor-supply circuit; or

(b) the control-circuit current when installed in the motor-starter circuit.

Any switch operating directly in the motor-supply circuit shall be capable of safely interrupting the locked-rotor or stall current of the motor. In the absence of any specific information supplied by the manufacturer, the locked-rotor or stall current shall be taken as—

(i) eight times the full-load current for a.c. motors; or

(ii) four times the full-load current for d.c. motors.

NOTE: Switches suitable for this application include the following:

(a) Switches complying with AS/NZS 3133 or AS/NZS 60669.1, marked with the letter ‘M’ and with the nominated locked-rotor current.

Copyright Standards New Zealand

auto login of Electrical Workers Licensing Group is licenced to temporarily download this document.
Electrical Workers Licensing Group may print this document but not more than 10% of the documents subscribed to may be held in printed form at any one time.

(b) Switches complying with AS/NZS 3947.3, marked with the utilization category ‘DC 23’ or ‘AC 23’ and with a rated operational current which is equal to or greater than the full-load current of the motor.

(c) Switches incorporated with and supplying a socket-outlet intended for use with a plug complying with AS/NZS 3112 or AS/NZS 60884.1.

Where one switch is used to isolate more than one motor, in accordance with Clause 4.13.1.1, the switch shall be capable of interrupting the sum of the following currents:

(A) The locked-rotor or stall current of the largest motor in the group.

(B) The full-load current of all other motors in the group.

4.13.1.3 *Devices for starting and stopping*

Starting-and-stopping devices shall be so located as to be easily operated by the person in charge of the motor.

A stopping device or isolating switch shall be provided where danger is likely to occur because of the presence of moving parts.

The stopping device shall remain effective in the event of a fault in a motor-control circuit.

Where electrical equipment is remotely controlled, devices shall be provided for stopping the motors at all points where danger is likely to occur.

NOTE: Arrangements for emergency stopping of motors should comply with Clause 2.3.5.

4.13.1.4 *Protection against restarting or reversal*

Where unexpected restarting of a motor might cause danger, each electric motor shall be provided with means to prevent automatic restarting after stopping.

NOTE: Such means need not be provided where a suitable method of avoiding danger by warning of automatic restarting is given. Alternatives include enclosure of moving parts, warning sirens, etc.

Where safety might be impaired by incorrect direction of rotation of a motor, suitable measures shall be taken to prevent danger from reversal of the direction of rotation.

NOTE: This applies particularly where reverse-current braking is used.

4.13.2 Protection against overload

Each electric motor having a rating exceeding 370 W shall be provided with control equipment incorporating means of protection against overload of the motor.

Exception: This Clause (Clause 4.13.2) does not apply to motors incorporated in an item of electrical equipment that complies with an appropriate Standard.

COPYRIGHT

Electrical Workers Licensing Group may print this document but not more than 10% of the documents subscribed to may be held in printed form at any one time.
auto login of Electrical Workers Licensing Group is licenced to temporarily download this document.

Copyright Standards New Zealand

4.13.3 Protection against overtemperature

4.13.3.1 *General*

Electric motors shall be provided with overtemperature protective devices complying with Clause 4.13.3.3 where they—

(a) may be required to run unattended (see Note) and have a rating greater than—

  (i) for shaded-pole type motors.....480 VA; or

  (ii) for other unattended motors .....240 VA.

(b) have a rating greater than 2250 W.

Exception: This Clause does not apply where overtemperature protection is not permitted or required in accordance with Clause 4.13.3.2.

NOTE: A continuously running motor or a motor under automatic control in non-domestic premises, where no person is normally in attendance in the vicinity of the motor, is deemed to be unattended. Consideration should be given to the presence of a caretaker, or other person who may be responsible for the inspection of motors, in which case it may be appropriate not to regard motors as unattended.

Examples of unattended motors are motors that—

(a) operate refrigerators in shops; or

(b) are in a remote portion of a building, such as a drainage sump in a basement; or

(c) operate a communal refrigerator in a block of flats.

4.13.3.2 *Protection prohibited*

Overtemperature protection shall not be provided in either of the following circumstances:

(a) In accordance with Clause 7.2.9, protection shall not be provided for motors associated with a fire-protection service.

(b) Protection shall not be provided where the opening of the motor circuit could create a hazard.

Overtemperature protection need not be provided for unattended submersible pump motors immersed in water that have a rating not greater than 2250 W.

4.13.3.3 *Overtemperature protective devices*

Overtemperature protective devices shall comply with the following:

(a) *Protection* Protection of motor windings against excessive temperatures shall be provided by—

  (i) thermal overload protective devices complying with AS/NZS 60947.4.1;

  (ii) built-in thermal protection, in accordance with AS/NZS 60947.8; or

COPYRIGHT

Copyright Standards New Zealand

auto login of Electrical Workers Licensing Group is licenced to temporarily download this document.
Electrical Workers Licensing Group may print this document but not more than 10% of the documents subscribed to may be held in printed form at any one time.

(iii) a device that affords an equivalent degree of protection.

(b) *Operation* The protective device shall disconnect, directly or indirectly, not less than the following number of supply conductors to the motor:

(i) For single-phase a.c. motors and d.c. motors supplied from a two-wire supply with one line earthed and single-phase a.c. motors: one.

(ii) For three-phase a.c. motors and d.c. motors supplied from two unearthed lines: two.

(c) *Additional requirements for unattended motors* Where thermal protective devices for unattended motors are of the automatic reset type, the device shall protect the motor windings against attaining excessive temperatures under continued tripping conditions.

4.14 TRANSFORMERS

4.14.1 General

Transformers shall be installed in accordance with Clauses 4.14.2 to 4.14.5.

Exception: The following transformers need not comply with this Clause:

1 An instrument transformer.

2 An extra-low voltage transformer.

3 A luminous discharge tube transformer.

4 A transformer incorporated in a motor starter or other similar electrical equipment.

4.14.2 Secondary circuit

4.14.2.1 *General*

The wiring and electrical equipment connected to the secondary winding of a transformer shall comply with the requirements of this Standard for extra-low, low or high voltage, as appropriate to the nominal secondary voltage.

4.14.2.2 *Control and protection*

The conductors connected to the secondary windings of a transformer shall be—

(a) considered as submain or final subcircuit conductors, as appropriate; and

(b) controlled and protected in accordance with the appropriate requirements of Clauses 2.3 and 2.5.

Exception: This requirement need not apply where—

(a) the transformer secondary winding supplies only one submain or final subcircuit; and

COPYRIGHT

Copyright Standards New Zealand

auto login of Electrical Workers Licensing Group is licenced to temporarily download this document.
Electrical Workers Licensing Group may print this document but not more than 10% of the documents subscribed to may be held in printed form at any one time.

(b) the secondary circuit conductors have a current-carrying capacity not less than the rated load current of the transformer primary winding multiplied by the ratio of the transformer primary voltage to the secondary voltage.

4.14.3 Low voltage transformer supply

4.14.3.1 *Isolating transformers*

Electrical equipment may be supplied through an isolating transformer, in accordance with Clause 7.4.

4.14.3.2 *Other transformers*

Electrical equipment shall be earthed as required by Clause 5.4.

Exception: Where the low voltage transformer output complies with the requirements of the AS/NZS 61558 series, earthing is not required on the secondary side.

4.14.4 Autotransformers

An autotransformer shall not be used to supply electrical equipment, including circuit wiring, having a voltage rating of less than the highest input or output voltage of the autotransformer.

4.14.5 Step-up transformers

Where a transformer is used to raise the voltage above that at which electricity is supplied at the point of supply, no connection shall be made between the primary and secondary windings.

Exception: A connection may be made between primary and secondary windings, using a protective earthing conductor, to provide an earth-reference supply.

4.15 CAPACITORS

4.15.1 General

Capacitors shall be installed in accordance with Clauses 4.15.2 and 4.15.3.

Exception: The requirements of this Standard do not apply to capacitors that are fitted as an integral part of other electrical equipment, such as luminaires.

4.15.2 Electrical equipment

4.15.2.1 *General*

Electrical equipment and wiring for connection to capacitors shall be suitable for the highest voltages, currents and temperatures that are likely to occur.

Adequate means shall be provided to ensure the dissipation of heat from the electrical equipment.

auto login of Electrical Workers Licensing Group is licenced to temporarily download this document.
Electrical Workers Licensing Group may print this document but not more than 10% of the documents subscribed to may be held in printed form at any one time.

Copyright Standards New Zealand

auto login of Electrical Workers Licensing Group is licenced to temporarily download this document.
Electrical Workers Licensing Group may print this document but not more than 10% of the documents subscribed to may be held in printed form at any one time.

4.15.2.2 *Rating of circuit-breakers, switches or contactors*

Any circuit-breaker, switch or contactor controlling a capacitor shall be suitable for the purpose of switching capacitors and shall be of appropriate rating for the reactive component.

An example of an appropriate contactor would be a utilization category AC-6b device to AS/NZS 60947.4.1.

4.15.2.3 *Current-carrying capacity of supply conductors*

Where a capacitor is controlled by a circuit-breaker as required by Clause 4.15.3.3(a), the conductors connected to the capacitor shall have a current-carrying capacity not less than the greater of—

(a) 135% of the rated current of the capacitor; or

(b) the setting of the circuit-breaker.

Where a capacitor is permanently connected to a motor circuit, the conductors shall have a current rating of not less than the greater of—

(i) one-third of the rating of the motor-circuit conductors; or

(ii) 135% of the rated current of the capacitor.

4.15.3 Provision for discharge and control

4.15.3.1 *General*

Capacitors with values greater than 0.5 μF shall be provided with a discharge path.

These capacitors shall be controlled in accordance with one of the methods set out in Clauses 4.15.3.2 and 4.15.3.3, as appropriate.

The voltage between capacitor terminals shall be not more than 50 V after the capacitor has been disconnected from the supply for the following period, as applicable:

(a) Where the capacitor is rated up to and including 650 V .....1 min.

(b) Where the capacitor is rated above 650 V.....5 min.

Capacitors and electrical equipment containing capacitors shall be provided with a warning notice containing information similar to the following:

WARNING: ENSURE THAT CAPACITORS ARE COMPLETELY DISCHARGED BEFORE WORKING ON EQUIPMENT.

4.15.3.2 *Capacitors connected in parallel with individual appliances*

A capacitor connected in parallel with an individual appliance shall comply with the following requirements:

(a) The capacitor shall be connected so that the windings of the appliance form a permanent discharge path for the capacitor.

(b) No switch or fuse shall be inserted between the capacitor and the appliance.

COPYRIGHT

Exception: The requirements of Items (a) and (b) need not apply where the capacitor incorporates a permanently connected discharge device.

(c) The capacitor shall be deemed to be controlled by the controlgear of the appliance.

4.15.3.3 *Capacitors not connected in parallel with individual appliances*

A capacitor not connected in parallel with an individual appliance shall comply with the following requirements:

(a) The capacitor shall be controlled by a circuit-breaker fitted with an overcurrent release.

Provision shall be made for the discharge of the capacitor by the use of—

(i) auxiliary contacts of the circuit-breaker that automatically connect a discharge device to the capacitor immediately when it is disconnected from the supply; or

(ii) a permanently connected discharge device in parallel with the capacitor.

Exception: Where either—

(a) the capacitor is rated at not more than 100 kVAr (reactive power); or

(b) each capacitor in a bank of shunt-connected capacitors is rated at not more than 100 kVAr (reactive power),

the capacitor may be controlled by a quick make-and-break switch or contactor and protected by fuses, provided that the following requirements are met:

(A) Such switching shall incorporate a means of manual operation to provide for the individual isolation of each capacitor, or for the capacitor bank as a whole.

(B) Provision shall be made for the discharge of the capacitor by the use of a permanently connected discharge device in parallel with the capacitor.

(b) No fuse or switch shall be connected between—

(i) the auxiliary contacts of the circuit-breaker and the discharge device referred to in Item (a)(i); or

(ii) the permanently connected discharge device and a capacitor referred to in Item (a)(ii).

auto login of Electrical Workers Licensing Group is licenced to temporarily download this document.
Electrical Workers Licensing Group may print this document but not more than 10% of the documents subscribed to may be held in printed form at any one time.

Copyright Standards New Zealand

4.16 ELECTRICAL EQUIPMENT CONTAINING LIQUID DIELECTRICS

4.16.1 General

Wherever electrical equipment, such as oil-filled transformers or capacitors, contains flammable liquid in significant quantity, precautions shall be taken to prevent burning liquid and the products of combustion of the liquid (flame, smoke, toxic gases) spreading to other parts of the premises.

4.16.2 Liquid dielectrics having a flashpoint not exceeding 250°C

Where electrical equipment is filled with a liquid dielectric having a flashpoint not exceeding 250°C and has a total liquid capacity exceeding 50 L in any unit or group of adjacent units, precautions shall be taken to prevent the spread of fire.

Such precautions may include the provision of enclosures consisting of fire-resisting dykes, bunds, curbed areas, basins, trenches filled with coarse crushed stone or, where necessary, trapped drains.

NOTES:

1 *Examples of such precautions are—*

(a) a drainage pit to collect leakages of liquid and ensure their extinction in the event of fire; or

(b) installation of the electrical equipment in a chamber of adequate fire-resistance and the provision of sills or other means of preventing burning liquid spreading to other parts of the premises, such chamber being ventilated solely to the external atmosphere.

2 For less than 50 L, it is generally sufficient to take precautions to prevent the escape of liquid.

3 It may be desirable to switch off the supply to the electrical equipment automatically at the onset of a fire.

4.17 BATTERIES

A1 Information on the selection and installation of batteries is contained in AS 3011.1, AS 3011.2 and AS/NZS 5139.

4.18 GAS APPLIANCES AND EQUIPMENT

4.18.1 Gas appliances

4.18.1.1 *General*

A gas appliance connected to the electricity supply shall be provided with a means of electrical isolation that is adjacent to the appliance location and is accessible with the appliance in the installed position.

For cooking appliances, the means of isolation shall not be mounted in the prohibited location specified in Clause 4.7.3 and Figure 4.17 for clearance from open cooking surfaces.

If the appliance has an open cooking surface incorporating both gas and electric cooking, it shall also comply with Clause 4.7.

COPYRIGHT

auto login of Electrical Workers Licensing Group is licenced to temporarily download this document.
Electrical Workers Licensing Group may print this document but not more than 10% of the documents subscribed to may be held in printed form at any one time.

Copyright Standards New Zealand

4.18.1.2 *In Australia only* **A**

* One of the following means of isolation shall be provided for the gas appliance:

(a) A plug to an accessible switched socket-outlet.

or

(b) A plug to a socket-outlet that may be located in an inaccessible position but has a separate switch operating in all live (active and neutral) conductors that is located in an accessible position.

or

(c) An accessible isolating switch (lockable) operating in all live (active and neutral) conductors.

4.18.1.3 *In New Zealand only* **NZ**

One of the following means of isolation shall be provided for the gas appliance:

(a) A plug to an accessible switched socket-outlet.

or

(b) A plug to a socket-outlet that may be located in an inaccessible position but has a separate switch operating in all active conductors that is located in an accessible position.

or

(c) An isolating switch (lockable) operating in all active conductors.

4.18.2 Gas cylinders containing heavier-than-air gases—Outdoors

4.18.2.1 *Sources of ignition*

Electrical equipment that is a source of ignition, such as socket-outlets, switches, luminaires, switchboards, meter boxes and airconditioners, shall not be installed within the hazardous areas shown in Figure 4.18 by dimensions A and B. Dimensions A and B are shown in Figure 4.18 for both exchange and in-situ fill gas cylinders.

Exception: Approved combined gas and electrical meter enclosures are exempted from these requirements.

NOTES:

1 Electrical equipment selected and installed in accordance with Clause 7.7.2.4 is not considered an ignition source.

2 Refer to Clause 7.7 for requirements in hazardous areas.

* **4.18.2.2** *Hot particles and surfaces*

Refer to Clause 7.7 and AS/NZS 60079.14 for exclusion zones in hazardous areas.

auto login of Electrical Workers Licensing Group is licenced to temporarily download this document.
Electrical Workers Licensing Group may print this document but not more than 10% of the documents subscribed to may be held in printed form at any one time.

Copyright Standards New Zealand

* **4.18.2.3** *Electrical equipment and gas supply—NZ only* NZ

In New Zealand domestic installations only, only electrical equipment that is directly associated with the gas supply may be installed in the hazardous area shown in Figure 4.18.

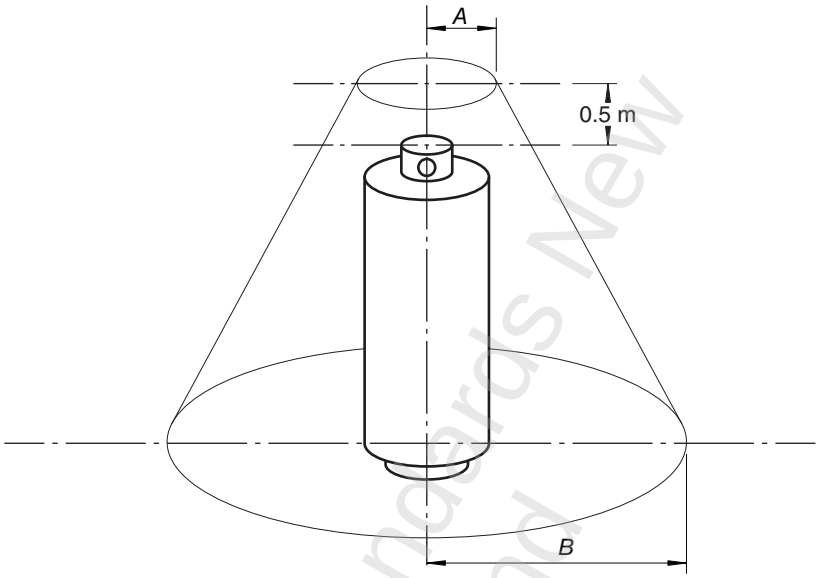

	Exchange cylinder mm	In-situ fill cylinder mm
A	500	1500
B	1500	3500

FIGURE 4.18 HAZARDOUS AREA PRESENTED BY A GAS CYLINDER OUTDOORS FOR HEAVIER-THAN-AIR GASES

* **4.18.3 Gas cylinders—Indoors—New Zealand only** NZ

A compartment located indoors provided for a gas cylinder shall not contain electrical equipment or connections in wiring that is a source of ignition, such as socket-outlets, switches, dishwashers or waste disposal units.

NOTE: For further information refer to AS/NZS 5601.1.

* **4.18.4 Gas relief vent terminal—Natural gas, LP Gas or Biogas**

Electrical equipment that is a source of ignition, such as socket-outlets, switches, luminaires, switchboards, meter boxes and airconditioners, shall not be installed within the hazardous areas shown in Figure 4.19 for gas relief vent terminals.

NOTE: Equipment, according to AS/NZS 60079.14 for Zone 2, is not considered a source of ignition. (See Clause 7.7.)

Copyright Standards New Zealand

auto login of Electrical Workers Licensing Group is licenced to temporarily download this document.
Electrical Workers Licensing Group may print this document but not more than 10% of the documents subscribed to may be held in printed form at any one time.

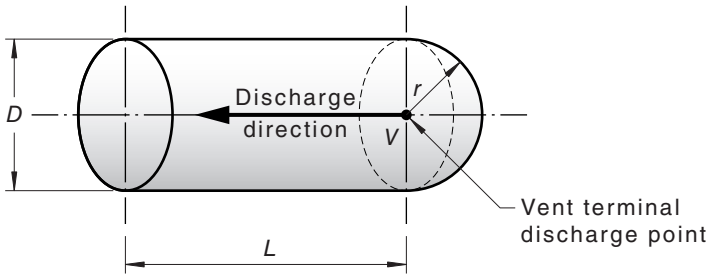

(a) Vent terminal exclusion zone with no object in the discharge direction

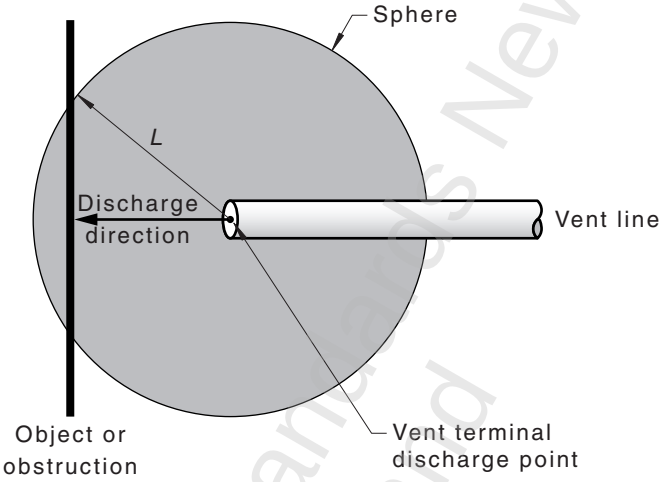

(b) Vent terminal exclusion zone with an object in the discharge direction

Vent terminal diameter, *V* (not shown)	Exclusion zone, m		
	L	***D***	***r***
Not exceeding 50 mm	1.5	1	0.5
Exceeding 50 mm	1.5*T*	*T*	0.5*T*

NOTES:

1 *T* = [vent terminal diameter (mm), *V*]/(50), in metres.

2 The exclusion zone shown in Figure 4.19(a) depicts a space consisting of a cylinder in the discharge direction and a hemisphere in the opposite direction of discharge for the vent terminal discharge point.

3 The exclusion zone only applies up to 200 kPa.

FIGURE 4.19 EXCLUSION ZONES PRESENTED BY A GAS RELIEF VENTING TERMINAL

A2

4.18.5 Reticulated lighter-than-air gas system, metering system and regulators—New Zealand only

NZ

In domestic installations, only electrical equipment that is directly associated with the gas supply may be installed in the hazardous area shown in Figure 4.20.

COPYRIGHT

Copyright Standards New Zealand

Electrical Workers Licensing Group may print this document but not more than 10% of the documents subscribed to may be held in printed form at any one time.
auto login of Electrical Workers Licensing Group is licenced to temporarily download this document.

Exclusion Zone
This indicates the size of the exclusion zone.
It starts at ground level and is centred on the service riser.

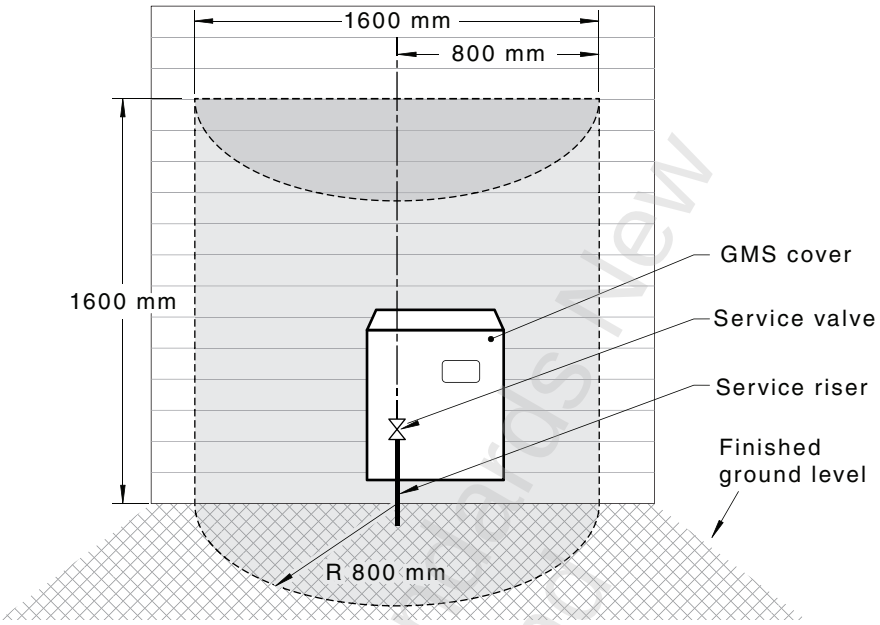

FIGURE 4.20 HAZARDOUS AREA FOR RETICULATED GAS SUPPLY REGULATORS NZ

4.19 AIRCONDITIONING AND HEAT PUMP SYSTEMS

Airconditioning and heat pump systems incorporating a compressor shall be provided with an isolating switch (lockable) in accordance with Clause 2.3.2.2, installed adjacent to but not on the unit, which isolates all parts of the system, including ancillary equipment, such as head units, from the same location.

For split system airconditioning units, where the manufacturer requires the airconditioning system to be connected to the electricity supply by means of a plug and socket at the internal unit, the isolating switch installed at the external unit shall control the socket-outlet located at the internal unit.

* For airconditioning systems (including room heaters incorporating a compressor) where the internal unit (or units) are supplied from a circuit separate to that of the compressor, a warning sign shall be permanently fixed on or adjacent to the compressor isolator indicating that the isolator does not isolate the ancillary equipment. Where the internal unit (or units) are not connected by plug and socket, an independent isolating switch (lockable) in accordance with Clause 2.3.2.2 shall also be installed adjacent to each separately supplied internal unit (or units).

COPYRIGHT

Electrical Workers Licensing Group may print this document but not more than 10% of the documents subscribed to may be held in printed form at any one time.
auto login of Electrical Workers Licensing Group is licenced to temporarily download this document.

Exceptions:

1 The isolating switch may be installed at the switchboard supplying the system if the switchboard is dedicated to the equipment (e.g. an airconditioning plant room).

* *2 This Clause need not apply to unitary window or through-wall airconditioners, nor to heat pump hot water services that are supplied by a plug and socket-outlet installed adjacent to the unit.*

* 4.20 LIFTS

4.20.1 General

The electrical installation of lifts shall be in accordance with the appropriate requirements of this Standard.

Lifts covered by this Standard include the following:

(a) Electric lifts.

(b) Electrohydraulic lifts.

(c) Goods lifts.

(d) Motor-room-less lifts (MRLs).

(e) Passenger lifts.

Lifts shall be installed in accordance The National Construction Code of Australia or the New Zealand Building Code.

Lifts that are installed as emergency lifts, shall comply with the additional requirements for safety services in Clause 7.2.

NOTE: Regulatory authorities may have additional requirements.

4.20.2 Lift supply arrangement

Lifts shall be supplied by a dedicated circuit.

4.20.3 Labelling

Lift circuits shall be clearly identified by contrasting colouring or other suitable means, in accordance with Clause 2.3.3.4.

WARNING: LIFT CIRCUIT—DO NOT SWITCH OFF.

4.20.4 Motor-room-less lifts (MRLs)

4.20.4.1 *General*

Lifts classified as motor-room-less lifts (MRLs) are lifts that due to their design have no need for a traditional lift motor room.

MRLs that are installed as emergency lifts, shall comply with the additional requirements for safety services in Clause 7.2.

NOTE: Regulatory authorities may have additional requirements.

COPYRIGHT

Copyright Standards New Zealand

auto login of Electrical Workers Licensing Group is licenced to temporarily download this document.
Electrical Workers Licensing Group may print this document but not more than 10% of the documents subscribed to may be held in printed form at any one time.

4.20.4.2 *MRL switchboards*

An MRL switchboard shall not be located in the lift shaft.

A switchboard located remote from the main switchboard and dedicated to supplying individual MRL switchboards shall be readily accessible.

4.20.4.3 *Switchgear*

The protective and control device(s) of an MRL shall be located in a readily accessible position.

Copyright Standards New Zealand

auto login of Electrical Workers Licensing Group is licenced to temporarily download this document.
Electrical Workers Licensing Group may print this document but not more than 10% of the documents subscribed to may be held in printed form at any one time.

SECTION 5 EARTHING ARRANGEMENTS AND EARTHING CONDUCTORS

5.1 GENERAL

5.1.1 Application

This Section specifies the minimum requirements for the selection and installation of earthing arrangements that shall be achieved to satisfy Part 1 of this Standard.

5.1.2 Selection and installation

Earthing arrangements shall be selected and installed to perform the following functions, or have the following features:

(a) Enable automatic disconnection of supply in the event of a short-circuit to earth fault or excessive earth leakage current in the protected part of the installation through protective earthing arrangements.

(b) Enable equipment requiring an earth reference to function correctly through functional earth (FE) arrangements.

(c) Mitigate voltage differences appearing between exposed conductive parts of equipment and extraneous conductive parts through equipotential bonding arrangements.

(d) Provide an effective and reliable low impedance fault path capable of carrying earth fault and earth leakage currents without danger or failure from thermal, electromechanical, mechanical, environmental and other external influences.

(e) Provide measures for the connection of exposed conductive parts and extraneous conductive parts.

5.1.3 MEN earthing system

The protective earthing arrangements required in this Standard apply to electrical installations connected to the multiple earthed neutral (MEN) distribution system that forms the standard distribution system used in Australia and New Zealand.

Under the MEN system, the neutral conductor (PEN) of the distribution system is earthed at the source of supply at regular intervals throughout the system and at each electrical installation connected to the system. Within the electrical installation, the earthing system is separated from the neutral conductor and is arranged for the connection of the exposed conductive parts of equipment.

auto login of Electrical Workers Licensing Group is licenced to temporarily download this document.
Electrical Workers Licensing Group may print this document but not more than 10% of the documents subscribed to may be held in printed form at any one time.

Copyright Standards New Zealand

NOTES:

1 The MEN system as installed in Australia and New Zealand differs from the IEC system. Both systems are identical in principle but vary in detail. For further details refer to AS/NZS 61439 and AS/NZS 3007.

2 The MEN system and its various parts are illustrated in Figures 5.1 and 5.2. Figure 5.1 shows a general arrangement and Figure 5.2 an alternative arrangement in an owner or user operated supply substation installation. IEC 60364 series describes the MEN system as a TN-C-S system with the letters signifying—

T the distribution system is directly connected to earth—at the neutral point of the supply transformer;

N the exposed conductive parts are connected to the earthed point of the distribution system—at the MEN connection;

C the neutral and protective conductor functions are combined in a single conductor (the neutral conductor of the distribution system);

S the protective conductor function is separated from the neutral—separate conductors within the installation.

auto login of Electrical Workers Licensing Group is licenced to temporarily download this document.
Electrical Workers Licensing Group may print this document but not more than 10% of the documents subscribed to may be held in printed form at any one time.

Copyright Standards New Zealand

auto login of Electrical Workers Licensing Group is licenced to temporarily download this document.
Electrical Workers Licensing Group may print this document but not more than 10% of the documents subscribed to may be held in printed form at any one time.

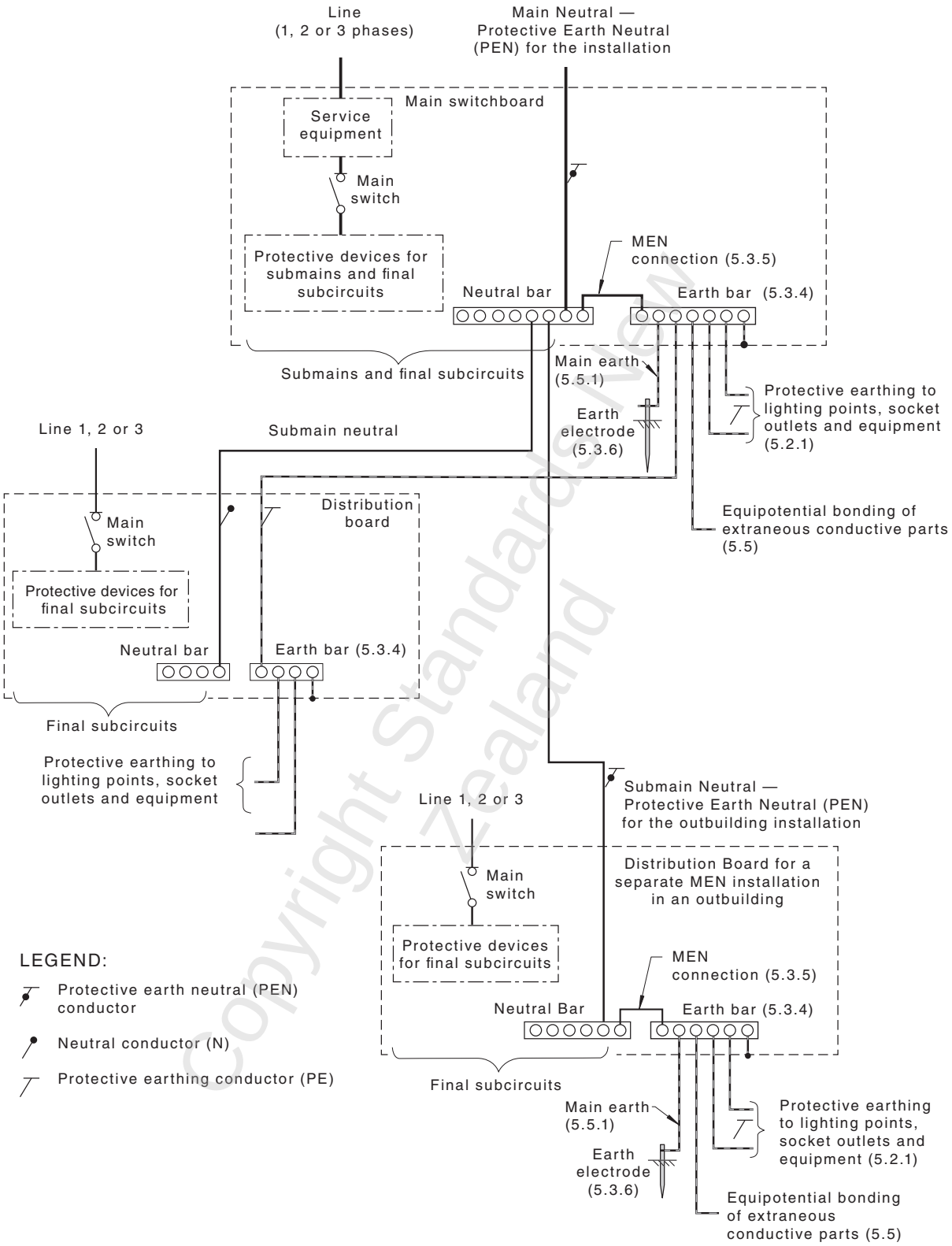

NOTES:

1 Refer to Clause 5.3.5.1.

2 Symbols are explained in Appendix J.

FIGURE 5.1 MULTIPLE EARTHED NEUTRAL (MEN) SYSTEM OF EARTHING—GENERAL ARRANGEMENT PEN DISTRIBUTION TN-C-S

A1

COPYRIGHT

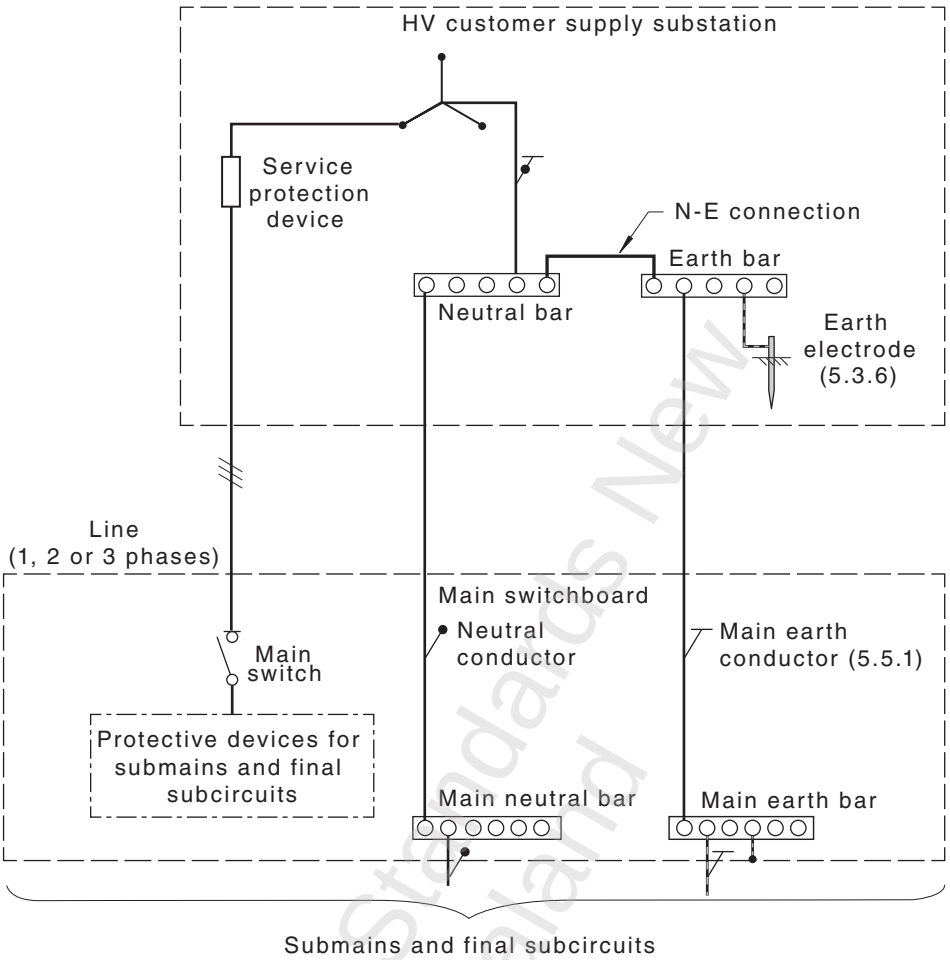

LEGEND:

Protective earth neutral (PEN) conductor

Neutral conductor (N)

Protective earthing conductor (PE)

NOTE: Symbols are explained in Appendix J.

FIGURE 5.2 ALTERNATIVE EARTHING ARRANGEMENT IN AN OWNER OR USER OPERATED SUPPLY SUBSTATION INSTALLATION

5.1.4 Other earthing systems

Alternatives to the MEN system may be permitted, provided that the requirements of Part 1 of this Standard are satisfied, taking into account any effects on the distribution system supplying the installation.

Examples:

1 *Electrical installations and supply systems, in accordance with the descriptions and compliance conditions permitted by IEC 60364 series.*

COPYRIGHT

Copyright Standards New Zealand

auto login of Electrical Workers Licensing Group is licenced to temporarily download this document.
Electrical Workers Licensing Group may print this document but not more than 10% of the documents subscribed to may be held in printed form at any one time.

2 Electrical installations in surface mines complying with AS/NZS 3007 which permits the use of TN, TT and IT systems.

3 Existing installations may still remain connected under former direct earthing or voltage operated earth leakage circuit breaker (ELCB) systems permitted by superseded editions of this Standard.

4 Earthing/bonding arrangements for installations that are not supplied from a distribution system.

* *5 Electrical installations complying with IEC 60364 series which permits the use of TN, TT and IT systems as alternatives to the MEN system.*

5.2 EARTHING FUNCTIONS

5.2.1 Protective earthing

When a fault occurs between a live part and an exposed conductive part or parts of the protective earthing system, a prospective touch voltage may arise between simultaneously accessible conductive parts. Fault protection by means of automatic disconnection of supply is intended to limit this voltage.

Automatic disconnection is achieved by—

(a) the provision of a protective earthing system in which exposed conductive parts are connected via conductors or similar medium to the earthed neutral of the distribution system; and

(b) in the event of a fault current or excessive earth leakage current flowing in the protective earthing system, overcurrent or earth leakage current protective devices operate to disconnect the affected part of the installation within the specified maximum duration of the prospective touch voltage.

5.2.2 Functional earthing (FE)

Equipment may be required to be connected to the earthing system for purposes of correct operation rather than the safety conditions associated with protective earthing. In such cases, functional earthing conductors are not required to be selected and installed to withstand fault currents or to be identified in the same manner as a protective earthing conductor.

Examples:

1 Functional earth (FE) connections fitted to certain types of RCDs to provide an earth for an alternative supply connection for the internal electronic circuit operation in the event of the incoming neutral connection becoming disconnected.

2 Conductors connecting cathodic protection systems or radio interference suppression devices to a separate earthing arrangement.

Electrical Workers Licensing Group is licenced to temporarily download this document.
auto login of Electrical Workers Licensing Group may print this document but not more than 10% of the documents subscribed to may be held in printed form at any one time.

Copyright Standards New Zealand

3 Where a 'clean earth' is specified for data or signalling purposes in a particular item of electrical equipment, the manufacturer of the electrical equipment should be consulted in order to confirm the necessary arrangements.

Where required, for operational purposes, functional earth connections for data and signalling purposes should be insulated from all protective earthing connections and conductors and should only be connected together at one point, normally at the connection to the main earthing terminal/connection or bar.

Care needs to be exercised to avoid unintentional contact between the two earthing systems.

A conductor insulation colour for functional earth conductors has not been specified in this Standard. However, to ensure that functional earthing connections are made to the correct earthing system, a green or green/yellow conductor identification shall not be used.

In Australia, for telecommunication system earthing, see AS/CA S009 for the requirements for the colour and installation of a Telecommunications Reference Conductor. **A**

NOTE: Additional information on functional earthing is available in IEC 60364-4-44.

5.2.3 Earthing for combined protective and functional purposes

Where earthing for combined protective and functional purposes is required, the requirements for protective purposes shall prevail.

5.3 EARTHING SYSTEM PARTS

5.3.1 General

The protective earthing arrangement for an electrical installation providing protection by means of automatic disconnection of supply and connected to the MEN system of distribution shall include the following parts:

(a) Protective earthing conductors connecting exposed conductive parts as required.

(b) Main earthing conductor.

(c) Main earthing terminal, connection or bar.

(d) MEN connection between the main earthing terminal, connection or bar and the supply neutral bar.

(e) Earth electrode.

(f) Equipotential bonding of extraneous conductive and other parts as required.

NOTE: Examples of the parts of the MEN system of earthing are shown in Figures 5.1 and 5.2.

The parts of the earthing system shall comply with Clauses 5.3.2 to 5.3.7.

COPYRIGHT

Copyright Standards New Zealand

auto login of Electrical Workers Licensing Group is licenced to temporarily download this document.
Electrical Workers Licensing Group may print this document but not more than 10% of the documents subscribed to may be held in printed form at any one time.

5.3.2 Earthing conductor material and type

5.3.2.1 *Conductor material*

5.3.2.1.1 *Copper conductors*

Copper earthing conductors shall be of high conductivity copper and shall be in the form of—

(a) stranded conductors;

(b) circular braided conductors; or

(c) solid conductors having a cross-sectional area not less than 10 mm^2 and a thickness not less than 1.5 mm.

Exceptions:

1 A smaller solid conductor may be used where permitted by a particular cable Standard.

2 This Clause need not apply where copper cable components, such as sheaths or screens, are deemed to be an earthing conductor in accordance with Clause 5.3.2.2.

5.3.2.1.2 *Aluminium conductors*

Aluminium conductors may be used as earthing conductors, provided that they comply with the following conditions:

(a) Conductors of 10 mm^2 or less shall be solid conductors.

(b) Minimum 16 mm^2 conductors shall be used for main earthing conductors.

(c) Connection methods shall comply with Section 3 of this Standard.

(d) Installation methods shall prevent corrosion of the conductor and connections.

(e) Conductors shall not be installed underground or in damp situations.

Exception: Aluminium earthing conductors may be installed underground or in damp situations where designed and suitable for such use.

5.3.2.1.3 *Other materials*

Materials other than copper or aluminium may be used as an earthing conductor. In such cases, the conductor resistance shall be not greater than that for a copper earthing conductor determined in accordance with Clause 5.3.3, and the degree of corrosion resistance shall not be inferior to other materials suitable for the purpose.

5.3.2.2 *Conductor type*

Protective earthing conductors may include the following:

(a) Earthing conductors that comply with Clause 5.3.2.1, separately installed.

COPYRIGHT

Copyright Standards New Zealand

auto login of Electrical Workers Licensing Group is licenced to temporarily download this document.
Electrical Workers Licensing Group may print this document but not more than 10% of the documents subscribed to may be held in printed form at any one time.

(b) Earthing conductors that comply with Clause 5.3.2.1, in a common enclosure with live conductors.

(c) Earthing conductors in multi-core cables.

(d) Busbars.

In addition, and subject to the special conditions of Clause 5.3.2.3, the following media may be regarded as a protective earthing conductor:

(i) Conductive conduit, tube, pipe, trunking and similar wiring enclosures.

(ii) Conductive sheaths, armours and screens of cables.

(iii) Conductive framework used for mounting electrical equipment.

(iv) Catenary wires for the support of cables.

Sprinkler pipes or pipes conveying gas, water, flammable liquid or other conductive non-electrical service enclosures shall not be used as an earthing medium.

NOTE: This requirement does not preclude the bonding of such conductive non-electrical service enclosures to conductive electrical service enclosures in accordance with Clause 5.6.

Main earthing conductors shall be of a type that complies with Clause 5.3.2.1.

5.3.2.3 *Special conditions*

The following conditions apply where the components in Clause 5.3.2.2(i), (ii), (iii) or (iv) are used for protective earthing:

(a) *Conductive conduit, tube, pipe, trunking and similar wiring enclosures* May be regarded as a protective earthing conductor, provided that—

(i) the electrical equipment to be earthed is supplied by live conductors contained within the wiring enclosure; and

(ii) for screwed conductive wiring enclosures, the wiring enclosure is directly connected by conductive threads or locknuts to the electrical equipment to be earthed.

(b) *Conductive sheaths, armours and screens of cables* May be regarded as a protective earthing conductor, provided that the electrical equipment to be earthed is supplied only by live conductors incorporated in the cable.

Exception: This condition does not preclude the use of a MIMS cable sheath as a main earthing conductor, provided that any circuit-protective earthing conductors connected to the sheath are associated only with the circuits supplied through the MIMS cable.

Electrical Workers Licensing Group is licenced to temporarily download this document.
auto login of Electrical Workers Licensing Group may print this document but not more than 10% of the documents subscribed to may be held in printed form at any one time.

Copyright Standards New Zealand

(c) *Conductive framework*:

(i) *General* Conductive framework may be regarded as a protective earthing conductor, provided that—

(A) the exposed conductive parts of electrical equipment are mounted on, and in effective electrical contact with, the framework; and

(B) the conductive framework is earthed by the connection of a protective earthing conductor directly to the framework.

(ii) *Contact with hinged components* Hinged components of conductive framework, such as cubicle doors, may be regarded as a protective earthing conductor, provided that—

(A) the fixed component of the framework is connected to a protective earthing conductor; and

(B) the fixed and hinged components of the framework are connected by means of a flexible protective earthing conductor.

(iii) *Contact with moving components* The interface between moving components may be regarded as a protective earthing conductor, provided that—

(A) the fixed component of the equipment is directly connected to a protective earthing conductor; and

(B) the fixed and movable components of the equipment are in effective contact by means of metal-to-metal bearing surfaces, such as the contact between a rail and wheel or between an axle and bearing.

Additional means of electrical continuity, such as sliding shoes or spring-loaded brushes, may be required where an accumulation of rust or non-conductive dust is likely to occur.

(d) *Catenary wires* A catenary wire may be regarded as a protective earthing conductor, provided that it—

(i) has not less than seven strands;

(ii) is supported by means of suitable anchorages;

(iii) has a nominal cross-sectional area of not less than 8.5 mm^2 if constructed of hard-drawn copper or galvanized low carbon (mild) steel;

(iv) has a resistance in accordance with the requirements of Clause 5.3.3; and

(v) is identified as an earthing conductor, in accordance with Clause 3.8.3.4, and for aerial earthing conductors, at each anchorage point or catenary support.

COPYRIGHT

auto login of Electrical Workers Licensing Group is licenced to temporarily download this document.
Electrical Workers Licensing Group may print this document but not more than 10% of the documents subscribed to may be held in printed form at any one time.

Copyright Standards New Zealand

5.3.2.4 *Insulation*

Earthing conductors shall be provided with insulation.

Exceptions: The following forms of earthing conductors need not be provided with insulation:

1 Aerial conductors.

2 Flat braided conductors.

3 Busbars.

4 Sheaths of MIMS cable.

5 Conductive framework and wiring enclosures deemed to be an earthing conductor, in accordance with Clause 5.3.2.2.

6 Copper earthing conductors buried direct in the ground in accordance with Clause 5.5.5.5.

7 Catenary wires.

5.3.2.5 *Identification*

Insulated earthing conductors shall be identified in accordance with Clause 3.8.

5.3.3 Earthing conductor size (cross-sectional area)

5.3.3.1 *Protective earthing conductors*

5.3.3.1.1 *General*

The cross-sectional area of a protective earthing conductor shall ensure—

(a) adequate current-carrying capacity for prospective fault currents for a time at least equal to the operating time of the associated overcurrent protective device;

(b) appropriate earth fault-loop impedance (see Clause 5.7);

(c) adequate mechanical strength and resistance to external influences; and

(d) for parts of the protective earthing conductor that do not consist of cables, or parts of cables, that there is an allowance for the subsequent deterioration in conductivity that may reasonably be expected.

5.3.3.1.2 *Selection*

The cross-sectional area of any copper protective earthing conductor required for the protection of any portion of an electrical installation shall be determined either—

(a) from Table 5.1 in relation to the cross-sectional area of the largest active conductor supplying the portion of the electrical installation to be protected; or

COPYRIGHT

Copyright Standards New Zealand

auto login of Electrical Workers Licensing Group is licenced to temporarily download this document.
Electrical Workers Licensing Group may print this document but not more than 10% of the documents subscribed to may be held in printed form at any one time.

(b) by calculation, in accordance with Clause 5.3.3.1.3.

Exceptions:

1 The minimum size of a conductor required for the earthing of exposed conductive parts associated with unprotected consumer mains shall be in accordance with Clauses 5.3.3.2 and 5.5.3.5.

2 Aerial earthing conductors shall comply with Clause 5.3.3.3.

3 Earthing conductors in cables, flexible cables or flexible cords shall comply with Clause 5.3.3.4.

NOTES:

1 The installation should be so prepared that electrical equipment terminals are capable of accepting the protective earthing conductors.

2 Calculation may be necessary if the choice of cross-sectional area of phase conductors has been determined by consideration of short-circuit current.

Where the active conductor comprises a number of conductors, connected in parallel, the earthing conductor shall be determined in relation to the summation of the cross-sectional areas of the individual conductors forming the largest active conductor to be protected.

Where the summation of cross-sectional areas does not correspond exactly with the nominal size of the active conductor given in Table 5.1, the conductor shall be determined in relation to the nearest larger size of active conductor.

The minimum cross-sectional area of any conductive wiring enclosure, cable component, framework or catenary wire used as an earthing medium in accordance with Clause 5.3.2.2, shall be such that the impedance of the medium is not greater than that determined for a copper earthing conductor in accordance with this Clause (Clause 5.3.3.1.2).

5.3.3.1.3 *Calculation*

The minimum cross-sectional area determined by calculation shall be not less than the value determined by the following equation (applicable only for disconnection times not less than 0.1 s but not exceeding 5 s):

$$S = \sqrt{(I^2 t / K^2)} \qquad \ldots 5.1$$

where

S = cross-sectional area of protective earthing conductor, in mm^2

I = the value of the fault current in amperes (for a.c. r.m.s. value) that would flow through the overcurrent protective device of the circuit concerned in the event of a short-circuit of negligible impedance

t = the disconnecting time of the overcurrent protective device in seconds, corresponding to the value of fault current I

COPYRIGHT

Electrical Workers Licensing Group is licenced to temporarily download this document.
auto login of Electrical Workers Licensing Group may print this document but not more than 10% of the documents subscribed to may be held in printed form at any one time.

Copyright Standards New Zealand

K = factor dependent on the material of the protective earthing conductor, the insulation and other parts, and the initial and final temperatures

NOTES:

1 Values of K for protective earthing conductors in various conditions of service are given in the AS/NZS 3008.1 series, e.g. for copper conductors not laid up with other conductors, with PVC insulation K = 136, or for bare copper conductors K = 170.

2 Examples of the application of this equation are contained in the AS/NZS 3008.1 series.

If application of the equation produces non-standard sizes, conductors of the nearest higher standard cross-sectional area shall be used.

NOTE: Maximum permissible temperatures for joints should be considered (see the AS/NZS 3008.1 series).

TABLE 5.1

MINIMUM COPPER EARTHING CONDUCTOR SIZE

Nominal size of active conductor mm²	Nominal size of copper earthing conductor, mm²	
	With copper active conductors	With aluminium active conductors
1	1*	—
1.5	1.5*	—
2.5	2.5	—
4	2.5	—
6	2.5	—
10	4	—
16	6	4
25	6	6
35	10	6
50	16	10
70	25	10
95	25	16
120	35	25
150	50	25
185	70	35
240	95	50
300	120	70
400	≥120†	≥95†
500	≥120†	≥95†
630	≥120†	≥120†
>630	≥25% of active size†	≥25% of active size†

* These earthing conductors shall only be used where incorporated in a multi-core cable or flexible cord, other than a lift travelling cable, in accordance with Clause 5.3.3.4, Items (b) and (c).

† A larger earthing conductor may be required to satisfy Clause 5.3.3.1.1.

COPYRIGHT

Copyright Standards New Zealand

auto login of Electrical Workers Licensing Group is licenced to temporarily download this document.
Electrical Workers Licensing Group may print this document but not more than 10% of the documents subscribed to may be held in printed form at any one time.

5.3.3.2 *Main earthing conductor*

Where the main earthing conductor connects the main earth terminal to an electrode (arrangement depicted in Figure 5.1), the conductor shall be determined from Table 5.1 in relation to the cross-sectional area of the largest active conductor of the consumer mains.

The cross-sectional area of such a copper main earthing conductor shall be not less than 4 mm^2 and need not be greater than 120 mm^2.

Exceptions: The size of the main earthing conductor need not be determined in relation to the size of the largest active conductor of the consumer mains under the following conditions:

1 *Where double insulation is maintained between the point of supply and the load terminals of the protective devices for the submains and final subcircuits outgoing from the main switchboard. The minimum size of the main earthing conductor may be determined in relation to the cross-sectional area of the largest active conductor of the largest outgoing submain or final subcircuit.*

2 *Where the cross-sectional area of the consumer mains is larger than that required to carry the maximum demand of the installation because of voltage-drop limitations. The minimum size of the main earthing conductor may be determined in relation to the cross-sectional area of the minimum cable size required to carry the maximum demand.*

Where the conductor connects the main earth bar to an earth bar within a substation (arrangement depicted in Figure 5.2), the conductor shall be determined from Table 5.1 or by calculation.

NOTE: In this application, the main earthing conductor forms part of the earth fault current path and its size needs to be determined based on the prospective fault current level and duration.

5.3.3.3 *Aerial earthing conductors*

The minimum size of a protective earthing conductor installed as an aerial conductor shall be selected in accordance with Clause 5.3.3.1. In addition, the cross-sectional area of the earthing conductor shall be not less than the size specified in Clause 3.12.2 and Table 3.9 according to the type of conductor and length of span.

Copyright Standards New

auto login of Electrical Workers Licensing Group is licenced to temporarily download this document.
Electrical Workers Licensing Group may print this document but not more than 10% of the documents subscribed to may be held in printed form at any one time.

auto login of Electrical Workers Licensing Group is licenced to temporarily download this document.
Electrical Workers Licensing Group may print this document but not more than 10% of the documents subscribed to may be held in printed form at any one time.

5.3.3.4 *Earthing conductors in cables, flexible cables or flexible cords*

The minimum size of a protective earthing conductor in the form of a cable, flexible cable or flexible cord shall be selected in accordance with Clause 5.3.3.1.2 and, in addition, the cross-sectional area of the earthing conductor shall comply with the following requirements appropriate to the type of cable or cord:

NOTE: AS/NZS 3191 precludes the use of aluminium conductors in flexible cords.

(a) *Single-core cable, flexible cable or flexible cord* The minimum size of a copper earthing conductor in the form of a single-core insulated cable, flexible cable or flexible cord shall be 2.5 mm^2.

Exception: Where connections in a multi-core cable require a short length of single-core insulated earthing conductor to be unenclosed, the earthing conductor size may be not less than 1 mm^2.

(b) *Multi-core cable or flexible cable* The minimum size of an earthing conductor incorporated with associated live conductors in a sheathed multi-core cable or flexible cable shall be 1 mm^2.

(c) *Multi-core flexible cord* The minimum size of an earthing conductor incorporated with the associated live conductors in the sheath of a multi-core flexible cord, shall be not less than the cross-sectional area of the largest active conductor incorporated in the flexible cord, provided that—

(i) the cross-sectional area of the largest active conductor incorporated in the flexible cord is more than 0.5 mm^2 and less than 2.5 mm^2; and

(ii) the flexible cord is used to supply a hand-held or portable appliance.

(d) *Screen and drain wires* The minimum cross-sectional area of any screen or drain wire incorporated in a sheathed cable, flexible cable or flexible cord shall be selected in accordance with Clause 5.3.3.1.2 and, in addition, shall be not less than that required by this Clause (Clause 5.3.3.4) for a protective earthing conductor.

Exception: This requirement need not apply where the screen or drain wire is separated from live conductors by double insulation or the equivalent thereof.

5.3.4 Main earthing terminal/connection or bar

In every electrical installation, a main earthing terminal/connection or bar shall be provided at the main switchboard. The following conductors shall be connected, either directly or indirectly, to form an equipotential bonding network of such conductors connected to that main earthing terminal/connection or bar:

(a) Protective earthing conductors.

COPYRIGHT

(b) Main earthing conductor.

(c) MEN connection.

(d) Equipotential bonding conductors.

(e) Functional earthing conductors, if required.

NOTE: A main earthing terminal/connection may be a soldered connection.

5.3.5 MEN connection

5.3.5.1 *General*

In every electrical installation there shall be an MEN connection (also known as the MEN link) at the main switchboard.

NOTE: The function of the MEN connection is to connect the earthing system within the electrical installation to the supply neutral conductor by means of a connection from the main earthing terminal/connection or bar to the earthing terminal on the main neutral bar (refer to Figure 5.1).

Exceptions:

1 The NE connection may be made at an earth bar within an owner or user operated supply substation (refer to Figure 5.2).

2 The NE connection may be made at an electricity distributor neutral bar within the electrical installation, e.g. at the supply substation or meter panel, if so required by the distributor.

3 The NE connection may be made through an earthing conductor or terminal, provided by the electricity distributor.

NOTE: An earthing conductor or terminal provided by the electricity distributor may include a special earthing conductor, the conductive sheath of a supply cable, or a neutral bar at a substation.

* The MEN or NE connection shall be located in an accessible position for disconnection and testing purposes.

5.3.5.2 *Size*

The MEN connection shall be a conductor complying with Clause 5.3.2 and have a cross-sectional area capable of carrying the maximum current that it may be required to carry under short-circuit conditions.

The minimum size shall be—

(a) not less than the current-carrying capacity of the main neutral conductor; or

(b) for switchboards described in Clause 2.5.5 as rated at 800 A or more per phase, as determined for a protective earthing conductor from Table 5.1 or by calculation.

COPYRIGHT

auto login of Electrical Workers Licensing Group is licenced to temporarily download this document.
Electrical Workers Licensing Group may print this document but not more than 10% of the documents subscribed to may be held in printed form at any one time.

Copyright Standards New Zealand

Exceptions: The minimum size of the MEN connection need not exceed that of the main earthing conductor in the following circumstances:

1 *Where short-circuit protection is provided on the supply side of the consumer mains.*

2 *Where the earthing of an enclosure containing consumer mains not provided with short-circuit protection on the supply side is made by connection directly to the neutral bar in accordance with Clause 5.5.3.5.*

3 *Where double insulation of the consumer mains conductors is maintained up to the supply terminal/s of the service protective device/s, and short-circuit protection is provided by such device/s.*

NOTE: An electricity distributor's upstream service protective device may provide short-circuit protection of consumer mains.

5.3.5.3 *Identification*

Where the MEN connection is insulated, the insulation shall be coloured green or in a combination of green and yellow, in accordance with Clause 3.8.

5.3.6 Earth electrodes

5.3.6.1 *General*

The connection of the electrical installation earthing system to the general mass of earth shall be achieved by means of an earth electrode.

NOTE: No specific value of resistance to earth is required by this Standard for the earth electrode at an electrical installation connected to a MEN system. However, the impedance of the combined earthing system of the electrical installation connected to an MEN system is required to meet the earth fault-loop impedance requirements specified in Clause 5.7. AS/NZS 3017 provides guidance on methods of measurement of resistance to earth and earth fault-loop impedance.

5.3.6.2 *Types*

Materials and dimensions of earth electrodes shall be selected to withstand corrosion and to have adequate mechanical strength.

NOTE: Consideration should be given to the nature of the soil and environmental conditions.

Earth electrodes shall be of a type and shall be installed in accordance with Table 5.2.

Exception: Conductive reinforcement of—

(a) concrete foundations embedded directly in the soil; or

(b) concrete foundations of a building or floor slab in contact with the ground and not impeded by a continuous insulating barrier,

may be used in lieu of an electrode specified in Table 5.2.

COPYRIGHT

auto login of Electrical Workers Licensing Group is licenced to temporarily download this document.
Electrical Workers Licensing Group may print this document but not more than 10% of the documents subscribed to may be held in printed form at any one time.

Copyright Standards New Zealand

auto login of Electrical Workers Licensing Group is licenced to temporarily download this document.
Electrical Workers Licensing Group may print this document but not more than 10% of the documents subscribed to may be held in printed form at any one time.

TABLE 5.2
ACCEPTABLE EARTH ELECTRODES

Material	Surface treatment	Minimum dimensions	Minimum surface treatment thickness
Vertical electrodes			
Steel	Copper clad	∅12 mm circular rod	250 μm
	Copper plated	∅12 mm circular rod	250 μm
*	Stainless (including clad with stainless)	∅12 mm circular rod	500 μm
	Hot dipped galvanized	∅16 mm circular rod	63 μm
	Hot dipped galvanized	Section with minimum cross-sectional area of 200 mm^2 and with no part less than 3 mm thick	63 μm
Non-ferrous (excluding aluminium)	Solid	12 mm	N/A
Horizontal (strip) electrodes			
Copper rod	Solid	∅7 mm circular	N/A
Copper strip	Solid	25 mm × 1.6 mm	N/A
Copper pipe	Bare	∅15 mm circular × 2.45 mm wall thickness	N/A
Copper cable	Bare	25 mm^2	N/A
* Steel pipe	Hot dipped galvanized	∅20 mm circular × 3 mm wall thickness	63 μm
Steel strip	Hot dipped galvanized	40 mm × 3 mm	63 μm

5.3.6.3 *Installation*

Vertical-type earth electrodes shall be driven to a minimum depth of—

(a) in Australia, 1.2 m; and **A**

(b) in New Zealand, 1.8 m. **NZ**

Strip-type earth electrodes buried in a horizontal trench shall be laid at a depth having not less than 0.5 m cover and with a minimum horizontal length of—

(i) in Australia, 3 m; and **A**

(ii) in New Zealand, 7.5 m. **NZ**

Copyright Standards New Zealand

5.3.6.4 *Location*

Earth electrodes shall be installed in a location that satisfies the following conditions:

(a) The electrode maintains effective contact with moist soil that is not subject to excessive drying out.

NOTE: This condition is deemed to be satisfied by locating the electrode—

(a) external to the building in ground that is exposed to the weather; or

(b) in other locations where the ground remains moist because of soil conditions or covers that reduce loss of moisture.

(b) The electrode is separated from conductive enclosures of other buried services, such as water, gas, telecommunications and flammable liquid, in order to reduce possible electrolytic action affecting the electrode or the other service.

NOTE: Separation distances are specified in Table 3.7.

(c) The main earthing conductor connection to an electrode is accessible, in accordance with Clause 5.5.1.2.

The location of the earth electrode shall be identified at the main switchboard.

5.3.7 Functional earthing conductors

Functional earthing conductors that are provided solely to ensure correct operation of electrical equipment, or to permit reliable and proper functioning of electrical installations, need not comply with requirements for main and protective earthing conductors.

Where earthing for combined protective and functional purposes is required, the requirements for protective purposes shall prevail.

NOTES:

1 The functional earth connection should be independent of the protective earth, otherwise it may not comply with the manufacturer's requirements. Thus connection would be limited to the main earth connection point.

2 Where a 'clean earth' is specified for a particular item of electrical equipment, the manufacturer of the electrical equipment should be consulted in order to confirm the necessary arrangements.

5.4 EARTHING OF EQUIPMENT

5.4.1 General

5.4.1.1 *Exposed conductive parts*

The exposed conductive parts of electrical equipment shall be earthed where the electrical equipment is—

(a) installed or could operate in an earthed situation; or

COPYRIGHT

Copyright Standards New Zealand

auto login of Electrical Workers Licensing Group is licenced to temporarily download this document.
Electrical Workers Licensing Group may print this document but not more than 10% of the documents subscribed to may be held in printed form at any one time.

(b) not installed in an earthed situation but any exposed conductive part of the electrical equipment is electrically continuous with an extraneous conductive part that is located in an earthed situation.

Exposed conductive parts of electrical equipment protected by electrical separation in accordance with Clause 7.4.3(c) shall not be earthed.

Exposed conductive parts need not be earthed if supplied by a SELV or PELV system in accordance with Clause 7.5.

Exception: Electrical equipment need not be earthed where the wiring of the electrical equipment conforms to protection by the use of double insulation, where the following conditions apply:

(a) Electrical equipment complying with AS/NZS 3100 for double insulation need not be earthed.

(b) Installation wiring entering equipment

Where cables connecting electrical equipment having double insulation enter the electrical equipment in such a manner that they may come into contact with accessible external conductive parts of the electrical equipment, the cables shall be of a type affording double insulation.

NOTE: Where double insulation is afforded by means of insulated and sheathed cables alone, care should be taken that screws or nails forming part of the structure or equipment are not liable to penetrate the cable, particularly where the cable is subject to movement during maintenance or other operations. See also Clauses 3.9.3 and 3.9.4.

(c) Internal electrical equipment wiring

Conductors within electrical equipment having double insulation shall be protected, secured or insulated so that, if any one conductor becomes detached from its termination, neither the conductor nor its functional insulation can come into contact with accessible conductive parts.

The attachment of one conductor to another by tying, lacing, clipping or the like, in such a manner as to prevent either conductor coming into contact with accessible conductive parts if it becomes detached from its termination, shall be deemed to comply with this requirement.

5.4.1.2 *Conductive building materials*

Conductive building materials shall be earthed in accordance with Clause 5.4.6.

5.4.1.3 *Connection of electrical equipment to earth*

Equipment required to be earthed shall be arranged for connection to—

(a) protective earthing conductors in the form of cables, cords, busbars or similar forms of current-carrying material; or

COPYRIGHT

Copyright Standards New Zealand

auto login of Electrical Workers Licensing Group is licenced to temporarily download this document.
Electrical Workers Licensing Group may print this document but not more than 10% of the documents subscribed to may be held in printed form at any one time.

(b) another earthing medium, such as conductive parts of cables, wiring enclosures, switchboard framework or the like, in accordance with Clause 5.3.2.

Equipotential bonding shall be arranged in accordance with Clause 5.6.

5.4.2 Socket-outlets

The earthing contact of every socket-outlet shall be earthed.

Exceptions:

1 *An earthing contact of a socket-outlet supplied as a separated circuit shall be bonded to the protective bonding system, in accordance with Clause 7.4.*

2 *In accordance with Clause 7.5.10, a socket-outlet supplied as an extra-low voltage circuit shall not be provided with an earthing contact.*

5.4.3 Lighting points

A protective earthing conductor, connected to a terminal or suitably insulated and enclosed, shall be provided at every lighting point, including transformers supplying ELV lighting systems.

Exceptions:

1 *A protective earthing conductor shall not be provided for luminaires located in Zone 0 of swimming and spa pools installed in accordance with Clause 6.3.4.5 and Zone 0 of fountains and water features installed in accordance with Clause 6.4.4.5.*

2 *A protective earthing conductor need not be provided for the following lighting points:*

- *Festoon-type lampholders of the all-insulated type.*
- *Lighting points where the luminaire is earthed by attachment to screwed conductive conduit or pipe in accordance with Clause 5.3.2.3.*
- *Lighting points consisting of a luminaire installed outdoors on a non-conductive pole where the luminaire is not in an earthed situation.*
- *ELV lighting points.*

5.4.4 Luminaires

The exposed conductive parts of luminaires shall be earthed.

Exceptions: Luminaires need not be earthed in the following circumstances:

1 *Where earthing of equipment is not required in accordance with Clause 5.4.1.*

2 *Where a protective earthing conductor is not required in accordance with Clause 5.4.3.*

COPYRIGHT

Copyright Standards New Zealand

auto login of Electrical Workers Licensing Group is licenced to temporarily download this document.
Electrical Workers Licensing Group may print this document but not more than 10% of the documents subscribed to may be held in printed form at any one time.

3 Where installed outdoors on a non-conductive pole and the luminaire is not in an earthed situation.

4 Where supplied at ELV in accordance with Clause 7.5.

5.4.5 Conductive supports for aerial conductors

Conductive poles, posts, struts, brackets, stay wires and other conductive supports for low voltage aerial conductors shall be earthed.

Exceptions:

1 Conductive supports effectively and permanently separated from all conductors by double insulation need not be earthed. An acceptable method would include use of XLPE type X-90UV cable to AS/NZS 3560 with insulated strain clamps and double insulated connectors to AS/NZS 4396.

2 Conductive supports effectively and permanently separated from aerial conductors by insulators mounted on timber, or other insulating supports, need not be earthed where the space between the conductors and the conductive supports is not less than—

- *for single-core conductors, half the space between the conductors as specified in Clause 3.12.5.4; or*
- *for multi-core conductors, 100 mm.*

3 Conductive supports beyond arm's reach and effectively and permanently separated from any conductive guttering, roof or structural metalwork by a clearance or creepage distance of at least 25 mm need not be earthed.

4 Any stay wire that is attached to a conductive support fitted with a robust strain insulator so that any portion of the stay wire that is within arm's reach and that is readily accessible is isolated from the remainder of the stay wire, need not be earthed.

5.4.6 Structural metalwork including conductive building materials

5.4.6.1 *General*

* Structural metalwork forming the frame of a structure containing an electrical installation or part thereof, including sheds or similar structures that are permanently connected to the electrical installation wiring, shall be earthed. The size of the earthing conductor used for earthing the frames shall be determined from Clause 5.3.3 in relation to the cross-sectional area of the largest active conductor that is contained within the framework of that electrical installation.

* For combined outbuildings, each outbuilding shall contain its own individual earthing connection to the conductive frames within that outbuilding. A1

auto login of Electrical Workers Licensing Group is licenced to temporarily download this document.
Electrical Workers Licensing Group may print this document but not more than 10% of the documents subscribed to may be held in printed form at any one time.

Copyright Standards New Zealand

All other conductive building materials shall be earthed where—

(a) the risk of contact with live parts of electrical equipment or insulated, unsheathed cables exists; or

(b) double insulation of cables in contact with conductive building materials is not permanently and effectively maintained.

The breaking of a conductor at a termination shall not result in contact between unearthed conductive building material and—

(i) live parts; or

(ii) parts separated from live parts by single insulation.

This requirement may be satisfied by—

(A) restraining the conductor by tying, lacing or clipping; or

(B) containing the termination within a non-conductive shroud or enclosure.

5.4.6.2 *Connection to protective earthing conductors*

Earthing of parts of structural metalwork, including conductive building materials, may be effected by the connection of a protective earthing conductor of appropriate size at one point of the metalwork, provided that the resistance between the earth bar and any part required to be earthed does not exceed 0.5 Ω.

5.4.7 Submersible pumps

The exposed conductive parts of a submersible pump shall be earthed by means of a protective earthing conductor that is terminated at the pump motor.

The termination shall be made in a manner that provides sealing against ingress of moisture, and protection against possible mechanical damage and corrosion likely to occur at the point of installation.

This requirement may be satisfied by terminating the protective earthing conductor on the motor at—

(a) a terminal incorporated in a housing; or

(b) an internal or external constructional component, in accordance with Clause 5.5.6.2.

5.4.8 Variable frequency devices

Devices that produce high frequency currents in the protective earth may produce touch voltages that are dangerous to persons and livestock.

NOTES:

1 The touch voltages may be as much as a 100 V but the manufacturer's advice should be sought when installing this type of device. These high frequency voltages may not be detectable using normal 50 Hz test instruments. An oscilloscope and ballast resistor is required.

COPYRIGHT

Copyright Standards New Zealand

auto login of Electrical Workers Licensing Group is licenced to temporarily download this document.
Electrical Workers Licensing Group may print this document but not more than 10% of the documents subscribed to may be held in printed form at any one time.

2 Attention is drawn to the safety requirements for electronic equipment in AS 62103.

5.5 EARTHING ARRANGEMENTS

5.5.1 Main earthing conductor

5.5.1.1 *Arrangement*

An earthing conductor, deemed to be the main earthing conductor, shall be taken from the main earthing terminal/connection or bar at the main switchboard to an earth electrode complying with Clause 5.3.6.

The main earthing conductor shall be run in as direct a manner as possible and shall not be directly connected to the terminal of any accessory, luminaire or appliance.

Exceptions:

1 The main earthing conductor may be taken to an earth bar within a customer's substation forming part of the electrical installation.

2 The main earthing conductor may be taken to an earthing conductor or terminal, provided by the distributor or, if required by the distributor, to a distributor neutral bar within the electrical installation.

NOTE: An earthing conductor or terminal provided by the distributor may include a special earthing conductor, the conductive sheath of a supply cable, or a neutral bar at a substation.

5.5.1.2 *Connection to earth electrode*

The connection of the main earthing conductor to the earth electrode shall—

(a) be accessible for visual inspection and for the purposes of testing;

NOTES:

1 Where necessary, access by means of an underground pit with its cover accessible above ground is considered acceptable, provided adequate space is available for the connection of test leads and the pit is suitably identified as to its purpose.

2 Where the reinforcing steel is used as the earth electrode, this testing condition is deemed to be satisfied by the provision of a test point on the main earthing electrode.

(b) be made by means of a suitable device, in accordance with the manufacturer's specification, that provides adequate electrical conductivity;

(c) provide protection against mechanical damage likely to occur to the main earthing conductor or the connection to the electrode at the location, in accordance with Clause 5.5.5.2; and

(d) be suitably protected against corrosion in accordance with Clause 5.5.5.3.

NOTE: For location of earth electrodes, see Clause 5.3.6.4.

COPYRIGHT

auto login of Electrical Workers Licensing Group is licenced to temporarily download this document.
Electrical Workers Licensing Group may print this document but not more than 10% of the documents subscribed to may be held in printed form at any one time.

Copyright Standards New Zealand

5.5.1.3 *Labelling*

The main earthing conductor shall have a permanent label attached at the connection to the earth electrode with a legible warning against disconnection in the following form:

WARNING: MAIN ELECTRICAL EARTHING CONDUCTOR—DO NOT DISCONNECT.

Exception: Where the method of connection to the electrode precludes disconnection, this requirement need not apply.

5.5.1.4 *Resistance*

The resistance of the main earthing conductor, measured between the main earthing terminal/connection or bar and the earth electrode, including the connection to the earth electrode, shall be not more than 0.5 Ω.

5.5.2 Protective earthing conductors

5.5.2.1 *Arrangement*

All protective earthing conductors shall be directly connected to the main earthing conductor or to another point on an earthing system that is connected to the main earthing conductor. Protective earthing conductors shall not normally carry load current.

The connection shall be made at one or a combination of the following points:

(a) An earthing terminal/connection or bar at the main switchboard provided specifically for the connection of earthing conductors and that is directly connected to the main earthing conductor.

(b) Any point on the main earthing conductor.

(c) An earthing terminal/connection or bar at a distribution board provided specifically for the connection of protective earthing conductors and arranged to comply with Clause 5.5.2.2.

(d) Any point on a protective earthing conductor providing facilities for earthing at a distribution board and arranged to comply with Clause 5.5.2.2.

NOTES:

1 Examples of earthing connections are shown in Figure 5.3.

2 Refer to Clause 5.5.3.1 where the earthing system in an outbuilding is to be treated as a separate MEN installation.

5.5.2.2 *Restricted connections*

5.5.2.2.1 *Circuits*

The protective earthing conductor for a circuit that is incorporated in the same cable sheath or wiring enclosure as the associated live conductors for the circuit shall only be used for the earthing of equipment supplied from the circuit.

COPYRIGHT

Copyright Standards New Zealand

auto login of Electrical Workers Licensing Group is licenced to temporarily download this document.
Electrical Workers Licensing Group may print this document but not more than 10% of the documents subscribed to may be held in printed form at any one time.

Exception: This does not preclude an unenclosed common protective earthing conductor being used for a number of different circuits.

5.5.2.2.2 *Earthing of equipment*

A protective earthing conductor that originates at a distribution board, in accordance with Clause 5.5.2.1, Item (c) or (d), shall not be used for the earthing of electrical equipment that is supplied from another switchboard.

5.5.2.2.3 *Earthing facilities for distribution boards*

A protective earthing conductor that originates at a distribution board, in accordance with Clause 5.5.2.1, Item (c) or (d), shall not be used for the provision of earthing facilities for another distribution board.

Exceptions:

1 *This requirement need not apply where earthing facilities for a distribution board originate from the same distribution board as the associated active conductors supplying the distribution board.*

2 *A common protective earthing conductor connected to the main earthing conductor in accordance with Clause 5.5.2.1, Item (a) or (b) may be arranged to provide earthing facilities at a number of distribution boards provided that—*

- *the continuity of the protective earthing conductor shall not be dependent on a terminal at a distribution board; and*
- *a direct connection shall be made between the common protective earthing conductor and any branch protective earthing conductor to a distribution board.*

Copyright Standards New Zealand

auto login of Electrical Workers Licensing Group is licenced to temporarily download this document.
Electrical Workers Licensing Group may print this document but not more than 10% of the documents subscribed to may be held in printed form at any one time.

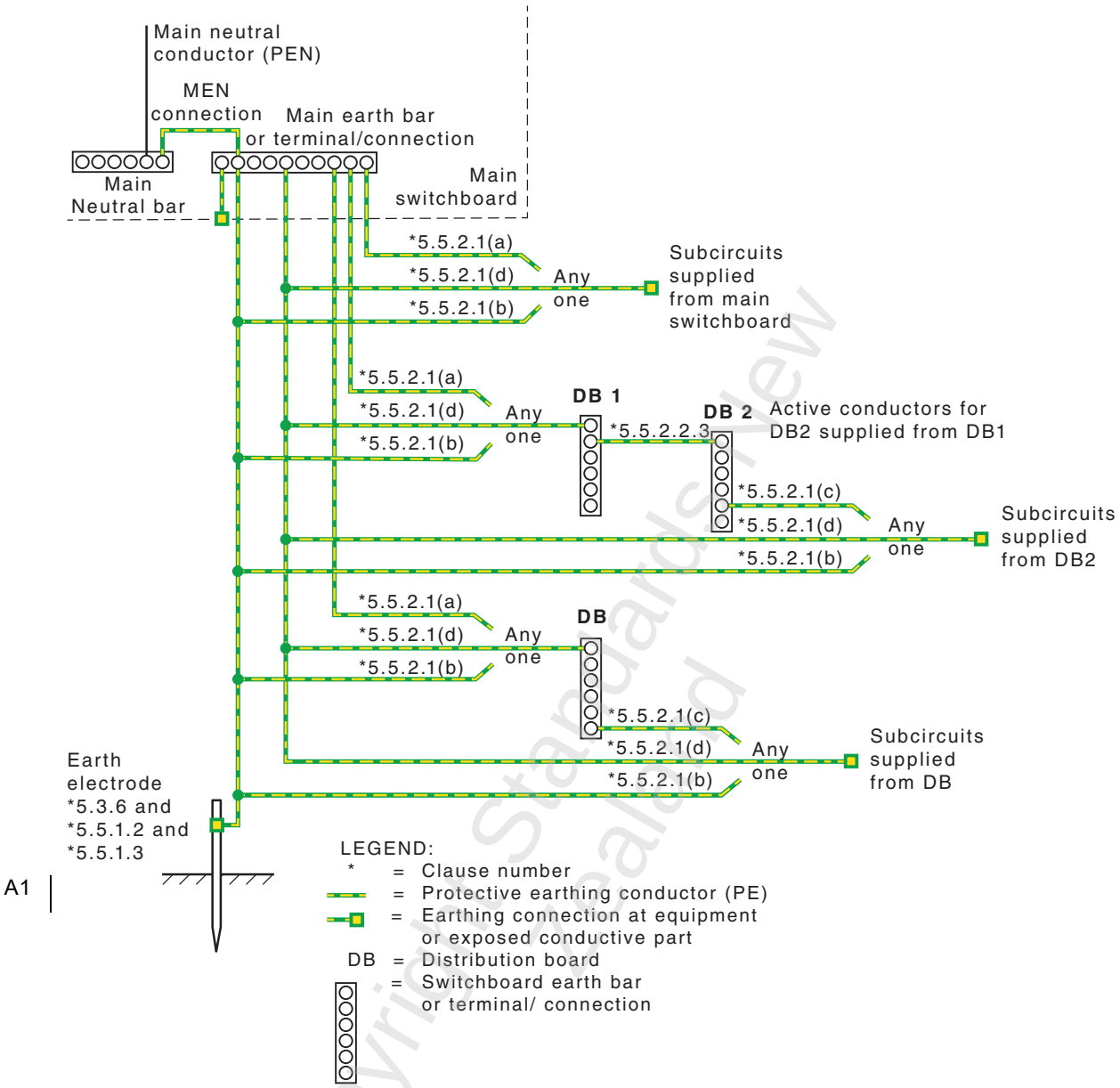

FIGURE 5.3 EXAMPLES OF EARTHING ARRANGEMENTS
(CLAUSES 5.5.2.1 AND 5.5.2.2.3)

5.5.3 Particular methods of earthing

5.5.3.1 *Outbuildings*

All parts of an electrical installation in or on an outbuilding that are required to be earthed in accordance with Clause 5.4 shall be earthed by one of the following methods:

* (a) *Individual outbuildings* The earthing system in an individual outbuilding shall be either—

(i) connected to a protective earthing conductor connected in accordance with Clause 5.5.2.1; or

COPYRIGHT

Copyright Standards New Zealand

auto login of Electrical Workers Licensing Group is licenced to temporarily download this document.
Electrical Workers Licensing Group may print this document but not more than 10% of the documents subscribed to may be held in printed form at any one time.

(ii) connected as a separate MEN installation in accordance with Clauses 5.5.3.1(c) and 5.5.3.2.

* (b) *Combined outbuildings* The earthing system in a combined outbuilding shall be connected to a protective earthing conductor, connected in accordance with Clause 5.5.2.1, and shall not be connected as a separate MEN installation.

(c) *Separate MEN installation* The earthing system in a separate MEN installation shall be connected to the submain neutral conductor supplying the outbuilding. In this case, the submain neutral conductor supplying the outbuilding is a combined protective earthing and neutral (PEN) conductor.

The electrical installation in the outbuilding shall be regarded as a separate electrical installation, and shall be earthed in accordance with other relevant Clauses of this Standard. The following requirements and recommendations also apply:

(i) There shall be not more than one MEN connection in any one individual outbuilding.

(ii) The distribution board in the outbuilding shall be regarded as a main switchboard for the purpose of effecting the MEN connection.

(iii) The earthing conductor between the distribution board in the outbuilding and the earth electrode shall be regarded as a main earthing conductor for the purposes of earthing of the electrical installation in the outbuilding.

(iv) The submain supplying the outbuilding shall be run either—

(A) directly from the main switchboard; or

(B) from the main switchboard via distribution boards in one or more other outbuildings, to one distribution board only in the outbuilding.

(v) Where the combined protective earthing and neutral (PEN) conductor supplying the distribution board in the outbuilding runs from the main switchboard via distribution boards in one or more other outbuildings, the terminals on such distribution boards shall not be depended on for continuity of the combined protective earthing and neutral (PEN) conductor.

(vi) The combined protective earthing and neutral (PEN) conductor supplying the distribution board in the outbuilding should not be connected in parallel, by means of earthing or equipotential bonding conductors, with conductive pipes or structural metal within the electrical installation.

auto login of Electrical Workers Licensing Group is licenced to temporarily download this document.
Electrical Workers Licensing Group may print this document but not more than 10% of the documents subscribed to may be held in printed form at any one time.

Copyright Standards New Zealand

NOTES:

1 Refer to Figures 5.4 and 5.5 for examples of earthing of individual and combined outbuildings.

2 Particular care is needed where conductive pipes and such items as telecommunication cable sheaths, covered walkways, etc. may be continuous between separate buildings and thus establish a parallel earth/ neutral path.

A1

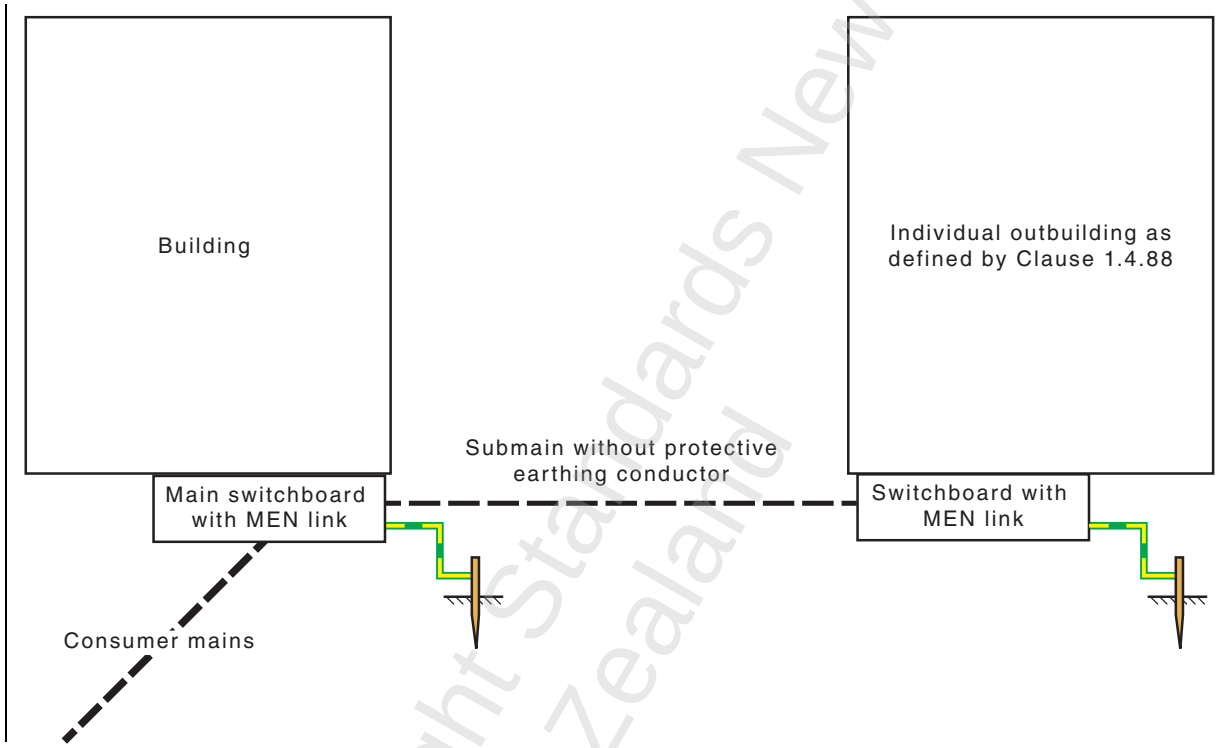

NOTE: An individual outbuilding may also be earthed using a submain earth cable in lieu of its own MEN connection and earth electrode.

* FIGURE 5.4 EXAMPLE OF EARTHING OF AN INDIVIDUAL OUTBUILDING [CLAUSE 5.5.3.1(a)]

Copyright Standards New Zealand

auto login of Electrical Workers Licensing Group is licenced to temporarily download this document.
Electrical Workers Licensing Group may print this document but not more than 10% of the documents subscribed to may be held in printed form at any one time.

A1

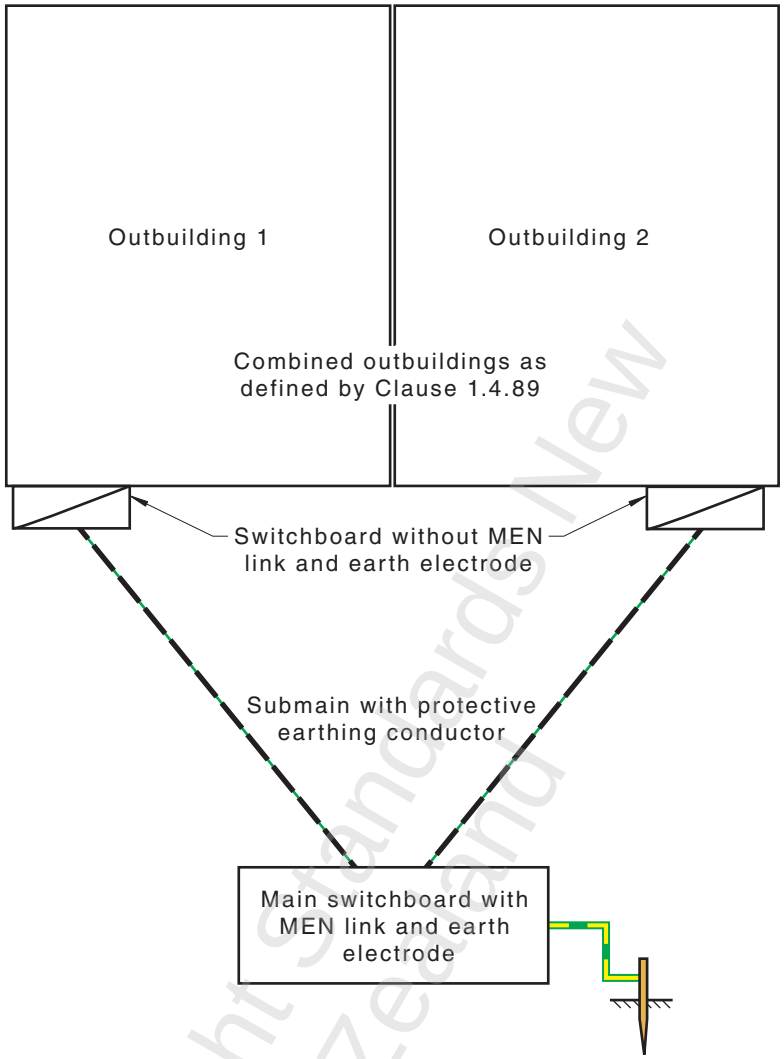

NOTE: Combined outbuildings shall not be earthed as separate MEN installations.

* FIGURE 5.5 EXAMPLE OF EARTHING OF COMBINED OUTBUILDINGS [CLAUSE 5.5.3.1(b)]

5.5.3.2 *Wiring systems*

(a) *Conductive wiring enclosures* Exposed conductive parts of wiring enclosures shall be earthed at the end adjacent to the switchboard or accessory at which the wiring enclosure originates.

(b) *Conductive sheaths, armours and screens of cables or cords* The conductive sheathing, armouring or screening of cables or cords required to be earthed shall be earthed at the end adjacent to the switchboard or accessory at which the cable or cord originates.

Copyright Standards New Zealand

auto login of Electrical Workers Licensing Group is licenced to temporarily download this document.
Electrical Workers Licensing Group may print this document but not more than 10% of the documents subscribed to may be held in printed form at any one time.

Exceptions:

1 A conductive screen or braid embodied in a cable or flexible cord need not be earthed where—

- *it is separated from the live conductors by double insulation;*
- *sheathed or covered overall with non-conductive material; and*
- *all joints to and terminations of the screen or braid are suitably separated from exposed conductive and live parts.*

2 A conductive cable sheathing, armouring, screening or braiding need not be earthed where, in accordance with Clause 5.4.1, earthing is not required.

5.5.3.3 *Electrical equipment supplied by flexible cord or flexible cable*

The exposed conductive parts of electrical equipment supplied by flexible cord or flexible cable shall be earthed by connection to a protective earthing conductor incorporated with the associated live conductors in the sheath, braid or enclosure of the supply cord or cable.

5.5.3.4 *Switchboards*

Electrical equipment mounted on the conductive framework of a switchboard may be earthed in accordance with Clause 5.3.2.3(c).

5.5.3.5 *Unprotected consumer mains*

Exposed conductive parts associated with consumer mains not provided with short-circuit protection on the supply side shall be earthed by a conductor or by direct connection to an earth bar such that either has a current-carrying capacity not less than that of the main neutral conductor.

A1 Unprotected consumer mains are those that are not protected by a service protective device as shown in Figure 2.1.

NOTE: Short-circuit of an unprotected active conductor to a switchboard surround, riser bracket, etc. will cause the earthing conductor to continuously carry the maximum fault current available through those consumer mains. Reduced sizes for protective earthing conductors in other situations are permitted because the fault current is of limited duration.

This conductor shall be connected to—

(a) the main neutral conductor or bar [see Figure 5.6(A)]; or

(b) the main earthing terminal/connection or bar, in which case, in accordance with Clause 5.3.5.2, the cross-sectional area of the MEN connection shall be not less than that of the main neutral conductor [see Figure 5.6(B)].

Electrical Workers Licensing Group is licenced to temporarily download this document.
auto login of Electrical Workers Licensing Group may print this document but not more than 10% of the documents subscribed to may be held in printed form at any one time.

Copyright Standards New Zealand

Exception:

Where double insulation of the consumer mains conductors is maintained up to the supply terminal/s of the service protective device/s, and short-circuit protection is provided by that device, this requirement need not apply [see Figure 5.6(C)].

NOTES:

1 A system that is deemed to provide double insulation for aerial conductors would include use of XLPE type X-90UV cable to AS/NZS 3560 with insulated strain clamps and double insulated connectors to AS/NZS 4396.

2 Exposed conductive parts associated with consumer mains include—

(a) switchboard cases, surrounds and enclosures;

(b) wiring enclosures;

(c) boxes and accessories; and

(d) supports for aerial conductors.

3 A distributor's upstream service protective device may provide short-circuit protection of consumer mains.

Copyright Standards New Zealand

auto login of Electrical Workers Licensing Group is licenced to temporarily download this document.
Electrical Workers Licensing Group may print this document but not more than 10% of the documents subscribed to may be held in printed form at any one time.

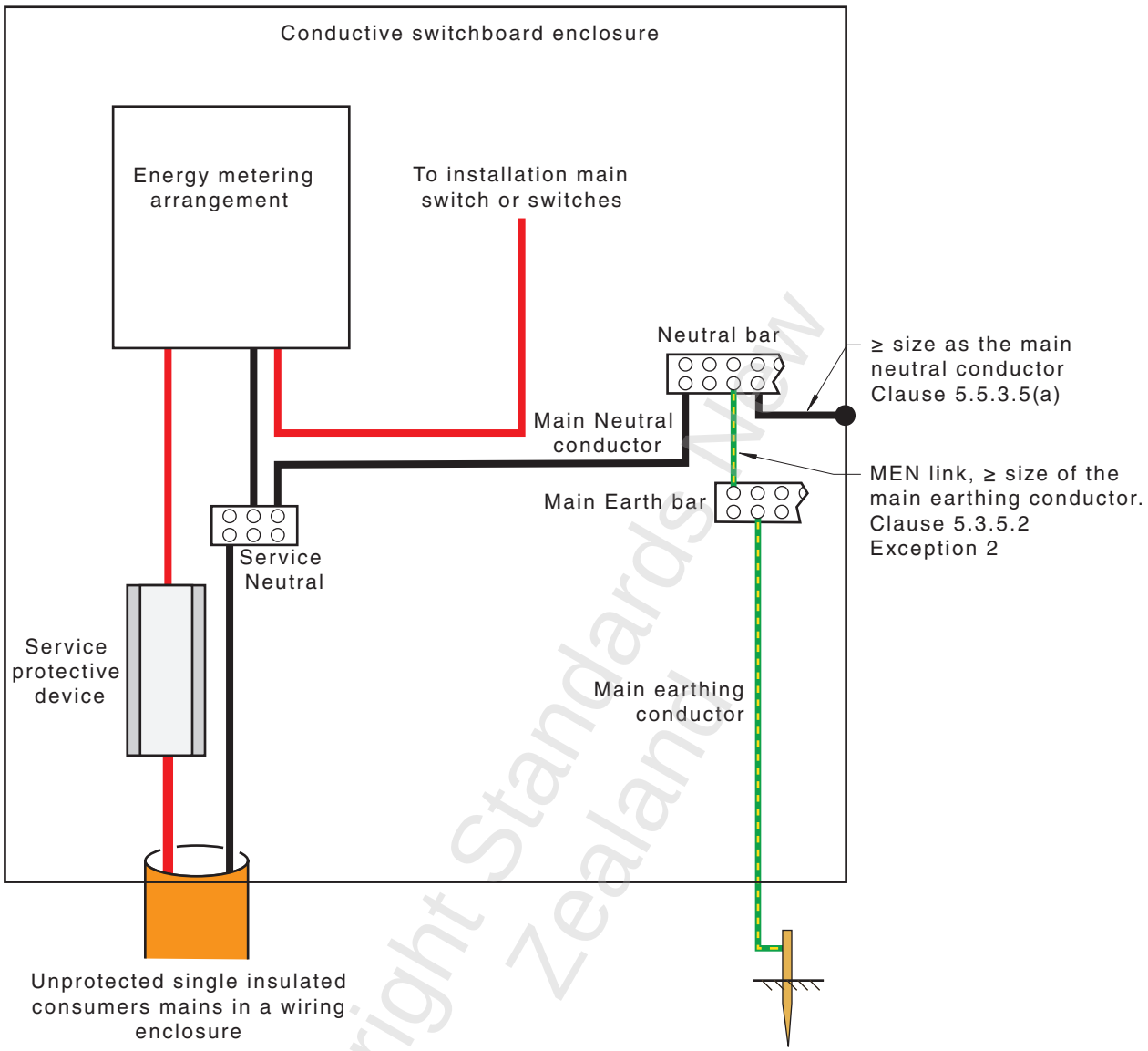

FIGURE 5.6(A) EARTHING ARRANGEMENT FOR CONDUCTIVE SWITCHBOARD ENCLOSURES ASSOCIATED WITH UNPROTECTED CONSUMER MAINS [CLAUSE 5.5.3.5(a)]

Copyright Standards New Zealand

auto login of Electrical Workers Licensing Group is licenced to temporarily download this document.
Electrical Workers Licensing Group may print this document but not more than 10% of the documents subscribed to may be held in printed form at any one time.

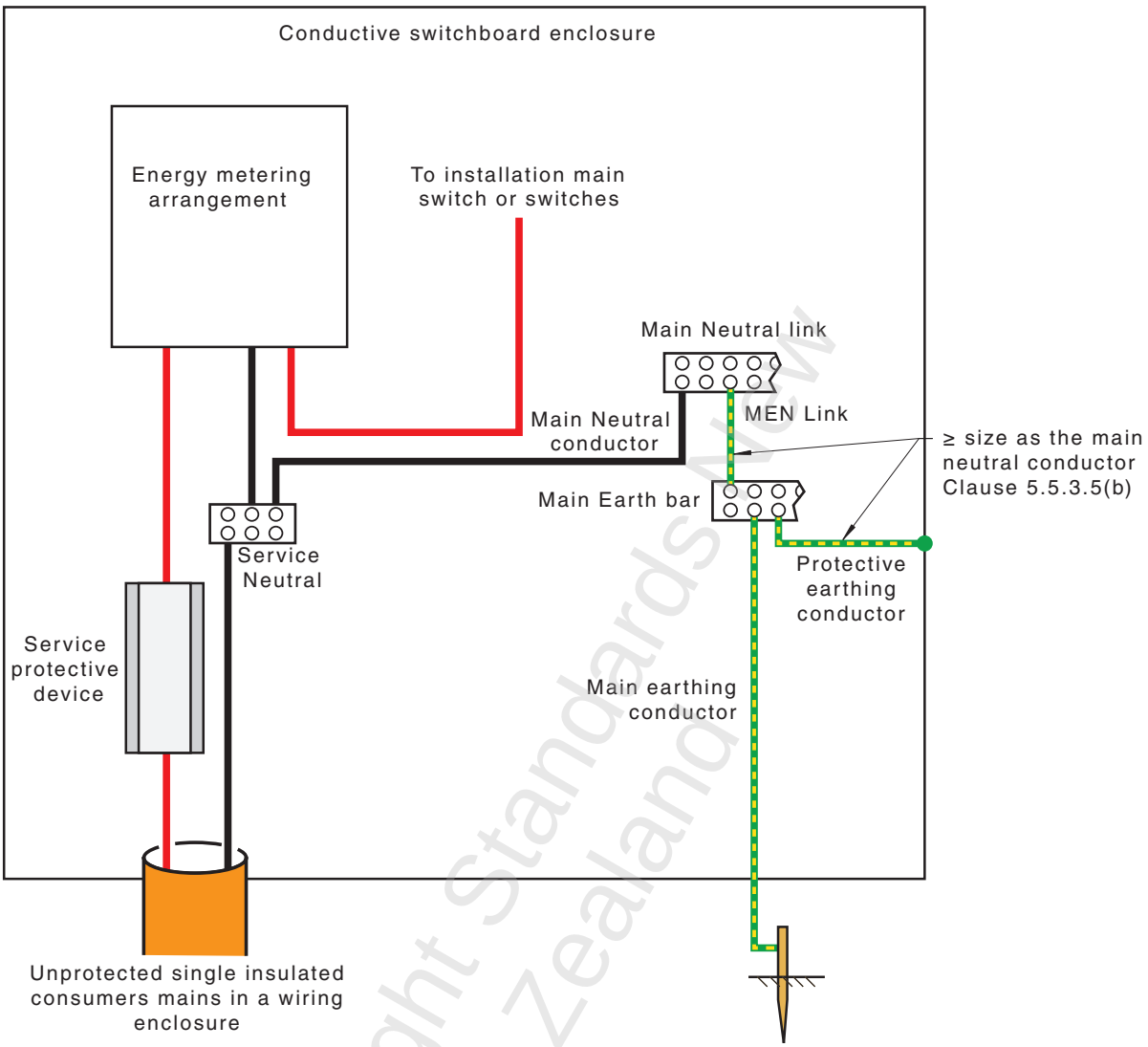

FIGURE 5.6(B) EARTHING ARRANGEMENT FOR CONDUCTIVE SWITCHBOARD ENCLOSURES ASSOCIATED WITH UNPROTECTED CONSUMER MAINS [CLAUSE 5.5.3.5(b)]

Copyright Standards New Zealand

auto login of Electrical Workers Licensing Group is licenced to temporarily download this document.
Electrical Workers Licensing Group may print this document but not more than 10% of the documents subscribed to may be held in printed form at any one time.

auto login of Electrical Workers Licensing Group is licenced to temporarily download this document.
Electrical Workers Licensing Group may print this document but not more than 10% of the documents subscribed to may be held in printed form at any one time.

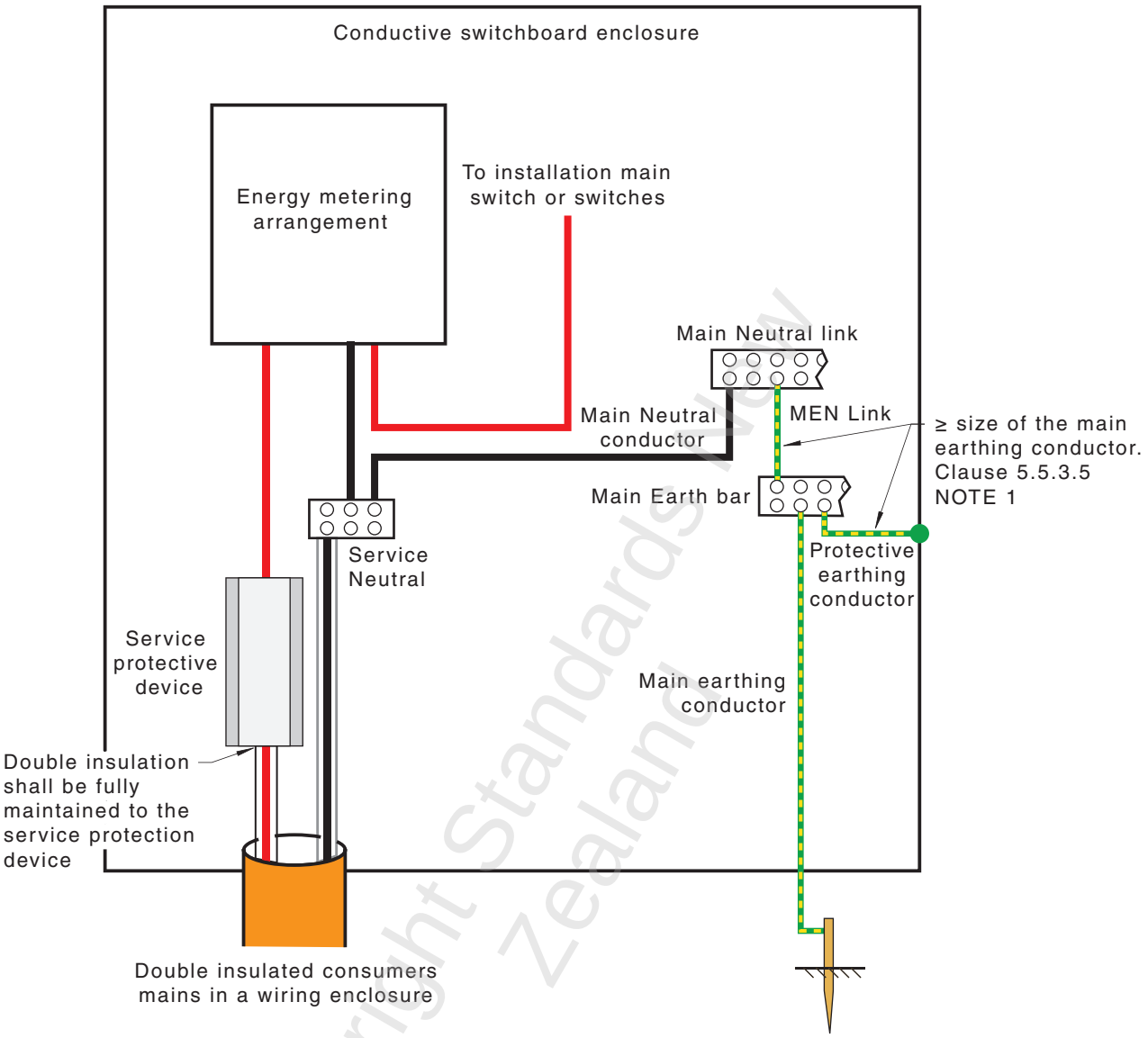

FIGURE 5.6(C) EARTHING ARRANGEMENT FOR CONDUCTIVE SWITCHBOARD ENCLOSURES ASSOCIATED WITH UNPROTECTED CONSUMER MAINS (CLAUSE 5.5.3.5 NOTE 1)

5.5.4 Continuity

5.5.4.1 *General*

Earthing conductors shall be suitably protected against mechanical and chemical deterioration and electrodynamic forces. Star or cutting washers or similar devices that effectively cut through paint or similar coatings are considered to be an acceptable method of ensuring earth continuity across bolted or clamped joints between metal equipment panels or framework that have painted or coated surfaces.

COPYRIGHT

5.5.4.2 *Conductive wiring enclosures*

Conductive wiring enclosures and associated fittings that are required to be earthed, including those used as an earthing medium, shall be mechanically and electrically continuous. The impedance of such a wiring enclosure earthing arrangement shall be in accordance with Clause 5.7.

5.5.4.3 *Conductive sheaths, armours and screens of cables*

Conductive sheaths, armours and screens of cables and associated fittings that are required to be earthed, including those used as an earthing medium, shall be mechanically and electrically continuous. The impedance of such cable components and associated fittings providing earth continuity shall be in accordance with that required for a copper earthing conductor determined in accordance with Clause 5.3.3.

5.5.4.4 *Connecting devices*

Where electrical equipment is connected to the installation wiring by a connection in the form of a plug and socket-outlet, appliance plug or similar connecting device, any connection of exposed conductive parts to earth shall be—

(a) made automatically, before the live connections are made, when any plug portion is inserted in the corresponding socket-outlet; and

(b) broken automatically, not before the live connections are broken, when any plug portion is withdrawn from the corresponding socket-outlet.

5.5.5 Installation

5.5.5.1 *General*

All earthing conductors and other forms of earthing medium shall be installed in a manner that provides adequate protection against likely mechanical damage, inadvertent interference and chemical deterioration.

NOTE: In areas of high lightning activity, the provisions of AS/NZS 1768 should be considered.

5.5.5.2 *Protection against mechanical damage*

Earthing conductors shall be protected against becoming displaced, damaged or cut by means of one or a combination of the following methods appropriate to the expected conditions of mechanical damage at the point of installation:

(a) Fixing by means of clamps, clips, saddles, clouts or similar devices that shall not pass between the strands of the conductor or damage the conductor.

(b) Guarding by metallic barriers or other robust material.

(c) Installing in a wiring enclosure, in accordance with Clause 3.10.2.

auto login of Electrical Workers Licensing Group is licenced to temporarily download this document.
Electrical Workers Licensing Group may print this document but not more than 10% of the documents subscribed to may be held in printed form at any one time.

Copyright Standards New Zealand

5.5.5.3 *Protection against corrosion*

Earthing conductors, and any associated fixing devices, shall be protected from corrosion, including the effects of moisture or contact with dissimilar metals.

Earthing conductors and associated fittings and fixing devices shall comply with the following requirements:

(a) *Underground and damp situations* All joints and terminations installed in an underground location or other damp situation shall be sealed to prevent the entry of moisture. All associated fittings and fixing devices in such locations shall be constructed of, or protected by, corrosion-resistant material.

(b) *Exposed to the weather* All joints, terminations, fittings and fixtures in locations exposed to the weather shall be constructed of, or protected by, corrosion-resistant material in such a manner that will prevent the entry of moisture affecting the conductor.

5.5.5.4 *Aerial earthing conductors*

Aerial earthing conductors shall be—

(a) supported in accordance with Clause 3.12.5; and

(b) identified in accordance with Clause 3.8.3.4.

5.5.5.5 *Buried earthing conductors*

(a) *Installation conditions* A bare or insulated earthing conductor buried direct in the ground or installed in an underground enclosure shall be subject to the depth of laying and mechanical protection requirements appropriate to the method of installation for a sheathed conductor, in accordance with Clause 3.11.

(b) *Bare earthing conductors* In addition, bare earthing conductors shall be buried direct in the ground or installed in an underground enclosure only where they are copper not less than 25 mm^2.

(c) *Walls and partitions* An earthing conductor that passes through a wall or partition shall not be considered as a buried earthing conductor.

5.5.6 Connections

5.5.6.1 *Conductors*

Connections in earthing conductors shall comply with Clause 3.7.

5.5.6.2 *Constructional components*

The exposed conductive parts of electrical equipment may be earthed by the connection of a protective earthing conductor to a constructional bolt, stud, screw or similar terminal arrangement forming an integral part of the electrical equipment.

COPYRIGHT

Copyright Standards New Zealand

Electrical Workers Licensing Group is licenced to temporarily download this document.
auto login of Electrical Workers Licensing Group may print this document but not more than 10% of the documents subscribed to may be held in printed form at any one time.

Such earthing shall be in accordance with the following requirements:

(a) The terminal shall be mechanically and electrically continuous with the exposed conductive part to be earthed.

(b) The protective earthing conductor shall be capable of being removed from the terminal without—

(i) reducing the effectiveness of the bolt, stud, or screw as a constructional medium in any way; or

(ii) causing any parts of the electrical equipment to lose their relative rigidity.

A stud that also serves for securing a terminal cover may be used for the connection provided that it complies with Items (c) and (d).

(c) The removal of any covers or parts that are likely to be removed to—

(i) obtain access to terminals; or

(ii) adjust the electrical equipment or parts thereof,

shall not disturb or reduce the effectiveness of the earthing connection.

(d) The bolt, stud or screw shall not be used to—

(i) fix the electrical equipment in position; or

(ii) adjust the position of the electrical equipment or any part of it.

5.6 EQUIPOTENTIAL BONDING

5.6.1 General

Equipotential bonding is intended to minimize the risks associated with the occurrence of voltage differences between exposed conductive parts of electrical equipment and extraneous conductive parts.

Such voltage differences can arise from a range of sources including the following:

(a) A fault external to the installation, either on an incoming extraneous conductor (such as a water or gas pipe, etc.) or on the supply neutral and protective earthing system.

(b) Distribution system load current in the soil passing through a swimming pool.

(c) Telecommunication system voltages on equipment adjacent to exposed conductive parts.

(d) Lightning discharges either directly within the installation or effecting the incoming extraneous conductor or the supply mains.

auto login of Electrical Workers Licensing Group is licenced to temporarily download this document.
Electrical Workers Licensing Group may print this document but not more than 10% of the documents subscribed to may be held in printed form at any one time.

Copyright Standards New Zealand

5.6.2 Arrangement

5.6.2.1 *General*

Equipotential bonding arrangements shall be provided in accordance with Clauses 5.6.2.2 to 5.6.2.6 to avoid any potential differences that may occur between electrical equipment connected to the electrical installation earthing system and any conductive piping (including taps etc.) that may independently be in contact with the mass of earth (see Figures 5.7 and 5.8 for arrangement details).

Additional equipotential bonding requirements apply for:

(a) Patient areas of hospitals, medical and dental practices and dialyzing locations, in accordance with AS/NZS 3003.

(b) Explosive atmospheres, in accordance with Clause 7.7.

(c) Telecommunications installations, in accordance with AS/NZS 3015.

(d) Film, video and television sites, in accordance with AS/NZS 4249.

(e) Photovoltaic arrays, in accordance with AS/NZS 5033.

* (f) Grid connected inverters, in accordance with AS/NZS 4777.1.

(g) Generating systems, in accordance with Clause 7.3.

(h) Separated circuits, in accordance with Clause 7.4.

5.6.2.2 *Conductive water piping*

Conductive water piping that is both—

(a) installed and accessible within the building containing the electrical installation; and

(b) continuously conductive from inside the building to a point of contact with the ground,

shall be bonded to the earthing system of the electrical installation.

Any equipotential bonding of conductive water piping shall be effected by means of an equipotential bonding conductor connected to the main earthing conductor or earth terminal or bar.

The connection of the bonding conductor to the conductive water piping shall be as close as practicable to the entry of the conductive water piping to the building.

NOTES:

1 The main earthing conductor may be continued beyond the earth electrode connecting device to form the equipotential bonding conductor to the conductive water piping. A separate connection to the earth electrode does not constitute a connection to the main earthing conductor and does not comply with this Clause.

2 Item (b) above includes any conductive path through an item of equipment, e.g. a water heater.

COPYRIGHT

Copyright Standards New Zealand

auto login of Electrical Workers Licensing Group is licenced to temporarily download this document.
Electrical Workers Licensing Group may print this document but not more than 10% of the documents subscribed to may be held in printed form at any one time.

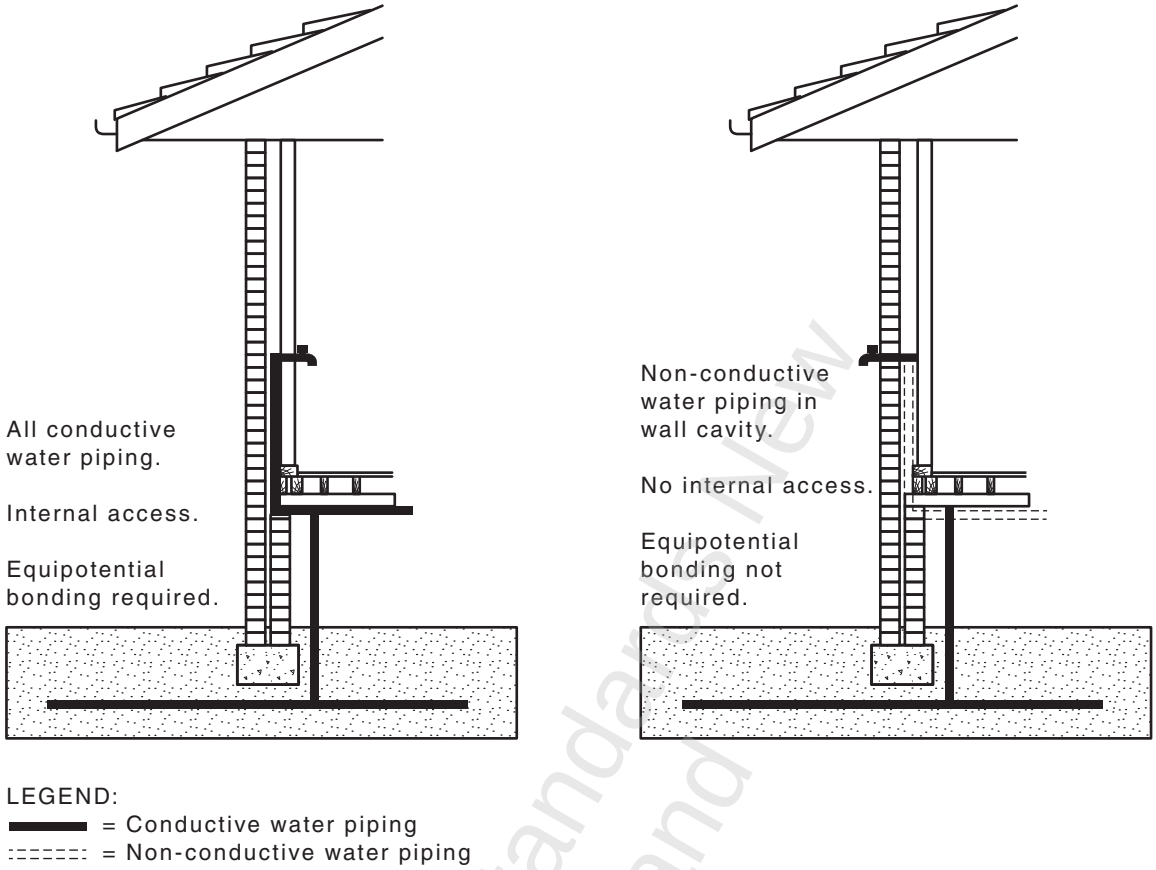

FIGURE 5.7 EXAMPLES OF EQUIPOTENTIAL BONDING OF CONDUCTIVE WATER PIPING

Copyright Standards New Zealand

auto login of Electrical Workers Licensing Group is licenced to temporarily download this document.
Electrical Workers Licensing Group may print this document but not more than 10% of the documents subscribed to may be held in printed form at any one time.

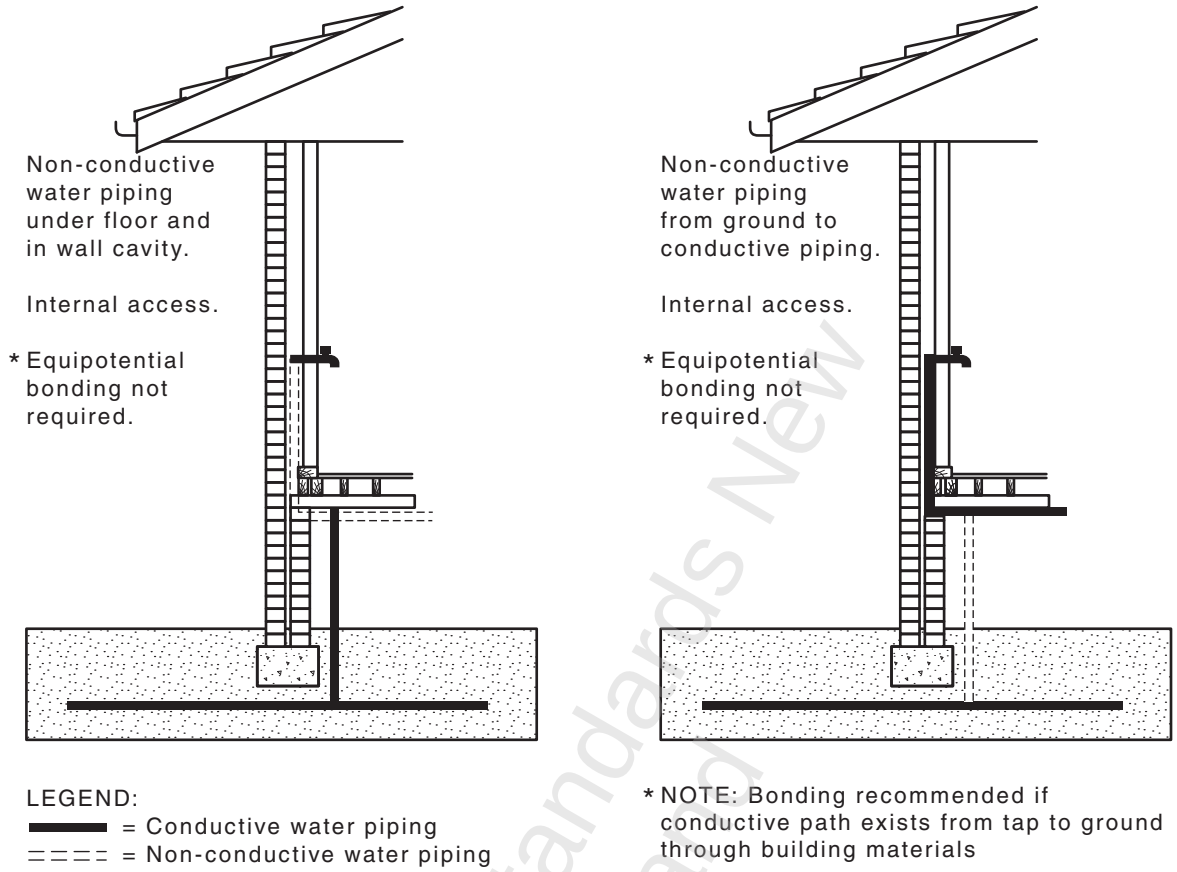

FIGURE 5.8 EXAMPLES OF EQUIPOTENTIAL BONDING OF CONDUCTIVE WATER PIPING (WITH EXCEPTION)

5.6.2.3 *Other conductive piping systems*

Conductive piping systems associated with fire sprinklers, gas, water or flammable liquid that are unavoidably in contact with the exposed conductive parts of wiring enclosures, cable components or other electrical equipment shall be connected to such equipment by means of an equipotential bonding conductor.

Exception: Bonding need not be provided where the piping system is effectively earthed by connection to an associated item of electrical equipment, e.g. pipes connected to electric hot water systems.

5.6.2.4 *Conductive cable sheaths and conductive wiring enclosures*

The conductive sheath, armour or conductive wiring enclosure of conductors operating at above extra-low voltage shall comply with one of the following:

(a) The conductive sheath, armour or conductive wiring enclosure of conductors shall be bonded to any conductive pipes containing flammable agents, such as gas or oil, with which they are in contact. The bonding shall be arranged to prevent appreciable voltage differences at points of contact.

COPYRIGHT

Copyright Standards New Zealand

auto login of Electrical Workers Licensing Group is licenced to temporarily download this document.
Electrical Workers Licensing Group may print this document but not more than 10% of the documents subscribed to may be held in printed form at any one time.

or

(b) Where it is impracticable to achieve the bonding specified in Item (a), the conductive cable sheath, armour or conductive wiring enclosures shall be separated from any non-earthed conductive pipes containing flammable agents. This separation shall overlap the points of crossing by 25 mm in all directions and be—

(i) a rigid spacing of 25 mm in air; or

(ii) a 6 mm thickness of durable insulating material.

5.6.2.5 *Showers and bathrooms*

Any conductive reinforcing within a concrete floor or wall of a room containing a shower or bath shall be bonded to the earthing system of the electrical installation.

An equipotential bonding conductor, in accordance with Clause 5.6.3, shall be connected between the reinforcing material and any part of the earthing system.

* For a combined outbuilding, each structure within that outbuilding that contains a shower or bathroom shall contain its own individual bonding connection to the conductive reinforcing within that structure.

* Providing the reinforcement is electrically continuous across the whole of the combined outbuilding (refer to Note 3), one bonding conductor connecting the reinforcement to the earth bar or link of the switchboard that supplies all of the combined outbuilding is satisfactory.

NOTES:

1 This requirement is intended to avoid any potential differences that may occur between conductive material connected to, or in contact with, the electrical installation earthing system or earthed electrical appliances and the concrete floor or wall.

2 A conductive grille or reinforcement mesh laid in the floor and connected to the equipotential bonding conductor may also be used.

3 Conductive tie-wires used during construction of reinforced concrete structures are considered to be an adequate electrical bond between the conductive reinforcing components. Provided that the reinforcement is satisfactorily electrically connected together, one point of connection of the bonding conductor to the reinforcement is sufficient.

4 In existing electrical installations, the bonding requirement of this Clause for concrete floors and walls containing conductive reinforcing need not apply, but should be adopted wherever practicable.

auto login of Electrical Workers Licensing Group is licenced to temporarily download this document.
Electrical Workers Licensing Group may print this document but not more than 10% of the documents subscribed to may be held in printed form at any one time.

Copyright Standards New Zealand

5.6.2.6 *Swimming and spa pools*

* **5.6.2.6.1** *Bonding arrangement*

An equipotential bonding conductor, in accordance with Clause 5.6.3, shall be connected between—

(a) the conductive pool structure and the pool equipotential bonding conductor connection point specified in Clauses 5.6.2.6.2 and 5.6.2.6.3;

(b) the items of electrical equipment specified in Clause 5.6.2.6.4;

(c) the conductive fixtures and fittings specified in Clause 5.6.2.6.5; and

(d) the earthing conductors associated with each circuit supplying the pool or spa, or the earthing bar at the switchboard at which the circuits originate.

The resistance of an equipotential bonding conductor connected between the items listed (a) to (d) shall not exceed 0.5 Ω.

* A bonding arrangement for pools and spas is provided in Figure 5.9.

5.6.2.6.2 *Conductive pool structures*

Where the pool structure is conductive, all extraneous conductive parts, including the reinforcing metal of the pool shell or deck, shall be connected to a pool equipotential bonding conductor connection point complying with Clause 5.6.2.6.3.

The connection point shall also be bonded to the earthing conductors associated with each circuit supplying the pool or spa, or the earthing bar at the switchboard at which the circuits originate.

* Where the pool structure is conductive, the connection point shall be installed and bonded to the installation earthing system regardless of other requirements specified in Clauses 5.6.2.6.4 and 5.6.2.6.5.

Exception: This requirement need not apply where the reinforcing metal of the pool shell or deck is electrically continuous (0.5 Ω) to the reinforcing metal within the concrete floor of the electrical installation, and that reinforcing metal has been bonded to the earthing system of the electrical installation as required in Clause 5.6.2.5.

NOTES:

1 Connections to the conductive reinforcement of the pool will generally be subject to the effects of water during the construction phase and to subsequent dampness.

2 Conductive tie-wires used during construction of reinforced concrete pools are considered to be an adequate electrical bond between the conductive reinforcing components. Provided that the reinforcement is satisfactorily electrically connected together, one point of connection of the bonding conductor to the reinforcement is sufficient.

Copyright Standards New Zealand

auto login of Electrical Workers Licensing Group is licenced to temporarily download this document.
Electrical Workers Licensing Group may print this document but not more than 10% of the documents subscribed to may be held in printed form at any one time.

auto login of Electrical Workers Licensing Group is licenced to temporarily download this document.
Electrical Workers Licensing Group may print this document but not more than 10% of the documents subscribed to may be held in printed form at any one time.

* **5.6.2.6.3** *Pool equipotential bonding conductor connection point*

An equipotential bonding conductor connection point, as required by Clause 5.6.2.6.2, may be used as a connection point for the bonding arrangements required by Clauses 5.6.2.6.4 and 5.6.2.6.5.

The connection point shall be—

(a) located in a position that will be accessible with space for connections to be made after pool construction (e.g. located adjacent to the pool equipment);

(b) identified by marking of its location on the switchboard at which the circuits supplying the pool or spa originate, or other permanent location;

(c) designed and constructed in accordance with Clause 3.7;

(d) protected against mechanical damage in accordance with Clause 5.5.5.2; and

(e) protected against corrosion in accordance with Clause 5.5.5.3.

5.6.2.6.4 *Electrical equipment*

The following items associated with electrical equipment shall be equipotentially bonded:

(a) The exposed conductive parts of any electrical equipment in the classified pool zones.

(b) Any exposed conductive parts of electrical equipment in contact with the pool water, including water in the circulation or filtration system, e.g. filtration pumps and heating systems.

NOTES:

1 Where electrical appliances and luminaires are supplied as a separated circuit in accordance with Clause 7.4, all conductive parts of such electrical equipment are deemed to be separated from live parts by double insulation.

2 Underwater luminaire bezels should be made of plastics and any associated fixing screws be insulated or of insulating material.

* **5.6.2.6.5** *Conductive fixtures and fittings*

Where any items specified in Clauses 5.6.2.6.2 or 5.6.2.6.4 are required to be equipotentially bonded, the bonding shall be extended to any fixed conductive material (such as pool ladders, diving boards, conductive fences, pipework and reinforcing metal in a concrete slab) that is installed within arm's reach of the pool edge, and that is in contact with the general mass of earth either directly or indirectly.

NOTES:

1 The general mass of earth itself may not provide a low enough impedance to operate a protective device or be suitable as an electrical bond.

2 Refer to Clause 1.4.16 and Figure 1.1 for the zone of arm's reach and Clause 1.4.60 for the definition of equipotential bonding.

COPYRIGHT

Exception:

1 *Where any fixed conductive material (such as pool ladders, diving boards, etc.) is installed within arm's reach of the pool edge and is electrically continuous (0.5 Ω) to the reinforcing metal of a concrete slab into which it is installed, and where that reinforcing metal is electrically continuous with the reinforcing metal of the pool shell or deck, then no additional bonding is required.*

2 *This requirement need not apply to fixed conductive parts and fittings that are not part of electrical equipment and have no individual accessible part greater than 100 mm in any dimension.*

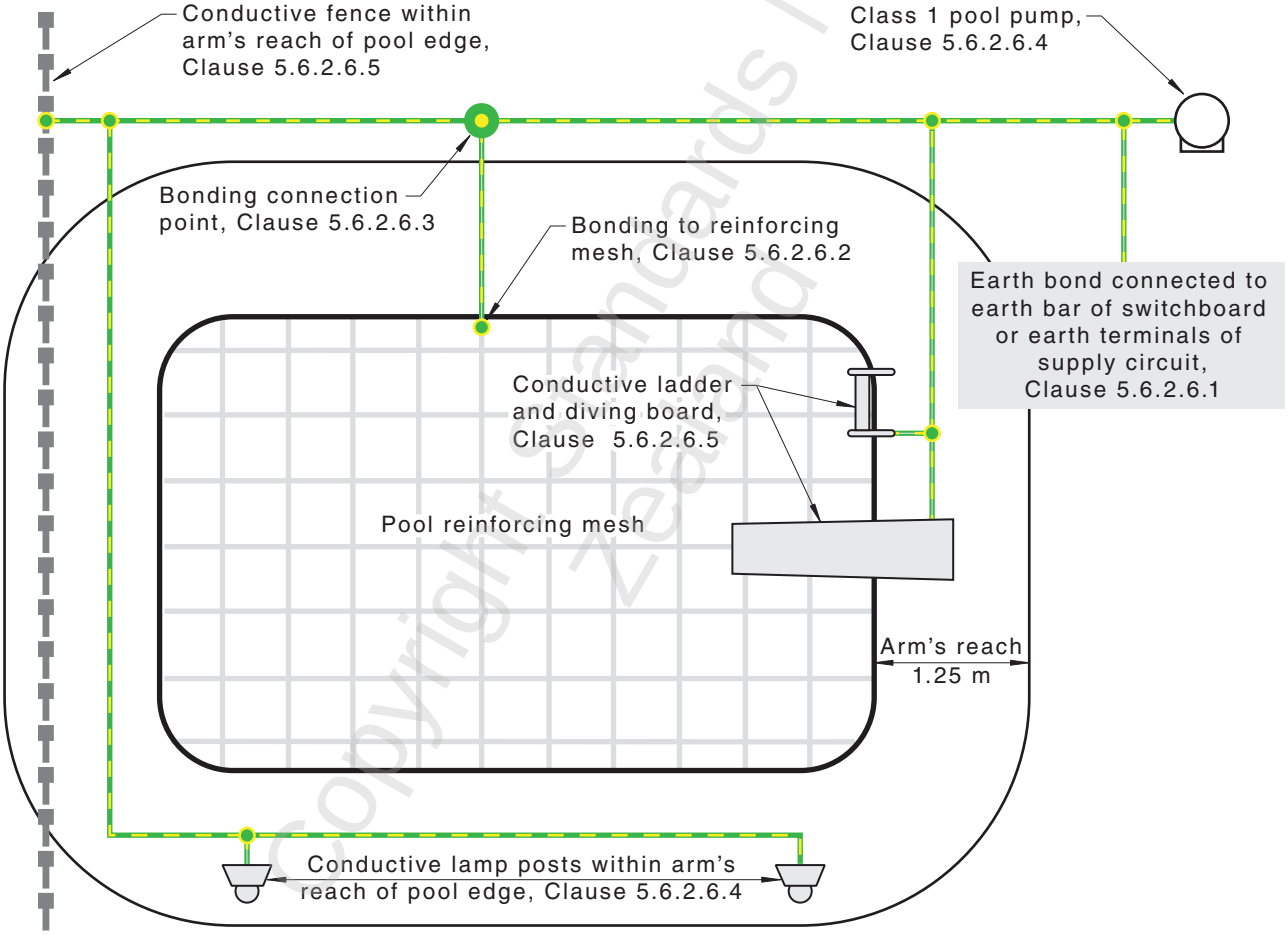

*

FIGURE 5.9 EXAMPLE OF BONDING ARRANGEMENT FOR POOLS AND SPAS

Copyright Standards New Zealand

auto login of Electrical Workers Licensing Group is licenced to temporarily download this document.
Electrical Workers Licensing Group may print this document but not more than 10% of the documents subscribed to may be held in printed form at any one time.

auto login of Electrical Workers Licensing Group is licenced to temporarily download this document.
Electrical Workers Licensing Group may print this document but not more than 10% of the documents subscribed to may be held in printed form at any one time.

5.6.2.7 *Telephone and telecommunication earthing systems*

The telephone and telecommunication earthing system may be connected in common with the electrical installation earthing system in order to minimize the risk associated with different voltages appearing on the two systems.

If the telephone and telecommunication earthing system is directly connected to the electrical installation earthing system, it shall be connected either—

(a) to the electrical installation earthing system at an enclosed terminal provided for the purpose; or

(b) directly to the earth electrode by an independent connecting device, and shall be clearly identified.

If an enclosed terminal is used the following conditions shall apply:

(i) The terminal shall be connected by means of a protective earthing conductor to the main earthing conductor of the electrical installation earthing system in accordance with the connection methods specified in Clause 5.5.2.

(ii) The terminal shall not be installed within a switchboard.

(iii) The terminal shall be installed in a convenient and readily accessible position.

(iv) The minimum cross-sectional area of the protective earthing conductor used for the connection shall be 6 mm^2.

NOTES:

1 Requirements for the installation of telecommunications earthing systems in Australia are contained in AS/CA S009, *Installation requirements for customer cabling (Wiring Rules)*. **A**

2 Recommendations for New Zealand are contained in the TCF Premises *Wiring Code of Practice*. **NZ**

3 Refer to Appendix F for further detail of the bonding arrangement.

5.6.3 Bonding conductors

5.6.3.1 *General*

The selection and installation of equipotential bonding conductors shall be in accordance with the protective earthing conductor requirements in Clause 5.5.

Exception: The size of an equipotential bonding conductor shall be determined in accordance with Clause 5.6.3.2.

5.6.3.2 *Size*

The size of equipotential bonding conductors shall be determined from the requirements of this Clause 5.6.3, as appropriate to the particular bonding conductor application.

COPYRIGHT

The equipotential bonding conductor need not be larger than the sizes specified below, provided the installation conditions are such that mechanical damage is unlikely to occur, and, in accordance with Clause 5.7.5, a larger size is not required to reduce the earth fault-loop impedance.

The size of equipotential bonding conductors shall be in accordance with the following:

(a) *Conductive piping, cable sheaths and wiring enclosures* The equipotential bonding conductor required in accordance with Clauses 5.6.2.2 to 5.6.2.4 shall have a cross-sectional area not less than 4 mm^2.

(b) *Showers, bathrooms, swimming and spa pools* The equipotential bonding conductors required to connect conductive parts of a shower, bathroom, swimming or spa pool in accordance with Clauses 5.6.2.5 and 5.6.2.6 shall have a cross-sectional area not less than 4 mm^2.

Exception: The cross-sectional area of the equipotential bonding conductor for a swimming or spa pool may be determined as for an earthing conductor, in accordance with Clause 5.3.3.4(c), where the equipotential bonding conductor is incorporated in a multi-core flexible cord supplying electrical equipment that is required to be removed for maintenance.

(c) *Telephone and telecommunication earthing systems* The equipotential bonding conductors required to connect a telephone and telecommunication earthing system in accordance with Clause 5.6.2.7 shall have a cross-sectional area not less than 6 mm^2.

NOTE: Refer to the AS/NZS 60079 series for minimum sizes of equipotential bonding conductors in explosive atmospheres.

5.7 EARTH FAULT-LOOP IMPEDANCE

5.7.1 General

Effective fault protection by means of automatic disconnection of supply is based on disconnecting supply from the section of the installation concerned in such a way as to limit the time/touch voltage relationship to safe values in the event of an insulation fault.

Automatic disconnection is dependent on the characteristics of the circuit protective device and the impedance of the earthing system.

Where the touch potential exceeds 50 V a.c or 120 V ripple-free d.c., the circuit-protective device shall cause disconnection of supply within the required time.

auto login of Electrical Workers Licensing Group is licenced to temporarily download this document.
Electrical Workers Licensing Group may print this document but not more than 10% of the documents subscribed to may be held in printed form at any one time.

Copyright Standards New Zealand

The impedance of the earthing system shall be limited to that which will generate sufficient current in the protective device to cause operation of that device within the required time, taking into consideration the characteristics of the circuit protection device and the impedance of the active conductor.

NOTE: Appendix B provides a detailed analysis of earth fault-loop impedance as an element of the method of protection by automatic disconnection of supply.

5.7.2 Disconnection times

The maximum disconnection time for a 230 V supply voltage shall not exceed the following:

(a) 0.4 s for final subcircuits that supply—

  (i) socket-outlets having rated currents not exceeding 63 A; or

  (ii) hand-held Class I equipment; or

  (iii) portable equipment intended for manual movement during use.

(b) 5 s for other circuits where it can be shown that people are not exposed to touch voltages that exceed safe values. Refer to Appendix B, Paragraph B4.

NOTES:

1 Maximum disconnection times will vary for other operating voltages or installation conditions, such as wet locations, etc.

2 The fault current has to be of sufficient magnitude to cause automatic disconnection within the required times.

3 See Clauses 1.5 and 2.4.2.

5.7.3 Earth fault-loop

The path for the circulation of fault current, the earth fault-loop, in a MEN system comprises the following parts:

(a) The active conductor as far as the point of the fault, including supply mains, service line, consumer mains, submains (if any) and the final subcircuit.

(b) The protective earthing conductor (PE), including the main earthing terminal/connection or bar and MEN connection.

(c) The neutral-return path, consisting of the neutral conductor (N) between the main neutral terminal or bar and the neutral point at the transformer, including supply mains, service line and consumer mains.

(d) The path through the neutral point of the transformer and the transformer winding.

NOTE: See Appendix B, Figure B5.

auto login of Electrical Workers Licensing Group is licenced to temporarily download this document.
Electrical Workers Licensing Group may print this document but not more than 10% of the documents subscribed to may be held in printed form at any one time.

Copyright Standards New Zealand

5.7.4 Impedance

The earthing system impedance and characteristics of protective devices shall be such that, if a fault of negligible impedance occurs anywhere in the electrical installation between an active conductor and an exposed conductive part or protective earthing conductor, automatic disconnection of the supply will occur within the specified time.

The following condition fulfils this requirement:

$$Z_s \times I_a \leq U_o \quad \ldots 5.2$$

where

Z_s = the impedance of the earth fault-loop comprising the source, the active conductor up to the point of the fault and the return conductor between the point of the fault and the source

I_a = the current required to cause the automatic operation of the disconnecting protective device within the required disconnection time

U_o = the nominal a.c. r.m.s. voltage to earth (230 V)

NOTES:

1 Additional earthing requirements apply in patient areas of hospitals, medical and dental practices and dialyzing locations. Refer to AS/NZS 3003.

2 The return path will comprise both protective earthing and neutral conductors.

3 Appendix B illustrates a method of complying with the requirements of this Clause based on the determination of the maximum length of a circuit in relation to the size of circuit conductors and type of protective device.

4 Guidance on the measurement of the earth fault-loop impedance of each circuit is given in Appendix B.

Table 8.1 contains calculated examples of the maximum values of earth fault-loop impedance, Z_s, using approximate mean tripping currents for a limited range of miniature circuit-breakers (MCBs) (taken from AS/NZS 60898 and manufacturers' time/current characteristic curves) and fuses (taken from IEC 60269 series) and the appropriate disconnection time.

5.7.5 Supplementary equipotential bonding

In the event that a reduction in earth fault-loop impedance is required in order to ensure that the disconnection time of the protective device is sufficient to satisfy the requirements of Clause 5.7.2, bonding of extraneous conductive parts and their connection to the earthing system may be used.

NOTE: Other measures, such as selection of an alternative protective device, e.g. an RCD that has a lower automatic operating current, I_a, within the required disconnection time, may also be used to satisfy the requirements of Clause 5.7.2.

Electrical Workers Licensing Group may print this document but not more than 10% of the documents subscribed to may be held in printed form at any one time.
auto login of Electrical Workers Licensing Group is licenced to temporarily download this document.
Copyright Standards New Zealand

5.8 OTHER EARTHING ARRANGEMENTS

Where it is intended to provide fault protection by the method of electrical separation, protective earthing conductors and equipotential bonding conductors shall be arranged in accordance with the requirements of Clause 7.4.

The earthing arrangements of the following systems should be independent systems; however, if they are connected to the electrical installation earthing system they should not reduce the integrity of the electrical installation protective earthing system.

Examples:

The following are examples of independent systems:

(a) Lightning protection.

(b) Static electricity protection.

(c) Radio frequency interference (RFI)-screened installations.

(d) Information technology installations.

(e) Explosion protection systems.

(f) Cathodic protection systems.

NOTE: Requirements for the installation of protective earthing and bonding conductors for the above systems may be contained in other Standards.

Copyright Standards New Zealand

auto login of Electrical Workers Licensing Group is licenced to temporarily download this document.
Electrical Workers Licensing Group may print this document but not more than 10% of the documents subscribed to may be held in printed form at any one time.

SECTION 6 DAMP SITUATIONS

6.1 GENERAL

6.1.1 Application

This Section specifies the minimum requirements for the selection and installation of electrical equipment in locations subject to the effects of water or high humidity (damp situations), that shall be achieved to satisfy Part 1 of this Standard.

6.1.2 Selection and installation

In addition to the requirements of Sections 2 to 5 of this Standard, electrical equipment used in damp situations shall be selected and installed to perform the following functions:

(a) Provide enhanced protection against electric shock in locations where the presence of water or high humidity present an increased risk.

NOTE: This increased risk of electric shock is generated by a reduction in body resistance and the likelihood of contact of the body with earth potential.

(b) Provide adequate protection against damage that might reasonably be expected from the presence of water or high humidity.

NOTE: Appendix G describes the IP system of classification of degrees of protection for electrical equipment.

The particular requirements for specific damp situations are additional to, replace, or modify the general requirements of the other Sections of this Standard. Where this Section does not specify a requirement, the relevant requirements of other Sections of this Standard apply.

This Section applies to the following damp situations:

(i) Baths, showers and other fixed water containers.

(ii) Swimming pools, paddling pools and spa pools or tubs.

(iii) Fountains and water features.

(iv) Saunas.

(v) Refrigeration rooms.

(vi) Sanitization and general hosing-down operations.

auto login of Electrical Workers Licensing Group is licenced to temporarily download this document.
Electrical Workers Licensing Group may print this document but not more than 10% of the documents subscribed to may be held in printed form at any one time.

Copyright Standards New Zealand

6.2 BATHS, SHOWERS AND OTHER FIXED WATER CONTAINERS

6.2.1 Scope

The particular requirements of this Clause (Clause 6.2) apply to electrical installations in locations containing a bath, shower or other fixed water containers and their surrounding zones, where the risk of electric shock is increased by a reduction in body resistance and the likelihood of the body making contact with the water and with conductive structure(s) in contact with the general mass of earth.

* Other fixed water containers are those designed to contain water in normal use and do not include fortuitous containers or areas not intended to contain water for normal operations or water containers into which persons do not normally put a part or all of their body.

For the purposes of this Clause, a full chemical safety washdown facility, such as a deluge shower, in which a person can stand, shall be treated as a shower under Clause 6.2.2.1. In addition, a self-contained eyewash facility with a fixed or flexible hose shall be treated as a fixed water container under Clause 6.2.2.2.

The requirements of this Clause are based on the classification of zones surrounding the water container.

Barriers, such as screens, doors, curtains and fixed partitions that provide effective protection against spraying water may be used to limit the extent of a classified zone.

Ceilings, walls with or without windows, doors and floors that limit the extent of rooms containing a bath, shower or other water container also limit the associated zones.

* Due to the nature of these locations, certain methods of protection against electric shock are not permitted. Refer to Clause 6.2.3.

NOTES:

1 For locations containing baths for medical treatment, special requirements may be necessary.

2 Electrical equipment installed behind a fixed panel that provides a degree of protection not less than IPX4 and to which access may only be gained by the use of a tool would not be considered to be in a classified zone.

3 Electrical equipment recessed into a ceiling such that all live parts are above the lower surface of the ceiling is considered to be outside any zone immediately below the ceiling.

6.2.2 Classification of zones

6.2.2.1 *Baths and showers*

Four zones (Zones 0, 1, 2 and 3) are classified for baths and showers:

(a) Zone 0 shall be the area of the interior of a bath or a shower base.

NOTE: A shower base may be defined by either a raised hob or a depression in the floor.

COPYRIGHT

auto login of Electrical Workers Licensing Group is licenced to temporarily download this document.
Electrical Workers Licensing Group may print this document but not more than 10% of the documents subscribed to may be held in printed form at any one time.

Copyright Standards New Zealand

(b) Zone 1 for a bath shall be the area limited by the following:

(i) Zone 0.

(ii) The vertical projection of the internal rim of the bath above Zone 0.

(iii) When the bath contains a shower, by the vertical plane 1.2 m radius from the shower fixed plumbing connection.

(iv) In Australia, by the floor and a horizontal plane 2.5 m above the floor. **A**

(v) In New Zealand, by the floor and a horizontal plane 2.25 m above the floor. **NZ**

(vi) The height of the fixed plumbing connection, if higher than the horizontal plane specified in Item (iv) or (v).

NOTE: A barrier of a height at which the shower connection is made to the fixed plumbing, or 1.8 m, whichever is the greater, may be used to reduce the 1.2 m dimension in Item (b)(iii).

(c) Zone 1 for a shower shall be the area limited by the following:

(i) Zone 0.

(ii) For a fixed plumbing connection on the wall, by the vertical plane 1.2 m radius from the fixed plumbing connection. A barrier of a height at which the shower connection is made to the fixed plumbing, or 1.8 m, whichever is the greater, may be used to reduce the 1.2 m dimension.

* (iii) For a fixed plumbing connection on the ceiling, by the vertical plane horizontally distant from the fixed plumbing connection, and as follows:

(A) In Australia, a radius of 0.6 m. **A**

Exception: A barrier with a minimum height of 1.8 m may be used to reduce the 0.6 m dimension.

(B) In New Zealand, a radius of 1.2 m. **NZ**

Exception: A barrier with a minimum height of 1.8 m may be used to reduce the 1.2 m dimension.

(iv) In Australia, by the floor and a horizontal plane 2.5 m above the floor. **A**

(v) In New Zealand, by the floor and a horizontal plane 2.25 m above the floor. **NZ**

(vi) The height of the fixed plumbing connection, if higher than the horizontal plane specified in Item (iv) or (v).

NOTE: Examples of barriers include a hinged or sliding door, or a shower curtain.

COPYRIGHT

Copyright Standards New Zealand

auto login of Electrical Workers Licensing Group is licenced to temporarily download this document.
Electrical Workers Licensing Group may print this document but not more than 10% of the documents subscribed to may be held in printed form at any one time.

(d) Zone 2 shall be the area limited by—

(i) the vertical plane limiting Zone 1 and the parallel vertical plane 0.6 m external to Zone 1; and

(ii) the floor and the horizontal plane 2.25 m above the floor.

(e) Zone 3 shall be the area limited by the following:

(i) The vertical plane limiting Zone 2 and the parallel vertical plane 2.4 m external to Zone 2.

(ii) In Australia, by the floor and a horizontal plane 2.5 m above the floor. **A**

(iii) In New Zealand, by the floor and a horizontal plane 2.25 m above the floor. **NZ**

(iv) In Australia, Zone 3 shall include the area above Zone 2 up to 2.5 m above the floor. **A**

A1 *Examples of these zones are shown in Figures 6.1 to 6.12.*

6.2.2.2 *Other fixed water containers*

Two zones (Zones 0 and 2) are classified for fixed water containers other than baths and showers:

(a) Zone 0 shall be the area of the interior of the water container.

* (b) Zone 2 for an individual water container with a capacity not exceeding 40 L, and having fixed water outlets, shall be the area limited by—

(i) the vertical plane 0.15 m from the internal rim of the water container; and

(ii) the floor and the horizontal plane 0.4 m above the water container.

A1 NOTE: Figure 6.13 shows a typical double bowl sink where the capacity of each container does not exceed 40 L.

* (c) Zone 2 for water containers having either a capacity exceeding 40 L, or a water outlet through a flexible hose, shall be the area limited by—

(i) the vertical plane 0.5 m from the internal rim of the water container; and

(ii) the floor and the horizontal plane 1.0 m above the water container.

Examples of these zones are shown in Figures 6.13 and 6.14.

NOTES:

1 There is no Zone 1 or 3 for these water containers.

2 An example of a water outlet through a flexible hose is a vegetable sprayer.

auto login of Electrical Workers Licensing Group is licenced to temporarily download this document.
Electrical Workers Licensing Group may print this document but not more than 10% of the documents subscribed to may be held in printed form at any one time.

Copyright Standards New Zealand

6.2.3 Protection against electric shock—Prohibited measures

The following measures of protection against electric shock are prohibited and shall not be used:

(a) Protection by means of obstacles, in accordance with Clause 1.5.4.5.

(b) Protection by placing out of reach, in accordance with Clause 1.5.4.6.

6.2.4 Selection and installation of electrical equipment

A2

6.2.4.1 *Degree of protection required*

Electrical equipment permitted to be installed in a classified zone shall have at least the following degree of protection:

(a) In Zone 0—IPX7.

(b) In Zones 1 and 2—IPX4.

(c) In Zone 3—no specific degree of protection.

The requirements for selection and installation of electrical equipment are provided in Table 6.1.

6.2.4.2 *Socket-outlets*

Socket-outlets shall not be installed within 0.3 m of the floor of a bathroom, laundry or other similar location where the floor is likely to become wet.

Regardless of the degree of protection provided by the equipment, the following requirements apply to the installation of socket-outlets in classified zones:

(a) *Zone 0 and Zone 1* Socket-outlets shall not be installed in Zone 0 or 1.

(b) *Zone 2* Socket-outlets installed in Zone 2 shall be—

  (i) of the automatic switching type incorporated in a shaver supply unit complying with AS/NZS 3194; or

  (ii) protected by an RCD with a fixed rated residual current not exceeding 30 mA and enclosed in a cupboard that maintains the enclosure of the socket-outlet during normal operation of the connected equipment.

(c) *Zone 3* Socket-outlets installed in Zone 3 shall be—

A1

  (i) protected by an RCD with a fixed rated residual current not exceeding 30 mA; or

  (ii) supplied individually as a separated circuit, in accordance with Clause 7.4; or

  (iii) supplied as an SELV or a PELV system, in accordance with Clause 7.5.

Electrical Workers Licensing Group is licenced to temporarily download this document.
auto login of Electrical Workers Licensing Group may print this document but not more than 10% of the documents subscribed to may be held in printed form at any one time.

Copyright Standards New Zealand

auto login of Electrical Workers Licensing Group is licenced to temporarily download this document.
Electrical Workers Licensing Group may print this document but not more than 10% of the documents subscribed to may be held in printed form at any one time.

6.2.4.3 *Switches and other accessories*

Switches and other accessories shall not be installed within 0.3 m of the floor of a bathroom, laundry or other similar location where the floor is likely to become wet.

The following requirements apply to the installation of switches and other accessories in classified zones:

(a) *Zone 0* Switches and other accessories shall not be installed in Zone 0.

(b) *Zone 1 and Zone 2* Only switches and accessories with at least the required degree of protection shall be installed in Zones 1 and 2.

6.2.4.4 *Luminaires*

The following requirements apply to the installation of luminaires in classified zones:

(a) *Zone 0* Luminaires installed in Zone 0 shall be—

A1

(i) provided with the required degree of protection; and

(ii) designed and constructed specifically for use in a bath, shower or water container; and

(iii) supplied at a nominal voltage not exceeding 12 V a.c. or 30 V ripple-free d.c.; and

(iv) supplied from a source located outside Zone 0 as an SELV or a PELV system, in accordance with Clause 7.5.

(b) *Zones 1, 2 and 3* Luminaires installed in Zones 1, 2 and 3 shall be provided with at least the required degree of protection.

Exceptions: Regardless of the degree of protection provided by the equipment, the following luminaires may be installed in Zone 2:

1 Luminaires of Class II construction (double or reinforced insulation) that require the removal of a cover to access lamps.

NOTE: A batten holder is not a Class II luminaire.

2 Luminaires supplied from a source located outside Zone 2 as an SELV or a PELV system, in accordance with Clause 7.5.

6.2.4.5 *Other electrical equipment*

The following requirements apply to the installation of appliances and other electrical equipment in classified zones:

(a) *Zone 0* Appliances and other electrical equipment installed in Zone 0 shall be—

A1

(i) designed and constructed specifically for use in a bath, shower or water container; and

(ii) provided with the required degree of protection; and

COPYRIGHT

(iii) supplied—

A1 (A) from a source located outside Zone 0; and

(B) at a nominal voltage not exceeding 12 V a.c. or 30 V ripple-free d.c.; and

(C) as an SELV or a PELV system, in accordance with Clause 7.5.

(b) *Zones 1, 2 and 3* Appliances and other electrical equipment installed in Zones 1, 2 and 3 shall be provided with at least the required degree of protection for the particular zone.

Heating cable systems intended for heating the location, and that are embedded in the floor and protected in accordance with Clause 4.10, may be installed.

6.2.4.6 *Switchboards*

A switchboard shall not be located within any classified zone.

6.2.4.7 *Electricity generation systems*

* Electricity generation systems, including engine-driven generator sets, stand-alone power systems, grid-connected inverter systems and battery systems shall not be installed within any classified zone.

TABLE 6.1

SELECTION AND INSTALLATION OF ELECTRICAL EQUIPMENT FOR BATHS, SHOWERS AND OTHER FIXED WATER CONTAINERS

Equipment	Zone 0	Zone 1	Zone 2	Zone 3
Clause 6.2.4.2—Socket-outlets	Not permitted	Not permitted	(a) A shaver outlet; or (b) RCD-protected and in a cupboard (no specific IP rating).	(a) <0.3 m not permitted (b) ≥0.3 m no IP rating but shall have— (i) RCD protection; or (ii) separated supply; or (iii) SELV or PELV supply.
Clause 6.2.4.3—Switches/ accessories	Not permitted	Same as Zone 2	<0.3 m not permitted ≥0.3 m IPX4	<0.3 m not permitted ≥0.3 m—No IP rating

(*continued*)

COPYRIGHT

auto login of Electrical Workers Licensing Group is licenced to temporarily download this document.
Electrical Workers Licensing Group may print this document but not more than 10% of the documents subscribed to may be held in printed form at any one time.

Copyright Standards New Zealand

TABLE 6.1 (*continued*)

Equipment	Zone 0	Zone 1	Zone 2	Zone 3
A2 Clause 6.2.4.4—Luminaires	IPX7 and specifically for use and SELV or PELV supply	IPX4	IPX4; or Class II construction (double or reinforced insulation); or SELV or PELV; or recessed into ceiling	No IP rating
A2 Clause 6.2.4.5—Other electrical equipment	IPX7 and specifically for use and SELV or PELV supply	IPX4	IPX4; or recessed into ceiling	No IP rating
Clause 6.2.4.6—Switchboards	Not permitted	Not permitted	Not permitted	Not permitted
* Clause 6.2.4.7—Electricity generation systems	Not permitted	Not permitted	Not permitted	Not permitted

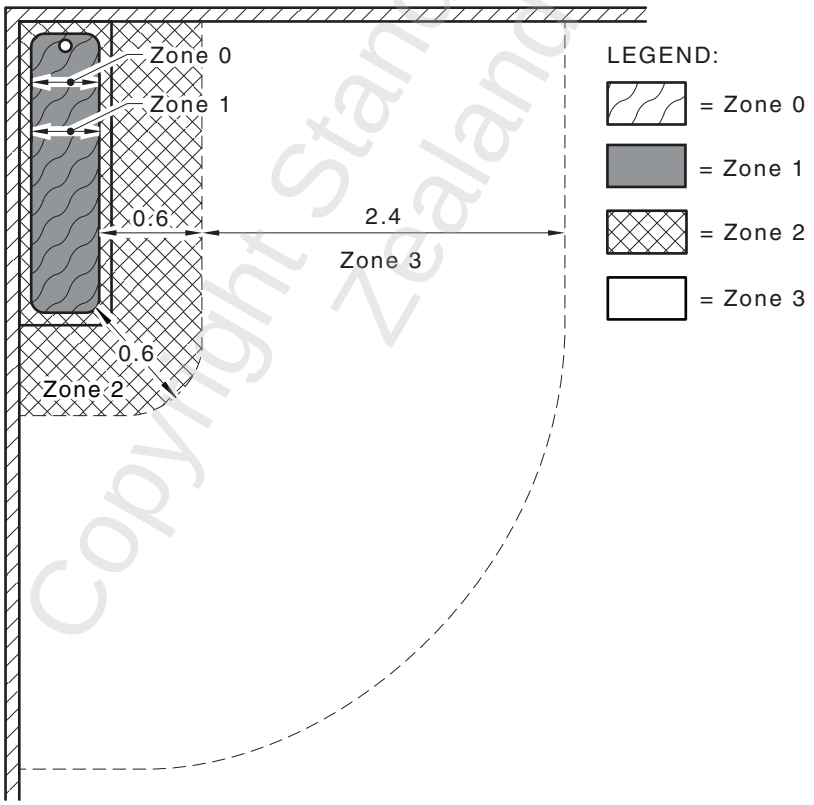

DIMENSIONS IN METRES

FIGURE 6.1 ZONE DIMENSIONS (PLAN)—
BATH WITHOUT SHOWER OR FIXED BARRIER

COPYRIGHT

Copyright Standards New Zealand

auto login of Electrical Workers Licensing Group is licenced to temporarily download this document.
Electrical Workers Licensing Group may print this document but not more than 10% of the documents subscribed to may be held in printed form at any one time.

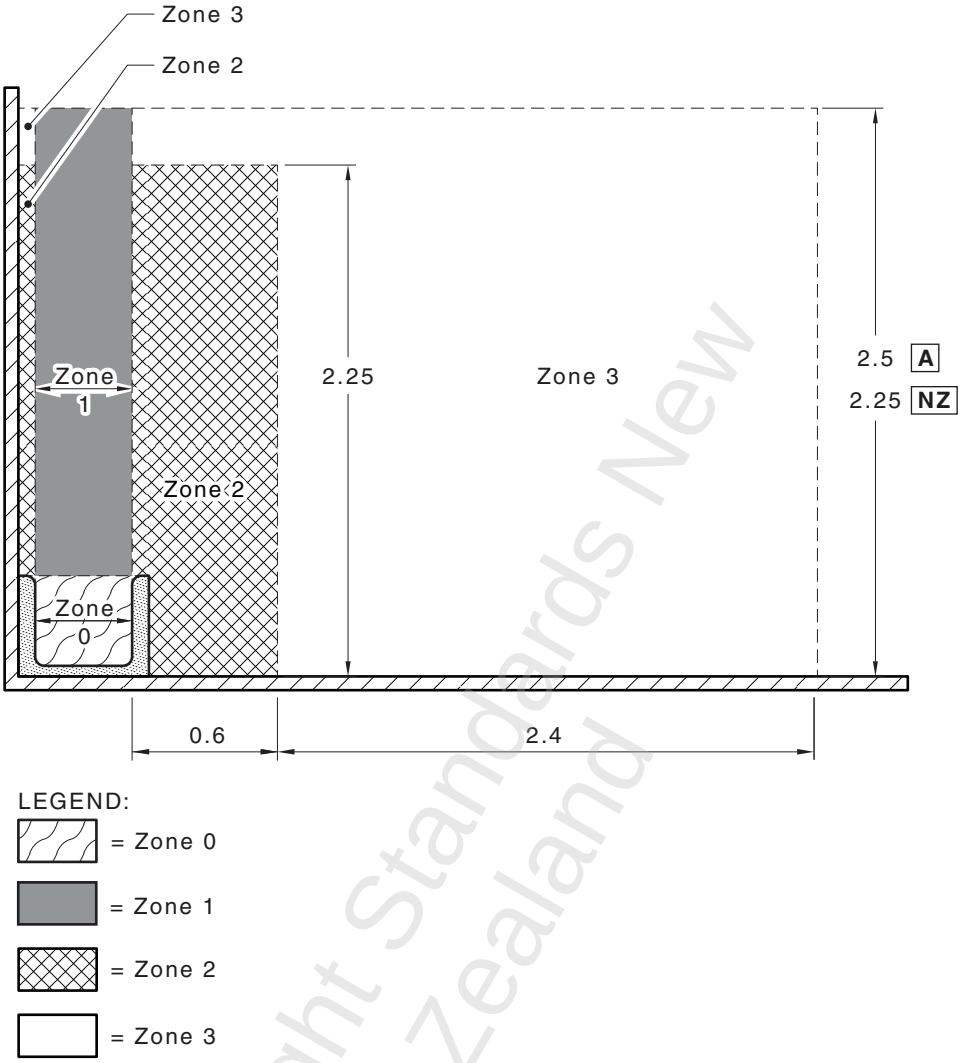

DIMENSIONS IN METRES

FIGURE 6.2 ZONE DIMENSIONS (ELEVATION)—
BATH WITHOUT SHOWER OR FIXED BARRIER

Copyright Standards New Zealand

auto login of Electrical Workers Licensing Group is licenced to temporarily download this document.
Electrical Workers Licensing Group may print this document but not more than 10% of the documents subscribed to may be held in printed form at any one time.

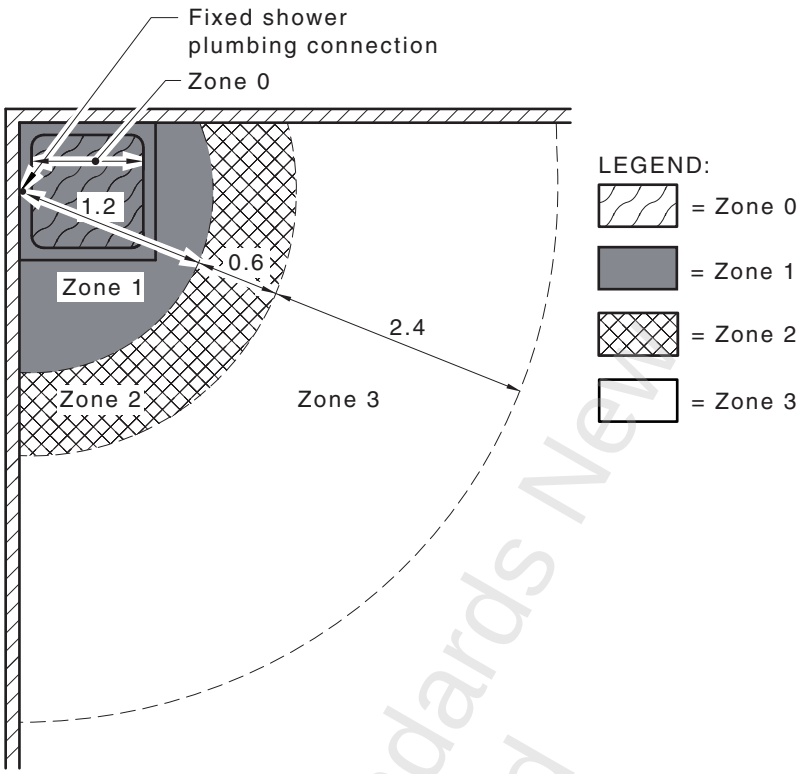

DIMENSIONS IN METRES

FIGURE 6.3 ZONE DIMENSIONS (PLAN)—SHOWER WITH FIXED PLUMBING CONNECTION ON WALL AND BASE WITHOUT BARRIERS

Copyright Standards New Zealand

auto login of Electrical Workers Licensing Group is licenced to temporarily download this document.
Electrical Workers Licensing Group may print this document but not more than 10% of the documents subscribed to may be held in printed form at any one time.

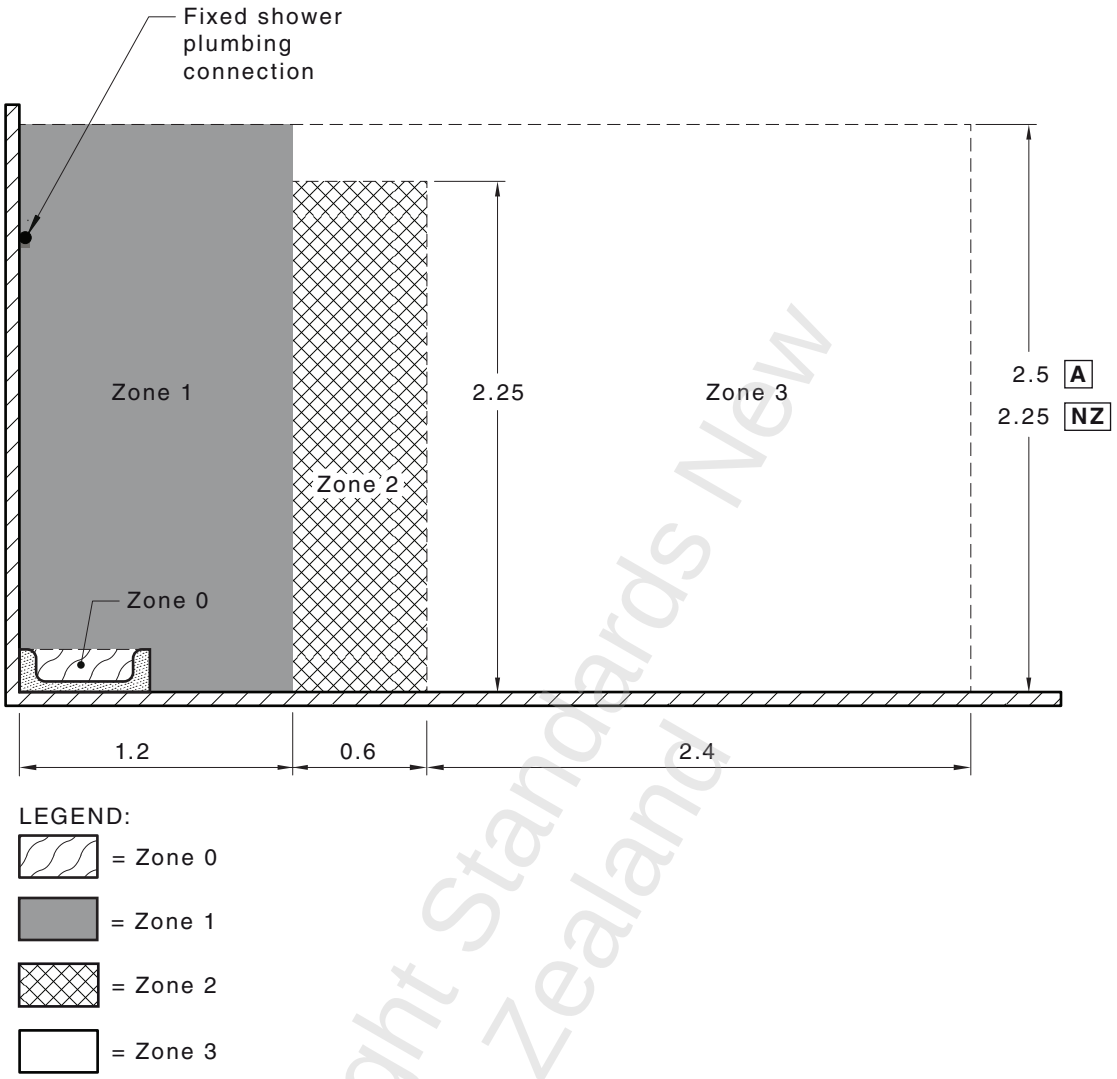

DIMENSIONS IN METRES

FIGURE 6.4 ZONE DIMENSIONS (ELEVATION)—SHOWER WITH FIXED PLUMBING CONNECTION ON WALL AND BASE WITHOUT BARRIERS

Copyright Standards New Zealand

auto login of Electrical Workers Licensing Group is licenced to temporarily download this document.
Electrical Workers Licensing Group may print this document but not more than 10% of the documents subscribed to may be held in printed form at any one time.

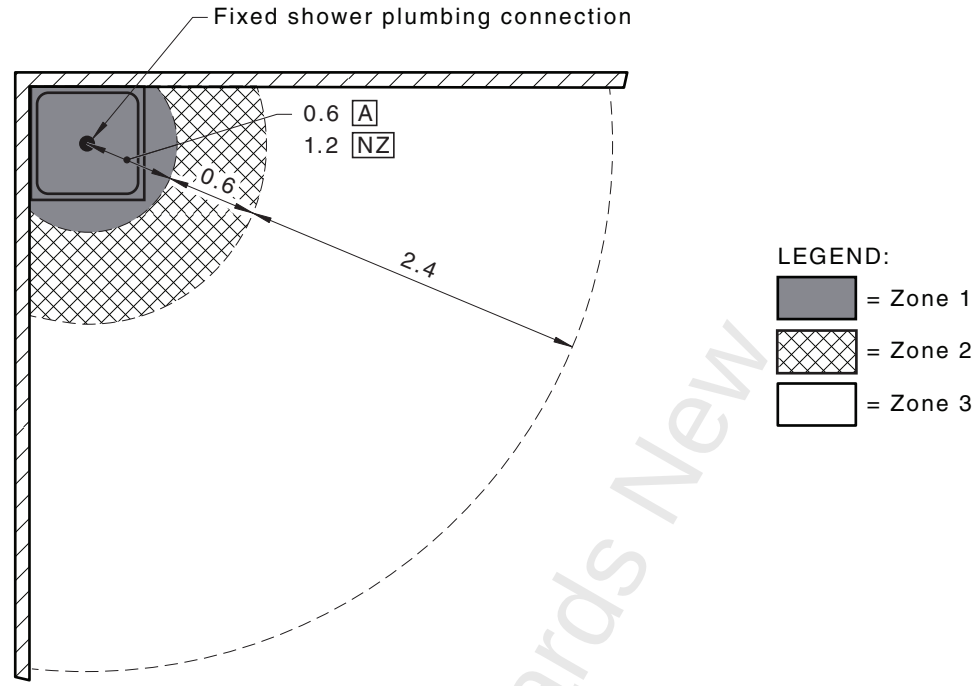

*

NOTE: Limitation of zones by barriers or enclosures apply, as they do for wall-mounted plumbing connections.

DIMENSIONS IN METRES

FIGURE 6.5 BATHS AND SHOWERS, ZONE DIMENSIONS (PLAN)—SHOWER WITH FIXED PLUMBING CONNECTION ON CEILING AND WITHOUT BARRIERS

Copyright Standards New Zealand

auto login of Electrical Workers Licensing Group is licenced to temporarily download this document.
Electrical Workers Licensing Group may print this document but not more than 10% of the documents subscribed to may be held in printed form at any one time.

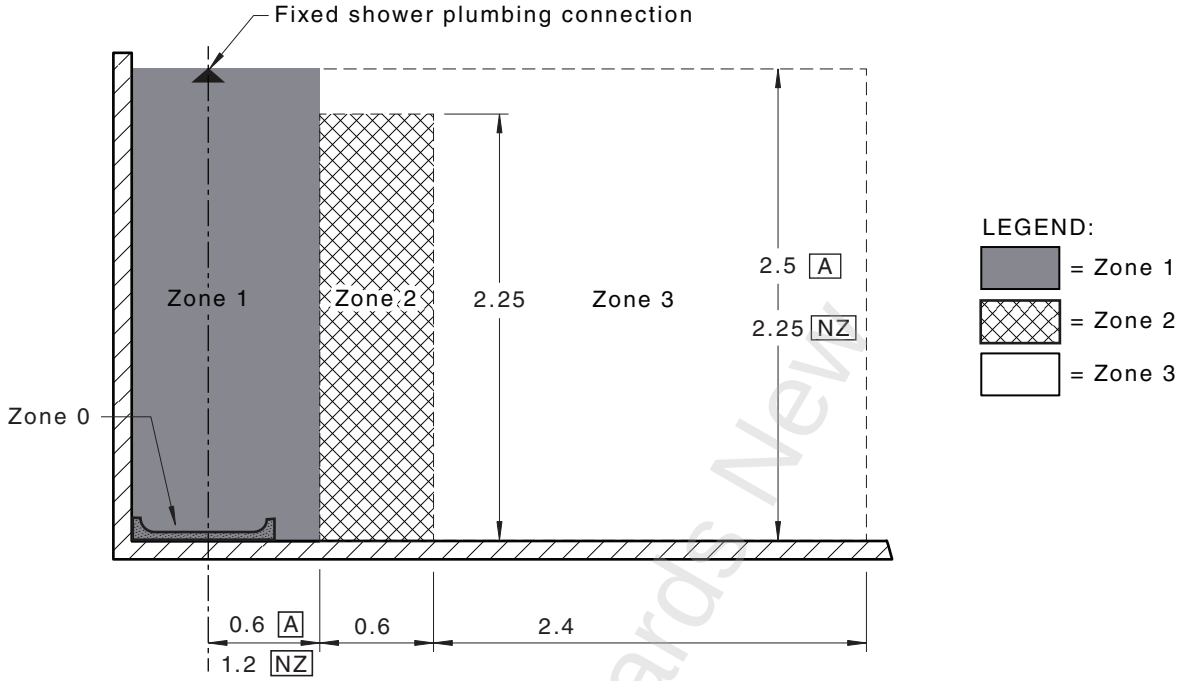

DIMENSIONS IN METRES

FIGURE 6.6 BATHS AND SHOWERS, ZONE DIMENSIONS (ELEVATION)—
SHOWER WITH FIXED PLUMBING CONNECTION ON CEILING
AND WITHOUT BARRIERS

Copyright Standards New Zealand

auto login of Electrical Workers Licensing Group is licenced to temporarily download this document.
Electrical Workers Licensing Group may print this document but not more than 10% of the documents subscribed to may be held in printed form at any one time.

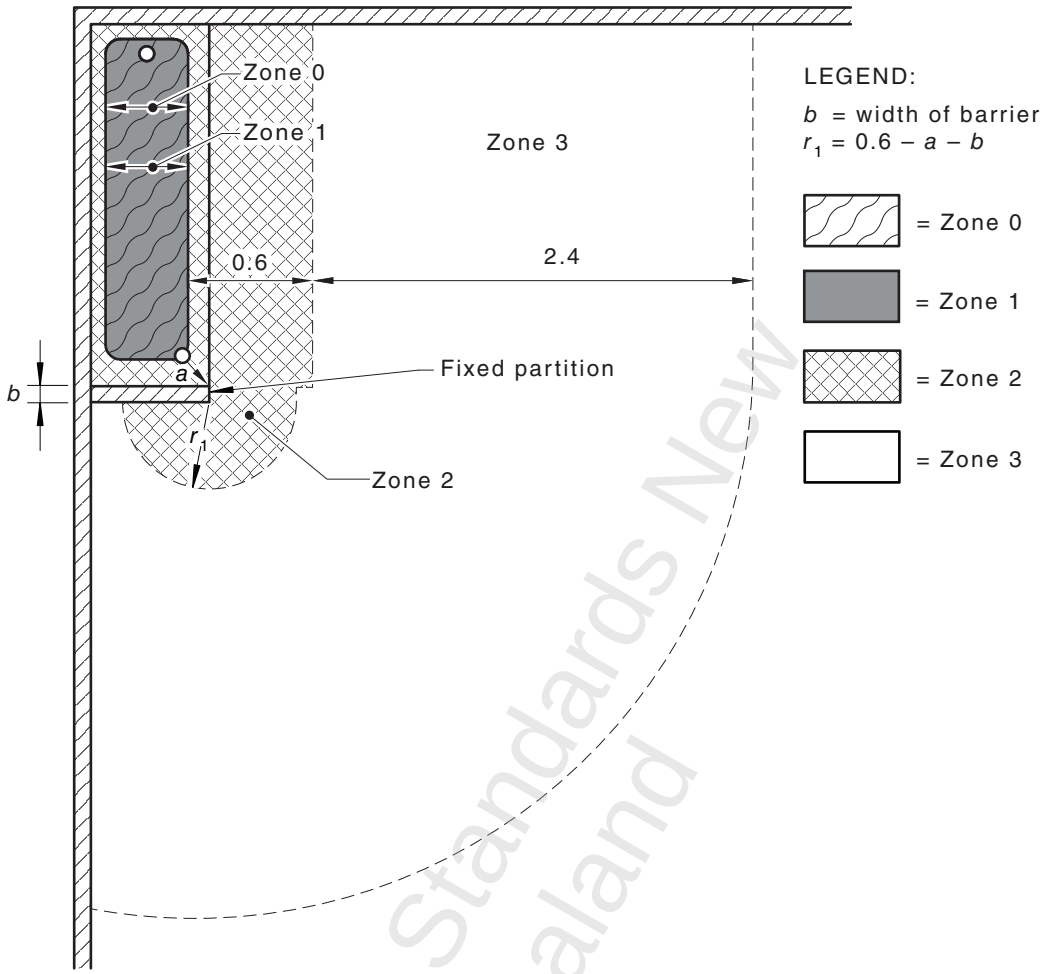

DIMENSIONS IN METRES

FIGURE 6.7 ZONE DIMENSIONS (PLAN)—
BATH WITHOUT SHOWER WITH FIXED BARRIER

Copyright Standards New Zealand

auto login of Electrical Workers Licensing Group is licenced to temporarily download this document.
Electrical Workers Licensing Group may print this document but not more than 10% of the documents subscribed to may be held in printed form at any one time.

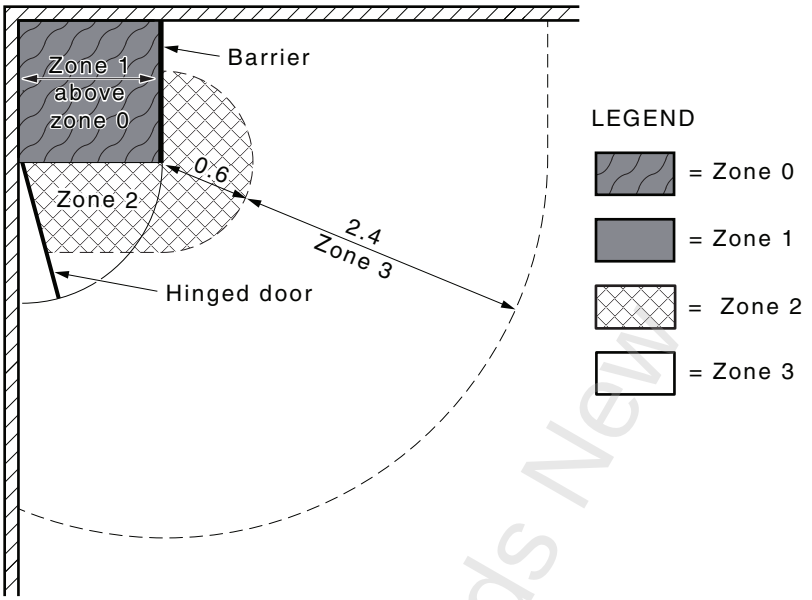

DIMENSIONS IN METRES

FIGURE 6.8 ZONE DIMENSIONS (PLAN)—
ENCLOSED SHOWER WITH HINGED DOOR

Copyright Standards New Zealand

auto login of Electrical Workers Licensing Group is licenced to temporarily download this document.
Electrical Workers Licensing Group may print this document but not more than 10% of the documents subscribed to may be held in printed form at any one time.

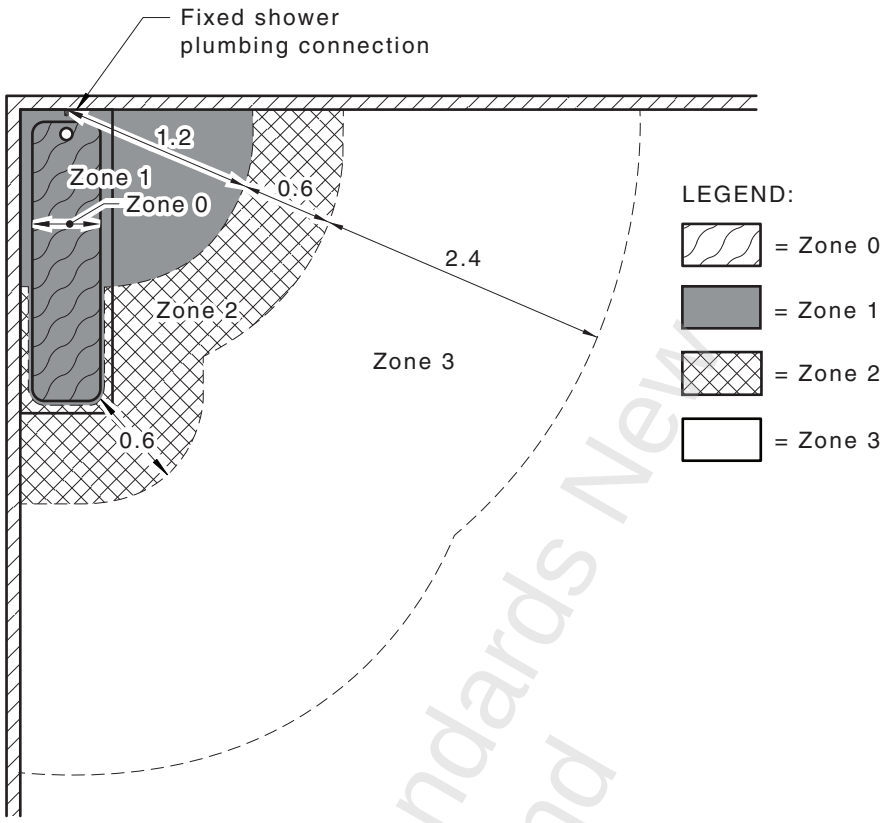

DIMENSIONS IN METRES

FIGURE 6.9 ZONE DIMENSIONS (PLAN)—
BATH WITH SHOWER WITHOUT BARRIER

Copyright Standards New Zealand

auto login of Electrical Workers Licensing Group is licenced to temporarily download this document.
Electrical Workers Licensing Group may print this document but not more than 10% of the documents subscribed to may be held in printed form at any one time.

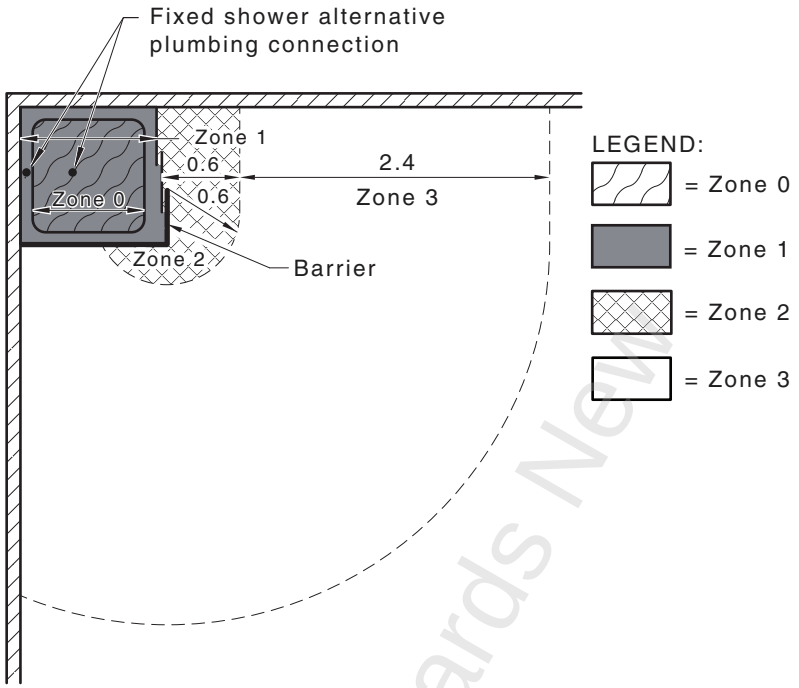

DIMENSIONS IN METRES

FIGURE 6.10 ZONE DIMENSIONS (PLAN)—ENCLOSED SHOWER WITH FIXED PLUMBING CONNECTION ON CEILING OR WALL AND A BARRIER

Copyright Standards New Zealand

auto login of Electrical Workers Licensing Group is licenced to temporarily download this document.
Electrical Workers Licensing Group may print this document but not more than 10% of the documents subscribed to may be held in printed form at any one time.

A1

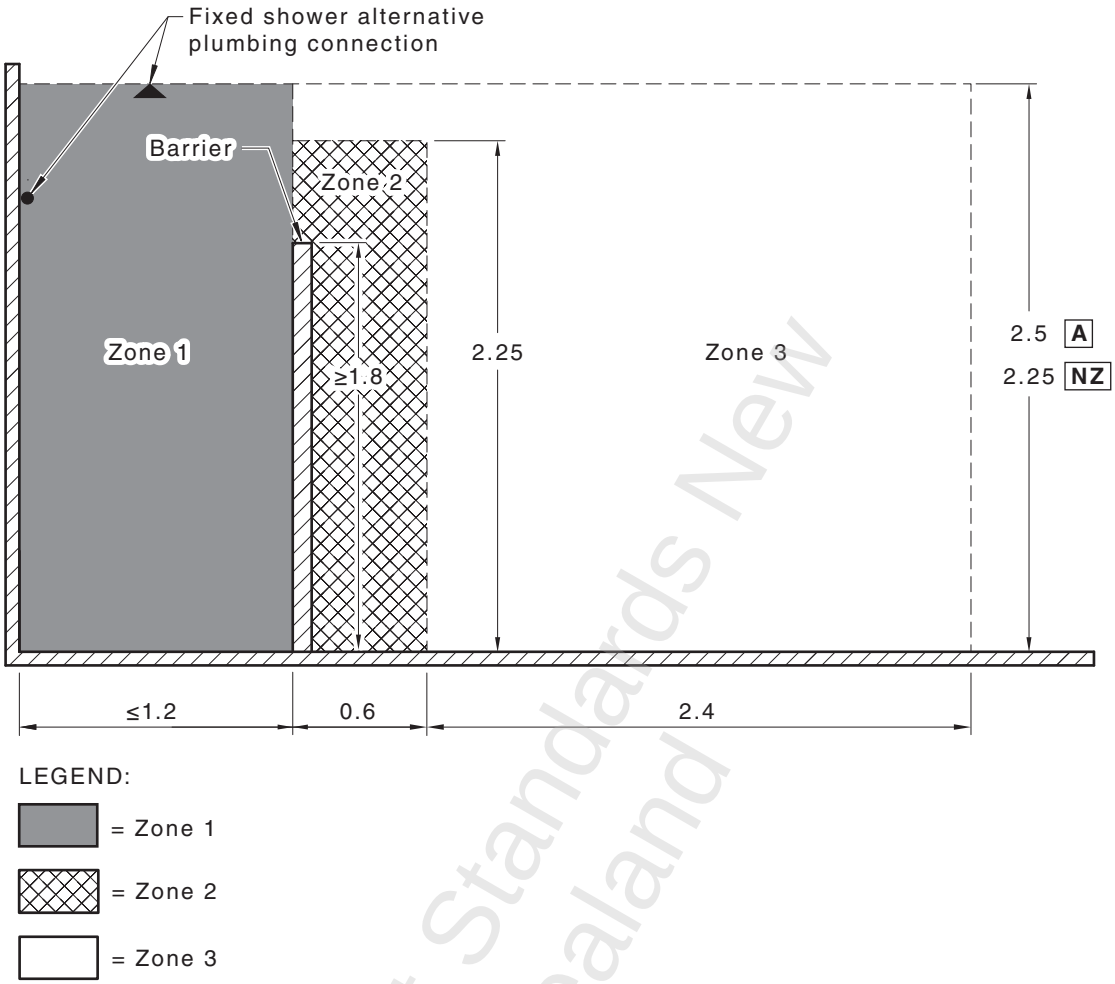

NOTE: Refer to Clause 6.2.2.1(a) for Zone 0.

DIMENSIONS IN METRES

* FIGURE 6.11 ZONE DIMENSIONS (ELEVATION)—SHOWER WITH FIXED PLUMBING CONNECTION ON CEILING OR WALL AND A BARRIER

Copyright Standards New Zealand

auto login of Electrical Workers Licensing Group is licenced to temporarily download this document.
Electrical Workers Licensing Group may print this document but not more than 10% of the documents subscribed to may be held in printed form at any one time.

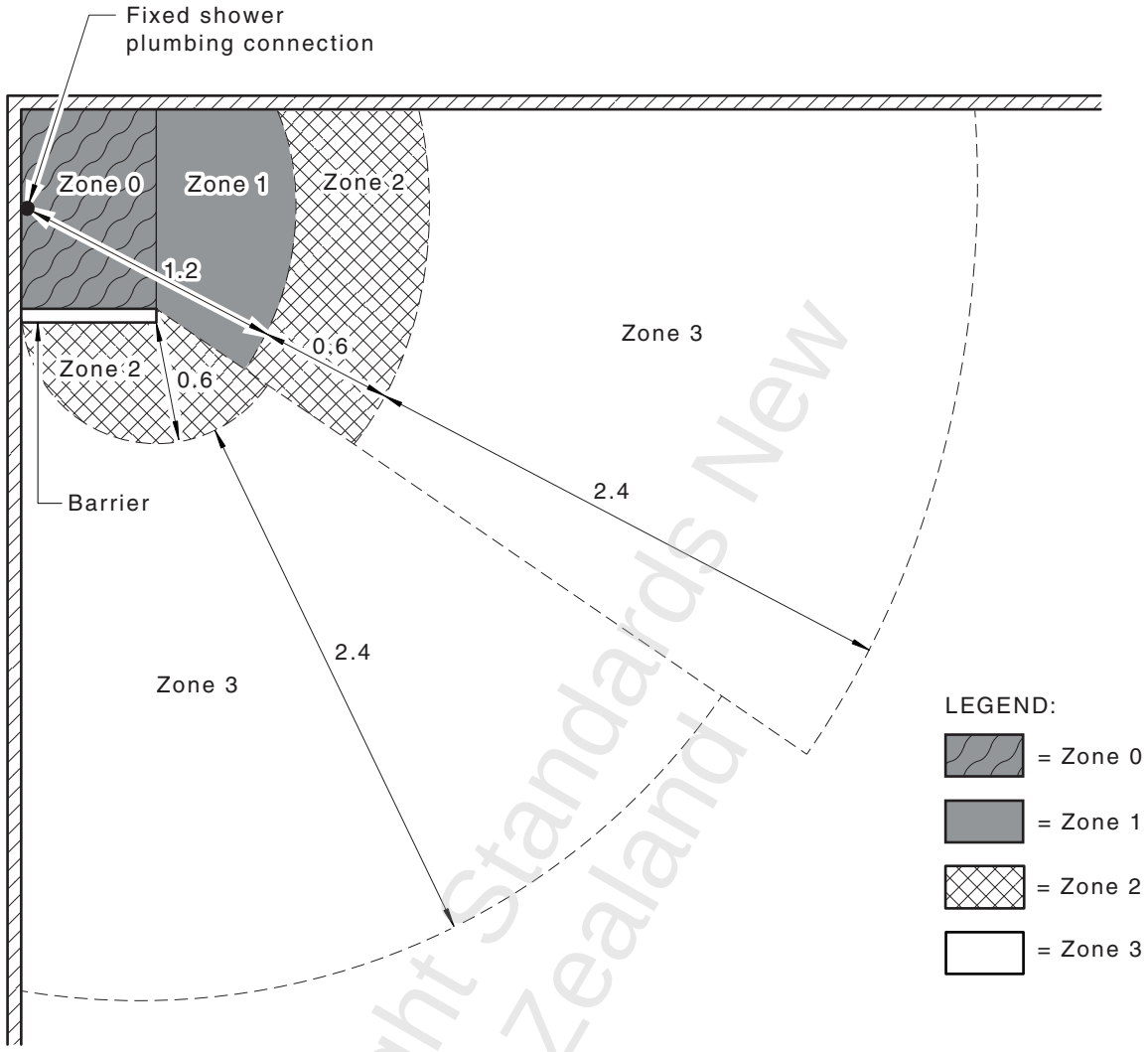

DIMENSIONS IN METRES

FIGURE 6.12 ZONE DIMENSIONS (PLAN)—PARTIALLY ENCLOSED SHOWER WITH FIXED PLUMBING CONNECTION ON WALL

Copyright Standards New Zealand

auto login of Electrical Workers Licensing Group is licenced to temporarily download this document.
Electrical Workers Licensing Group may print this document but not more than 10% of the documents subscribed to may be held in printed form at any one time.

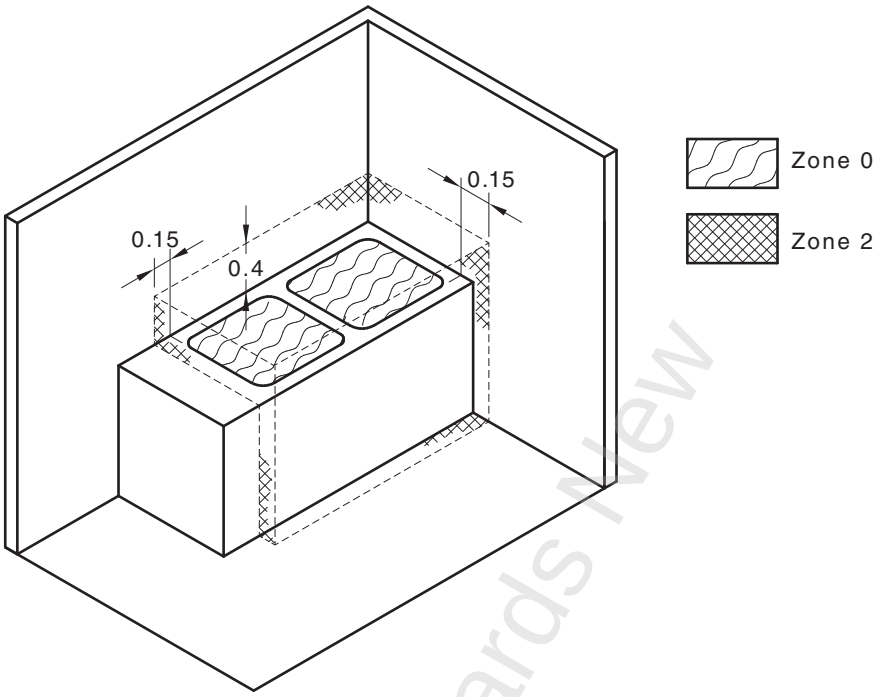

DIMENSIONS IN METRES

* FIGURE 6.13 ZONE DIMENSIONS FOR OTHER FIXED WATER CONTAINERS WITH FIXED WATER OUTLETS WHERE NO CONTAINER HAS A CAPACITY EXCEEDING 40 L

Copyright Standards New Zealand

auto login of Electrical Workers Licensing Group is licenced to temporarily download this document.
Electrical Workers Licensing Group may print this document but not more than 10% of the documents subscribed to may be held in printed form at any one time.

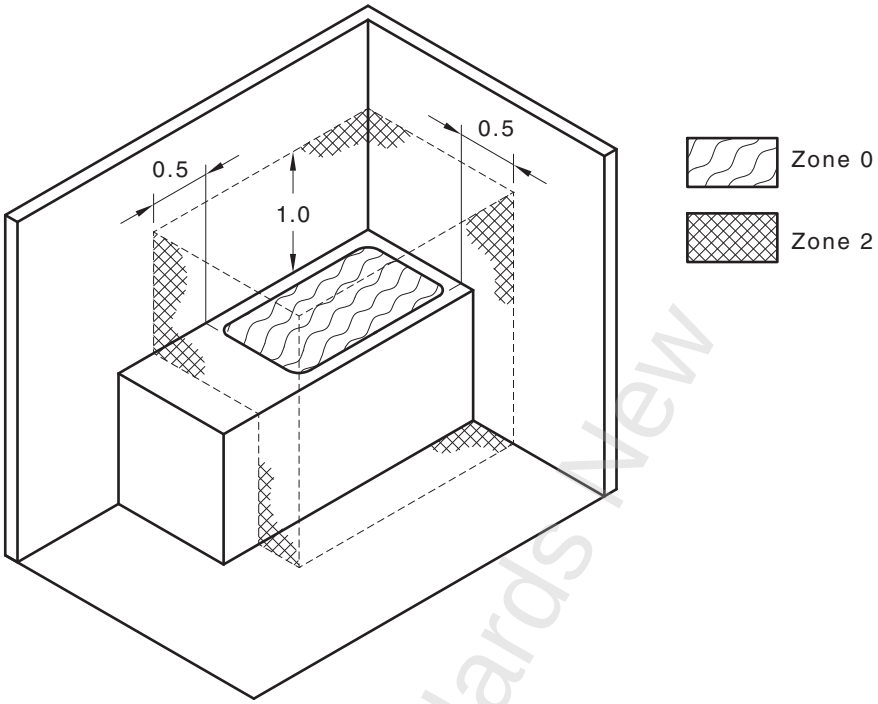

DIMENSIONS IN METRES

* FIGURE 6.14 ZONE DIMENSIONS FOR OTHER FIXED WATER CONTAINERS WITH A FLEXIBLE WATER OUTLET OR WITH A CAPACITY EXCEEDING 40 L

6.3 SWIMMING POOLS, PADDLING POOLS AND SPA POOLS OR TUBS

6.3.1 Scope

The particular requirements of this Clause (Clause 6.3) apply to electrical installations in locations containing swimming pools, paddling (wading) pools and spa pools or tubs and their surrounding zones, where the risk of electric shock is increased by a reduction in body resistance and the likelihood of contact of the body with the water and conductive structure(s) in contact with the general mass of earth.

NOTE: For swimming pools for medical or large commercial use, special requirements may be necessary.

These requirements are based on the classification of zones surrounding the water container.

Ceilings, walls with or without windows, doors, floors, barriers and fixed partitions (e.g. a 1.8 m solid fence) that limit the extent of a room or area containing a swimming pool, paddling pool, spa pool or tub, and fixed partitions that provide effective protection against spraying or splashing water, limit the associated zones.

COPYRIGHT

Copyright Standards New Zealand

auto login of Electrical Workers Licensing Group is licenced to temporarily download this document.
Electrical Workers Licensing Group may print this document but not more than 10% of the documents subscribed to may be held in printed form at any one time.

Due to the nature of these locations, certain methods of protection against electric shock are not permitted. Refer to Clause 6.3.3.1.

The requirements for swimming pools also apply to electrical installations in areas of natural waters, lakes in gravel pits and coastal and similar areas, especially those intended to be occupied by persons for swimming, paddling and similar purposes.

6.3.2 Classification of zones

6.3.2.1 *Swimming pools and paddling pools*

Three zones (Zones 0, 1 and 2) are classified for swimming pools and paddling pools:

(a) Zone 0 shall be the area of the interior of the water container of a swimming pool or paddling pool.

(b) Zone 1 shall be the area limited by the following:

  (i) Zone 0.

  (ii) A vertical plane 2.0 m from the internal rim of the water container.

  (iii) The floor or surface expected to be occupied by persons.

  (iv) The horizontal plane 2.50 m above the floor or the surface.

  (v) When the pool contains a diving board, springboard, starting block or a slide, by—

    (A) the vertical plane situated 1.50 m around the diving board, springboard, starting block or slide; and

    (B) the horizontal plane 2.50 m above the highest surface expected to be occupied by persons.

(c) Zone 2 shall be the area limited by—

  (i) the vertical plane limiting Zone 1 and the parallel vertical plane 1.50 m external to Zone 1; and

  (ii) the floor, or surface expected to be occupied by persons, and the horizontal plane 2.50 m above the floor or surface.

Examples of these zones are shown in Figures 6.15 and 6.16.

6.3.2.2 *Spa pools or tubs*

6.3.2.2.1 *General*

* Spa pools or tubs with a water capacity not exceeding 680 L shall comply with the requirements of Clause 6.2.

A spa pool that is attached to a swimming or paddling pool shall be considered to be an extension to the swimming or paddling pool.

NOTE: Electrical equipment installed behind a fixed panel that provides a degree of protection not less than IPX4, and to which access may only be gained by the use of a tool, would not be considered to be in a classified zone.

COPYRIGHT

Copyright Standards New Zealand

auto login of Electrical Workers Licensing Group is licenced to temporarily download this document.
Electrical Workers Licensing Group may print this document but not more than 10% of the documents subscribed to may be held in printed form at any one time.

6.3.2.2.2 *Water capacity exceeding 5000 L*

Three zones (Zones 0, 1 and 2) are classified for spa pools or tubs with a capacity exceeding 5000 L, as set out in Clause 6.3.2.1.

6.3.2.2.3 *Water capacity not exceeding 5000 L*

Two zones (Zones 0 and 1) are classified for spa pools and tubs with a capacity exceeding 680 L and up to and including 5000 L, as set out below:

(a) Zone 0 shall be the area of the interior of the water container.

(b) Zone 1 shall be the area limited by—

  (i) the vertical plane 1.25 m from the internal rim of the water container; and

  (ii) the floor, or the surface expected to be occupied by persons, and the horizontal plane 2.50 m above the floor or surface.

Examples of these zones are given in Figures 6.17 to 6.19.

6.3.3 Protection against electric shock

6.3.3.1 *Prohibited measures*

The following measures of protection against electric shock are prohibited and shall not be used:

(a) Protection by means of obstacles, in accordance with Clause 1.5.4.5.

(b) Protection by placing out of reach, in accordance with Clause 1.5.4.6.

6.3.3.2 *Supplementary equipotential bonding*

Where electrical equipment situated in a classified zone is required to be earthed, all extraneous conductive parts in Zones 0, 1 and 2 shall be connected together by equipotential bonding conductors and connected to the protective earthing conductor of the electrical equipment, in accordance with Clause 5.6.2.6.

6.3.3.3 *Voltage gradients*

Where electrical equipment is in contact with pool or tub water, failure of insulation may result in a hazardous voltage appearing across or through the water. A very low voltage is sufficient to present a hazard to persons immersed in the water.

Protective measures for such equipment shall include—

(a) use of RCDs with a fixed rated residual current not exceeding 30 mA to protect circuits supplying Class I (earthed conductive parts) equipment; or

(b) electrical separation, in accordance with Clauses 1.5.5.5 and 7.4.

Electrical Workers Licensing Group is licenced to temporarily download this document.
auto login of Electrical Workers Licensing Group may print this document but not more than 10% of the documents subscribed to may be held in printed form at any one time.

Copyright Standards New Zealand

6.3.4 Selection and installation of electrical equipment

6.3.4.1 *Degree of protection required*

Electrical equipment permitted to be installed in a classified zone shall have at least the following degree of protection:

(a) In Zone 0—IPX8.

(b) In Zone 1—IPX5.

(c) In Zone 2—IPX4.

The requirements for selection and installation of electrical equipment are provided in Table 6.2.

6.3.4.2 *Wiring systems*

Wiring systems shall be installed so as to prevent—

(a) entry of moisture to any connection; and

(b) water siphoning through any wiring enclosure or cable.

Bare aerial conductors shall not be installed over Zones 0, 1 or 2.

Other types of aerial cables shall be installed in accordance with Clause 3.12.

6.3.4.3 *Socket-outlets*

Socket-outlets shall not be installed within 0.3 m of any floor or any other horizontal surface in any location where the floor or surface is likely to become wet.

Regardless of the degree of protection provided by the equipment, the following requirements apply to the installation of socket-outlets in classified zones:

(a) *Zone 0* Socket-outlets shall not be installed in Zone 0.

(b) *Zone 1* Socket-outlets not necessary for the connection of pool equipment shall not be installed in Zone 1.

Socket-outlets necessary for the connection of pool equipment shall be as follows:

(i) Provided with the required degree of protection.

(ii) Located—

(A) at a height not less than 0.45 m above ground level and at a horizontal distance not less than 1.25 m from the internal rim of the water container; or

(B) beneath and not less than 0.5 m from the edge of a fixed continuous horizontal barrier that is not less than 1.25 m wide measured from the internal rim of the water container.

auto login of Electrical Workers Licensing Group is licenced to temporarily download this document.
Electrical Workers Licensing Group may print this document but not more than 10% of the documents subscribed to may be held in printed form at any one time.

Copyright Standards New Zealand

(iii) One of the following:

(A) Supplied individually as a separated circuit, in accordance with Clause 7.4.

(B) Supplied as an SELV or a PELV system, in accordance with Clause 7.5.

(C) Protected by a residual-current device with a fixed rated residual current not exceeding 30 mA.

(iv) Controlled by a switch that requires manual operation and does not operate automatically by the insertion or withdrawal of a plug.

(c) *Zone 2* Socket-outlets installed in Zone 2 shall be provided with the required degree of protection and—

(i) supplied individually as a separated circuit, in accordance with Clause 7.4; or

(ii) supplied as an SELV or a PELV system, in accordance with Clause 7.5; or

(iii) protected by an RCD with a fixed rated residual current not exceeding 30 mA.

6.3.4.4 *Switches and other accessories*

The following requirements apply to the installation of switches and accessories, other than socket-outlets, in classified zones:

(a) *Zone 0* Switches and other accessories shall not be installed in Zone 0.

(b) *Zone 1 and 2* Switches and other accessories installed in Zone 1 or Zone 2 shall be provided with the required degree of protection.

A1

6.3.4.5 *Luminaires, appliances and other electrical equipment*

6.3.4.5.1 *General*

The following requirements apply to the installation of luminaires, appliances and other items of electrical equipment, excluding those specified in Clauses 6.3.4.3 (socket-outlets) and 6.3.4.4 (switches and other accessories), in classified zones.

Luminaires, appliances and other electrical equipment installed in Zone 0 shall be—

(a) designed and constructed specifically for use in a swimming or spa pool; and

(b) provided with the required degree of protection; and

(c) appliances and other electrical equipment shall comply with the requirements of Clause 1.7.3.

Copyright Standards New Zealand

auto login of Electrical Workers Licensing Group is licenced to temporarily download this document.
Electrical Workers Licensing Group may print this document but not more than 10% of the documents subscribed to may be held in printed form at any one time.

A1

6.3.4.5.2 *Zone 0 Luminaires*

Luminaires installed in Zone 0 shall—

(a) be compliant with AS/NZS 60598.1 and AS/NZS 60598.2.18; and

(b) be supplied by SELV at an output nominal voltage not exceeding 12 VAC or 30 V ripple-free d.c.; and

(c) not be provided with a protective earthing conductor, in accordance with Clause 5.4.3.

6.3.4.5.3 *Zone 0 Appliances and other electrical equipment*

Appliances or other items of electrical equipment installed in Zone 0 shall be supplied—

(a) from an individual source installed outside Zone 0;

NOTE: An individual source may be an individual isolation transformer or an individual winding on an isolation transformer having a number of secondary windings, provided that the output complies with Clause 7.5.3.

(b) at a nominal voltage not exceeding 12 V a.c. or 30 V ripple-free d.c.; and

(c) as an SELV or a PELV system, in accordance with Clause 7.5.

6.3.4.5.4 *Zone 1 Luminaires, appliances and other electrical equipment*

Luminaires, appliances and other electrical equipment installed in Zone 1 shall be provided with the required degree of protection and—

(a) supplied as an SELV or a PELV system, in accordance with Clause 7.5; or

(b) of Class II construction (double or reinforced insulation) and fixed in position; or

(c) of Class I construction (earthed conductive parts), fixed in position and supplied from a circuit protected by an RCD with a fixed rated residual current not exceeding 30 mA.

6.3.4.5.5 *Zone 2 Luminaires, appliances and other electrical equipment*

Luminaires, appliances and other electrical equipment installed in Zone 2 shall be provided with the required degree of protection and—

(a) supplied as an SELV or a PELV system, in accordance with Clause 7.5; or

(b) supplied individually as a separated circuit, in accordance with Clause 7.4; or

(c) of Class II construction (double or reinforced insulation); or

(d) of Class I construction (earthed conductive parts) and supplied from a circuit protected by an RCD with a fixed rated residual current not exceeding 30 mA.

auto login of Electrical Workers Licensing Group is licenced to temporarily download this document.
Electrical Workers Licensing Group may print this document but not more than 10% of the documents subscribed to may be held in printed form at any one time.

Copyright Standards New Zealand

A1

NOTES:

1 Heating cable systems in Zones 1 and 2 intended for heating the location and that are embedded in the floor and protected in accordance with Clause 4.10 may be installed.

2 The use of a purpose made pump and installation to the manufacturer's instructions complying with the requirements of AS/NZS 60335.2.41 for each zone is deemed to comply with the requirements of this Clause.

6.3.4.6 *Switchboards*

A switchboard shall not be installed within any classified zone.

6.3.4.7 *Electricity generation systems*

* Electricity generation systems, including engine-driven generator sets, stand-alone power systems, grid-connected inverter systems and battery systems shall not be installed within any classified zone.

6.3.4.8 *Electricity distributor's electrical equipment*

* Pools and spas shall not be located in areas containing electrical equipment, including connection pits and cabinets, owned by the electricity distributor, that result in such equipment being incorporated into any classified zone.

Copyright Standards New Zealand

auto login of Electrical Workers Licensing Group is licenced to temporarily download this document.
Electrical Workers Licensing Group may print this document but not more than 10% of the documents subscribed to may be held in printed form at any one time.

TABLE 6.2

SELECTION AND INSTALLATION OF ELECTRICAL EQUIPMENT FOR SWIMMING POOLS, PADDLING POOLS AND SPA POOLS OR TUBS

Equipment	Zone 0	Zone 1	Zone 2
Clause 6.3.4.3—Socket-outlets	Not permitted	Not permitted for general use For pool equipment only: IPX5 and— (a) (i) ≥0.45 m high; and ≥1.25 m from internal rim; or (ii) under and ≥0.5 m from edge of fixed continuous horizontal barrier ≥1.25 m wide. (b) (i) separated supply; or (ii) SELV or PELV supply; or (iii) RCD protection.	IPX4 and— (a) separated supply; or (b) SELV or PELV supply; or (c) RCD protection.
Clause 6.3.4.4—Switches/accessories	Not permitted	IPX5	IPX4
Clause 6.3.4.5(a), (b) and (c)—Luminaires, appliances and other equipment	IPX8; and specifically for use; and 12 V a.c./30 V d.c. SELV or PELV supply from source outside zone No earth	IPX5 and— (a) SELV or PELV supply; or (b) Class II construction (double or reinforced insulation); or (c) Class I construction (earthed conductive parts), fixed in position and RCD protection.	IPX4 and— (a) SELV or PELV supply; or (b) separated supply; or (c) Class II construction (double or reinforced insulation); or (d) Class I construction (earthed conductive parts), and RCD protection.
Clause 6.3.4.5(d)—Heating cable systems	Not applicable	Permitted where embedded in the floor area under the zone and protected to Clause 4.10.5	As for Zone 1

(*continued*)

COPYRIGHT

auto login of Electrical Workers Licensing Group is licenced to temporarily download this document.
Electrical Workers Licensing Group may print this document but not more than 10% of the documents subscribed to may be held in printed form at any one time.

Copyright Standards New Zealand

TABLE 6.2 (*continued*)

Equipment	Zone 0	Zone 1	Zone 2
Clause 6.3.4.6—Switchboards	Not permitted	Not permitted	Not permitted
* Clause 6.3.4.7—Electricity generation systems	Not permitted	Not permitted	Not permitted
* Clause 6.3.4.8—Electricity distributor's electrical equipment	Not permitted	Not permitted	Not permitted

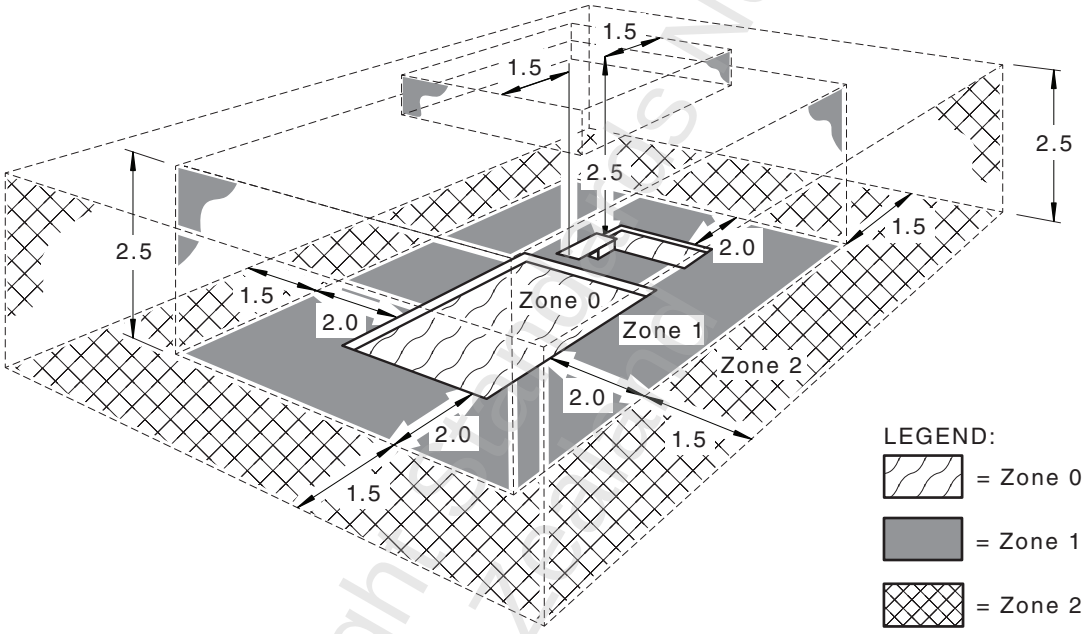

DIMENSIONS IN METRES

FIGURE 6.15 ZONE DIMENSIONS OF IN-GROUND SWIMMING POOLS

Copyright Standards New Zealand

auto login of Electrical Workers Licensing Group is licenced to temporarily download this document.
Electrical Workers Licensing Group may print this document but not more than 10% of the documents subscribed to may be held in printed form at any one time.

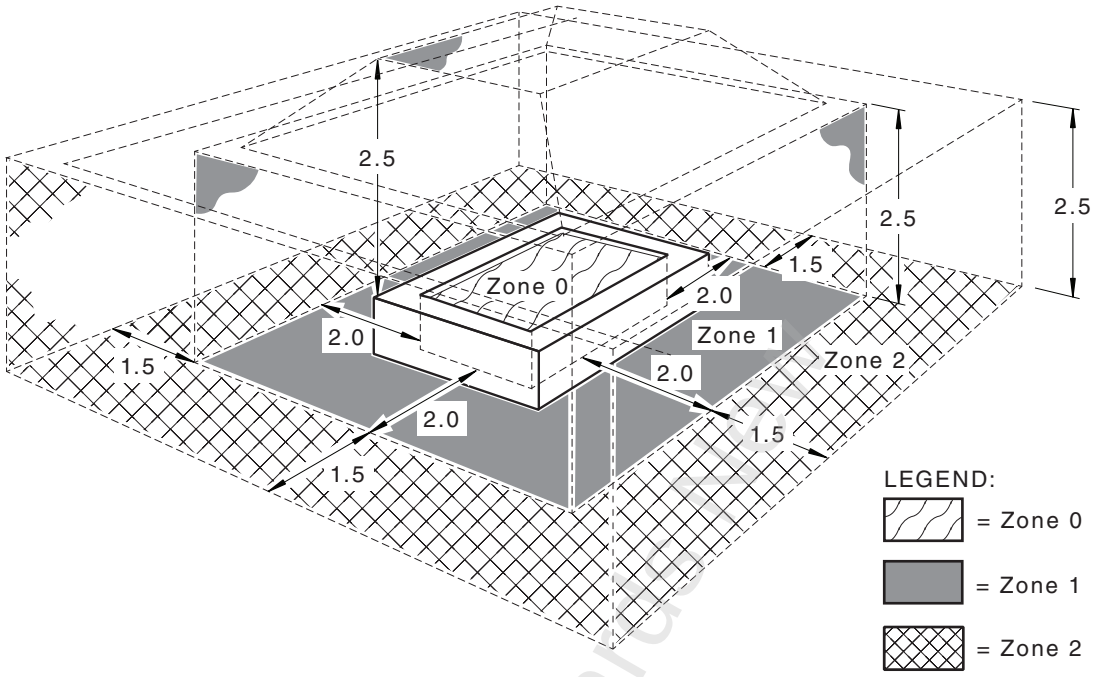

DIMENSIONS IN METRES

FIGURE 6.16 ZONE DIMENSIONS OF ABOVE-GROUND SWIMMING POOLS

Copyright Standards New Zealand

auto login of Electrical Workers Licensing Group is licenced to temporarily download this document.
Electrical Workers Licensing Group may print this document but not more than 10% of the documents subscribed to may be held in printed form at any one time.

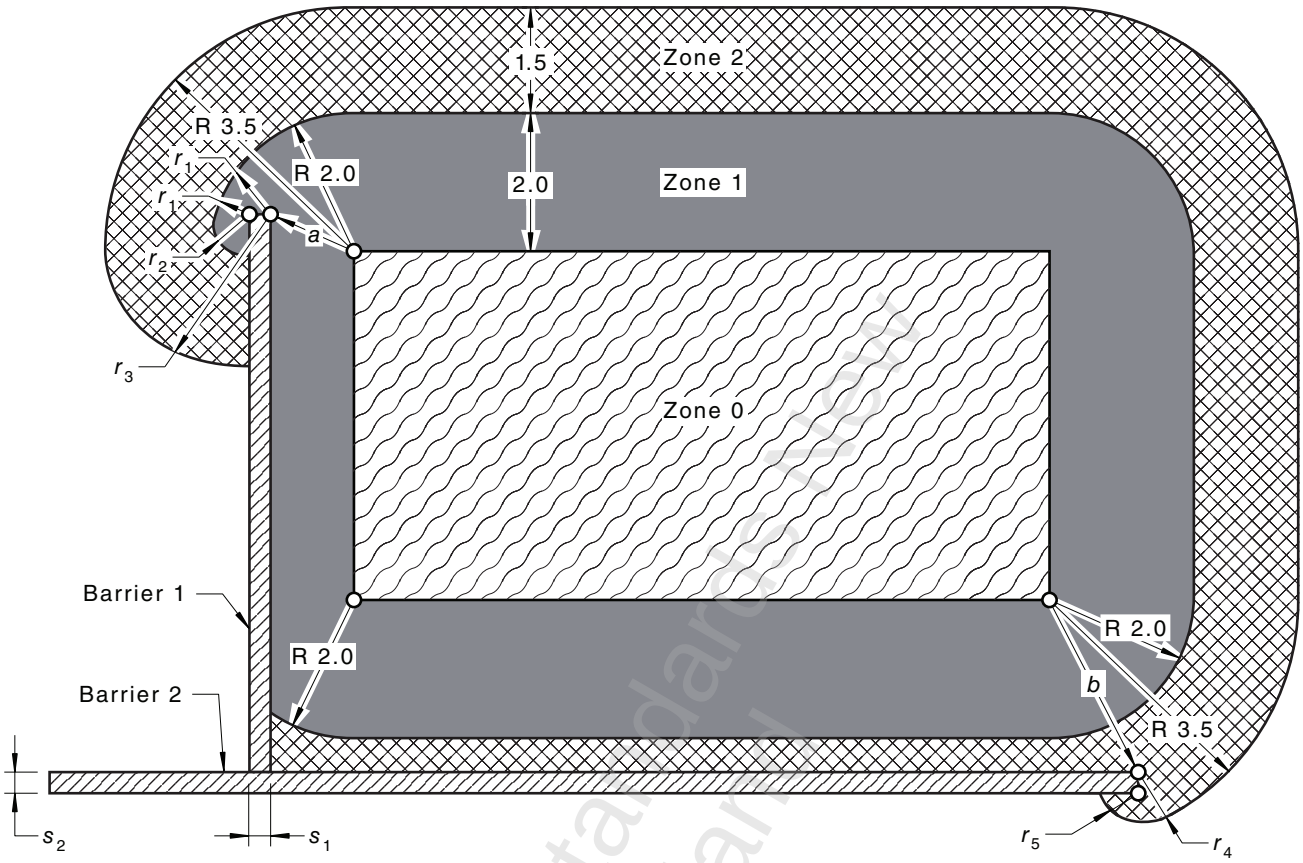

LEGEND:

r_1 = 2.0 – a
s_1 = Width of barrier 1
r_2 = r_1 – s_1
s_2 = Width of barrier 2
r_3 = 3.5 – *a*
r_4 = 3.5 – *b*
r_5 = r_4 – s_2

= Zone 0
= Zone 1
= Zone 2

NOTE: These dimensions apply to swimming pools, paddling pools and wading pools.

DIMENSIONS IN METRES

FIGURE 6.17 ZONE DIMENSIONS OF SWIMMING POOLS WITH FIXED BARRIERS (MINIMUM 1.8 m HIGH)

COPYRIGHT

Copyright Standards New Zealand

Electrical Workers Licensing Group is licenced to temporarily download this document.
auto login of Electrical Workers Licensing Group may print this document but not more than 10% of the documents subscribed to may be held in printed form at any one time.

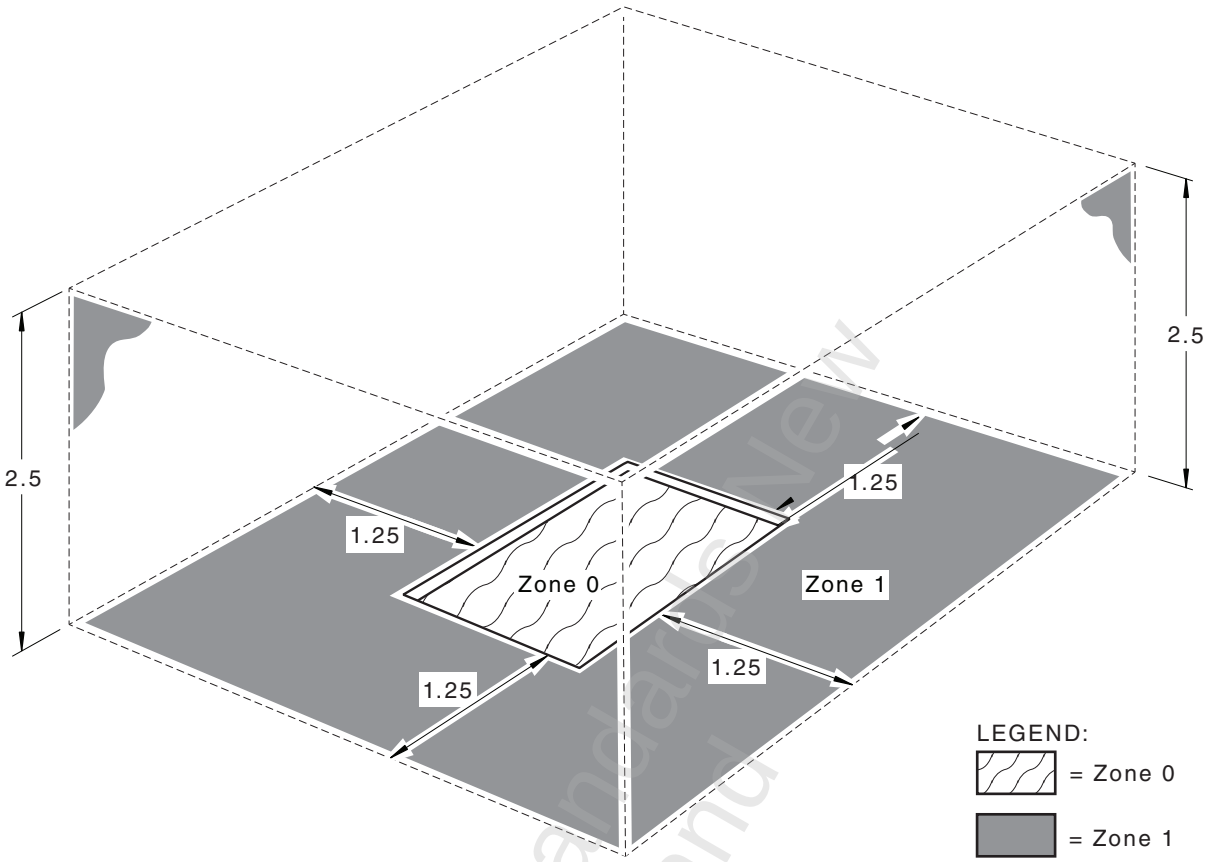

DIMENSIONS IN METRES

FIGURE 6.18 ZONE DIMENSIONS OF IN-GROUND SPA POOLS AND TUBS WITH WATER CAPACITY NOT EXCEEDING 5000 L

Copyright Standards New Zealand

auto login of Electrical Workers Licensing Group is licenced to temporarily download this document.
Electrical Workers Licensing Group may print this document but not more than 10% of the documents subscribed to may be held in printed form at any one time.

auto login of Electrical Workers Licensing Group is licenced to temporarily download this document.
Electrical Workers Licensing Group may print this document but not more than 10% of the documents subscribed to may be held in printed form at any one time.

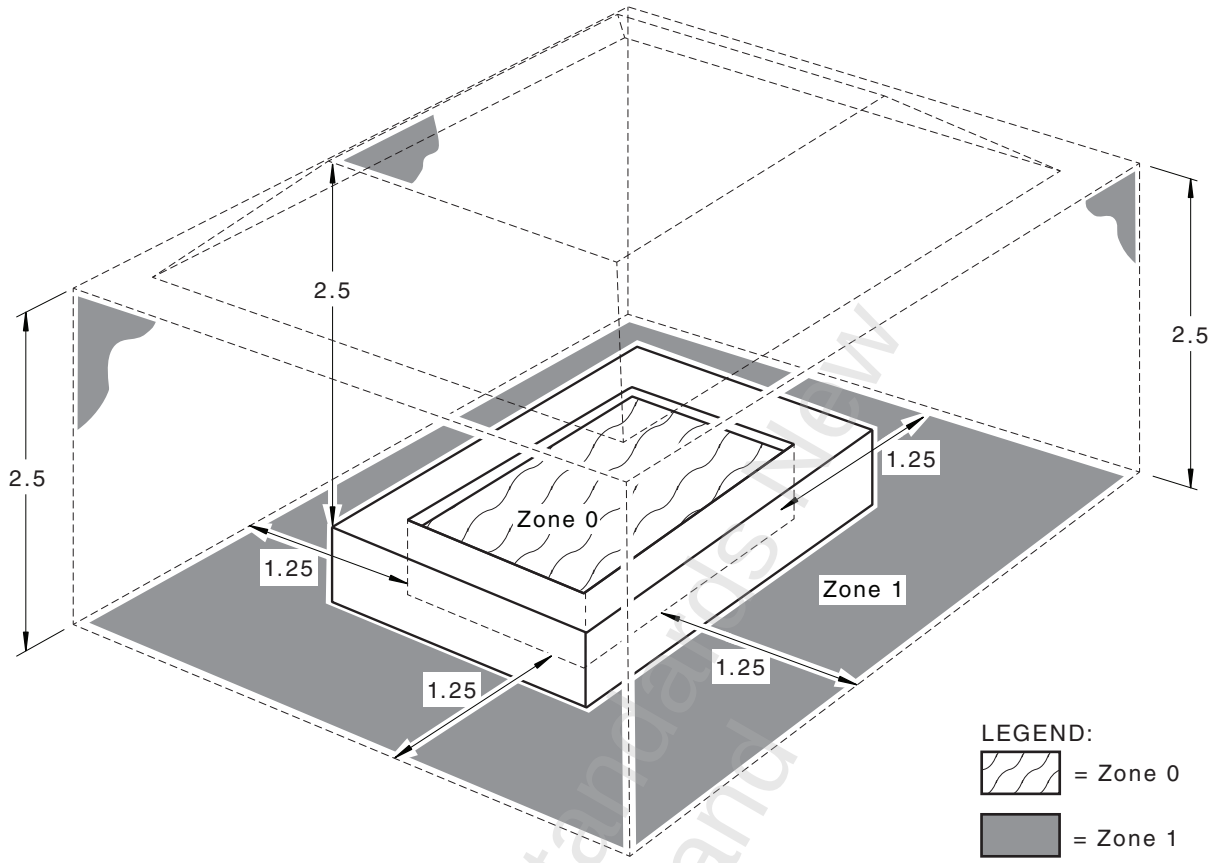

DIMENSIONS IN METRES

FIGURE 6.19 ZONE DIMENSIONS OF ABOVE-GROUND SPA POOLS AND TUBS WITH WATER CAPACITY NOT EXCEEDING 5000 L

6.4 FOUNTAINS AND WATER FEATURES

6.4.1 Scope

A1 **The particular requirements of this Clause (Clause 6.4) apply to electrical installations in locations containing water containers of fountains and water features and their surrounding zones, where the risk of electric shock is increased by a reduction in body resistance and the likelihood of contact of the body with the water and conductive structure(s) in contact with the general mass of earth.**

These requirements are based on the classification of zones surrounding the water container associated with the fountain or water feature and are intended to—

(a) protect electrical material and electrical equipment from the corrosive effects of chemicals used in the treatment of water in fountains and water features; and

COPYRIGHT

(b) counter the increased risks of using electrical equipment in areas where the body may be partially immersed in water.

Exception:

These requirements need not apply to fountains or water features where—

(a) the depth of water does not exceed 0.3 m; or

(b) suitable means are provided to restrict entry of persons to the water.

Ceilings, walls with or without windows, doors and floors that limit the extent of a room or area containing a fountain or water feature and fixed partitions that provide effective protection against spraying or splashing water, limit the associated zones.

Due to the nature of these locations, certain methods of protection against electric shock are not permitted. Refer to Clause 6.4.3.2.2.

6.4.2 Classification of zones

Two zones (Zones 0 and 1) are classified for fountains and water features:

(a) Zone 0 shall be the area of the interior of the water containers including any recesses in their walls or floors or the interior of water jets or waterfalls.

(b) Zone 1 shall be the area limited by the following:

(i) The vertical plane 2.0 m from the internal rim of the water containers.

(ii) The floor, or surface expected to be occupied by persons, and the horizontal plane 2.50 m above the floor or surface.

(iii) When the fountain or water feature contains sculptures and decorative water containers, by—

(A) the vertical plane situated 1.50 m around the sculptures and decorative water containers; and

(B) the horizontal plane 2.50 m above the sculptures and decorative water containers.

Examples of these zones are shown in Figures 6.20 and 6.21.

6.4.3 Protection against electric shock

6.4.3.1 *Use of SELV*

Where SELV is used, regardless of the nominal voltage, basic protection shall be provided in accordance with Clause 7.5.5.

6.4.3.2 *Application of protective measures against electric shock*

6.4.3.2.1 *Supply*

Electrical equipment shall be—

(a) earthed and protected by an RCD with a fixed rated residual current not exceeding 30 mA;

COPYRIGHT

Copyright Standards New Zealand

auto login of Electrical Workers Licensing Group is licenced to temporarily download this document.
Electrical Workers Licensing Group may print this document but not more than 10% of the documents subscribed to may be held in printed form at any one time.

(b) supplied at either extra-low voltage or low voltage through an isolating transformer complying with AS/NZS 61558, and not earthed; or

(c) supplied by other suitable measures that take account of the electrical equipment construction, installation methods and physical location.

6.4.3.2.2 *Prohibited measures*

The following measures of protection against electric shock are prohibited and shall not be used:

(a) Protection by means of obstacles, in accordance with Clause 1.5.4.5.

(b) Protection by placing out of reach, in accordance with Clause 1.5.4.6.

6.4.4 Selection and installation of electrical equipment

6.4.4.1 *Degree of protection required*

Electrical equipment permitted to be installed in the classified zone shall have at least the following degree of protection:

(a) In Zone 0—IPX8.

(b) In Zone 1—IPX5.

The requirements for selection and installation of electrical equipment are provided in Table 6.3.

6.4.4.2 *Wiring systems*

Wiring systems for a fountain or water feature shall be—

(a) elastomer or thermoplastic insulated and sheathed copper cables or flexible cords suitable for immersion in the type of water being used;

(b) where subject to mechanical damage, installed in a wiring enclosure; and

(c) installed so as to prevent—

  (i) entry of moisture to any connection; and

  (ii) water siphoning through any wiring enclosure or cable.

6.4.4.3 *Socket-outlets*

Socket-outlets shall not be installed in Zone 0 or Zone 1.

6.4.4.4 *Switches and other accessories*

The following requirements apply to the installation of switches and accessories, other than socket-outlets, in classified zones:

(a) *Zone 0* Switches and other accessories shall not be installed in Zone 0.

(b) *Zone 1* Switches and other accessories installed in Zone 1 shall be provided with the required degree of protection.

auto login of Electrical Workers Licensing Group is licenced to temporarily download this document.
Electrical Workers Licensing Group may print this document but not more than 10% of the documents subscribed to may be held in printed form at any one time.

Copyright Standards New Zealand

A1

6.4.4.5 *Luminaires, appliances and other electrical equipment*

6.4.4.5.1 *General*

The following requirements apply to the installation of luminaires, appliances and other items of electrical equipment, excluding those specified in Clauses 6.3.4.3 (socket-outlets) and 6.3.4.4 (switches and other accessories), in classified zones.

Luminaires, appliances and other electrical equipment installed in Zone 0 shall be—

(a) designed and constructed specifically for use in a swimming or spa pool; and

(b) provided with the required degree of protection; and

(c) appliances and other electrical equipment shall comply with the requirements of Clause 1.7.3.

6.4.4.5.2 *Zone 0 Luminaires*

Luminaires installed in Zone 0 shall—

(a) be compliant with AS/NZS 60598.1 and AS/NZS 60598.2.18; and

(b) be supplied by SELV at an output nominal voltage not exceeding 12 V a.c. or 30 V ripple-free d.c.; and

(c) not be provided with a protective earthing conductor, in accordance with Clause 5.4.3.

6.4.4.5.3 *Zone 0 Appliances and other electrical equipment*

Appliances or other items of electrical equipment installed in Zone 0 shall be supplied—

(a) from an individual source installed outside Zone 0;

NOTE: An individual source may be an individual isolation transformer or an individual winding on an isolation transformer having a number of secondary windings, provided that the output complies with Clause 7.5.3.

(b) at a nominal voltage not exceeding 12 VAC or 30 V ripple-free d.c.; and

(c) as an SELV or a PELV system, in accordance with Clause 7.5.

6.4.4.5.4 *Zone 1 Luminaires, appliances and other electrical equipment*

Luminaires, appliances and other electrical equipment installed in Zone 1 shall be provided with the required degree of protection and—

(a) supplied as an SELV or a PELV system, in accordance with Clause 7.5; or

(b) of Class II construction (double or reinforced insulation) and fixed in position; or

auto login of Electrical Workers Licensing Group is licenced to temporarily download this document.
Electrical Workers Licensing Group may print this document but not more than 10% of the documents subscribed to may be held in printed form at any one time.

Copyright Standards New Zealand

A1 (c) of Class I construction (earthed conductive parts), fixed in position and supplied from a circuit protected by an RCD with a fixed rated residual current not exceeding 30 mA.

NOTES:

1 Heating cables that are embedded in the floor are not within any specified zone, and may therefore be installed in accordance with Clause 4.10.

2 The use of a purpose made pump and installation to the manufacturer's instructions complying with the requirements of AS/NZS 60335.2.41 for each zone is deemed to comply with the requirements of this Clause.

6.4.4.6 *Switchboards*

A switchboard shall not be installed within any classified zone.

* **6.4.4.7** *Electricity generation systems*

Electricity generation systems, including engine-driven generator sets, stand-alone power systems, grid-connected inverter systems and battery systems, shall not be installed within any classified zone.

* **6.4.4.8** *Electricity distributor's electrical equipment*

Fountains and water features shall not be located in areas containing electrical equipment, including connection pits and cabinets, owned by the electricity distributor, that result in such equipment being incorporated into any classified zone.

* **TABLE 6.3**
SELECTION AND INSTALLATION OF ELECTRICAL EQUIPMENT FOR FOUNTAINS AND WATER FEATURES

Equipment	Zone 0	Zone 1
Clause 6.4.4.3—Socket-outlets	Not permitted	Not permitted
Clause 6.4.4.4—Switches/accessories	Not permitted	Shall be provided with the required degree of protection
Clause 6.4.4.5—Luminaires, appliances and other equipment	(a) Designed and constructed specifically for use in a fountain or water feature. (b) Provided with the required degree of protection. (c) Supplied— (i) from an individual source installed outside Zone 0; (ii) at a nominal voltage not exceeding 12 V a.c. or 30 V ripple free d.c.; and (ii) as an SELV or a PELV system. Luminaires shall not be provided with a protective earth.	Shall be provided with the required degree of protection and— (a) supplied as an SELV or a PELV system; (b) of Class II construction (double or reinforced insulation) and fixed in position; or (c) of Class I construction (earthed conductive parts), fixed in position and supplied from a circuit protected by an RCD with a fixed rated residual current not exceeding 30 mA.

(*continued*)

COPYRIGHT

Copyright Standards New Zealand

auto login of Electrical Workers Licensing Group is licenced to temporarily download this document.
Electrical Workers Licensing Group may print this document but not more than 10% of the documents subscribed to may be held in printed form at any one time.

TABLE 6.3 (*continued*)

Equipment	Zone 0	Zone 1
Clause 6.4.4.6—Switchboards	Not permitted	Not permitted
* Clause 6.4.4.7—Electricity generation systems	Not permitted	Not permitted
* Clause 6.4.4.8—Electricity distributor's electrical equipment	Not permitted	Not permitted

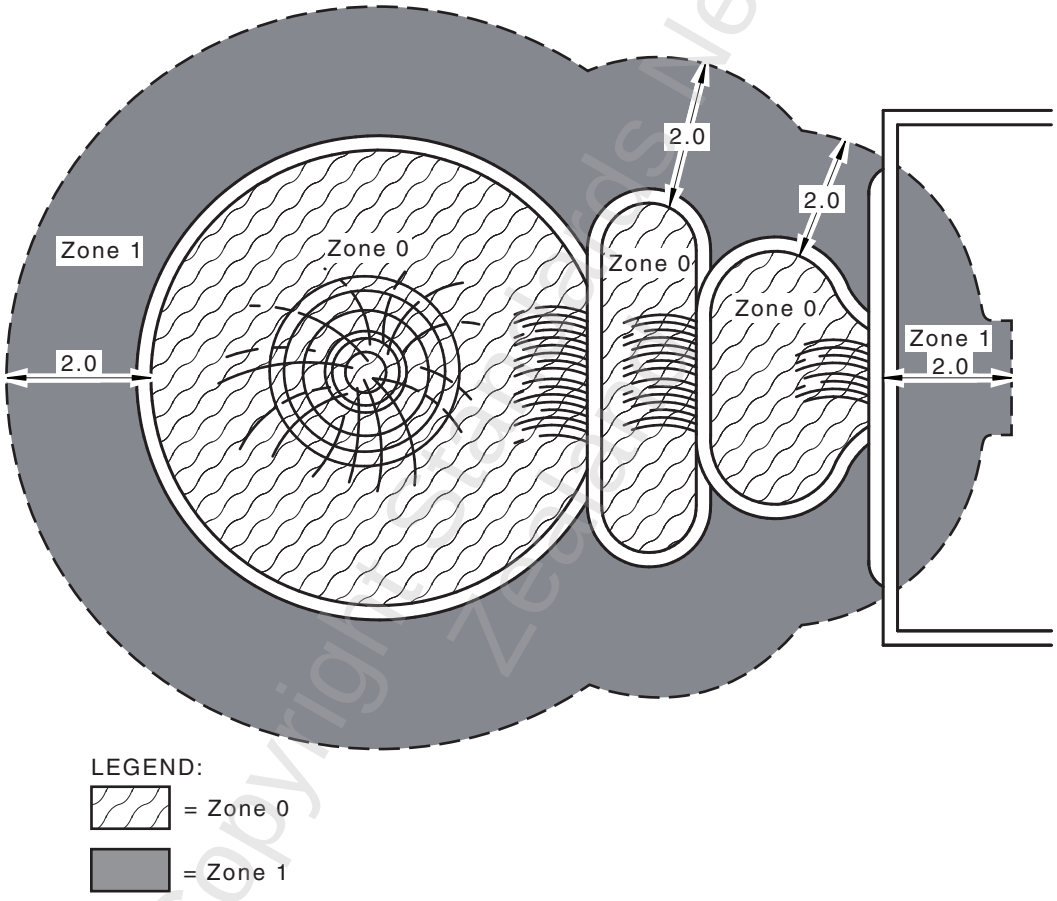

DIMENSIONS IN METRES

FIGURE 6.20 EXAMPLE FOR DETERMINATION OF THE ZONES OF A FOUNTAIN (PLAN)

auto login of Electrical Workers Licensing Group is licenced to temporarily download this document.
Electrical Workers Licensing Group may print this document but not more than 10% of the documents subscribed to may be held in printed form at any one time.

Copyright Standards New Zealand

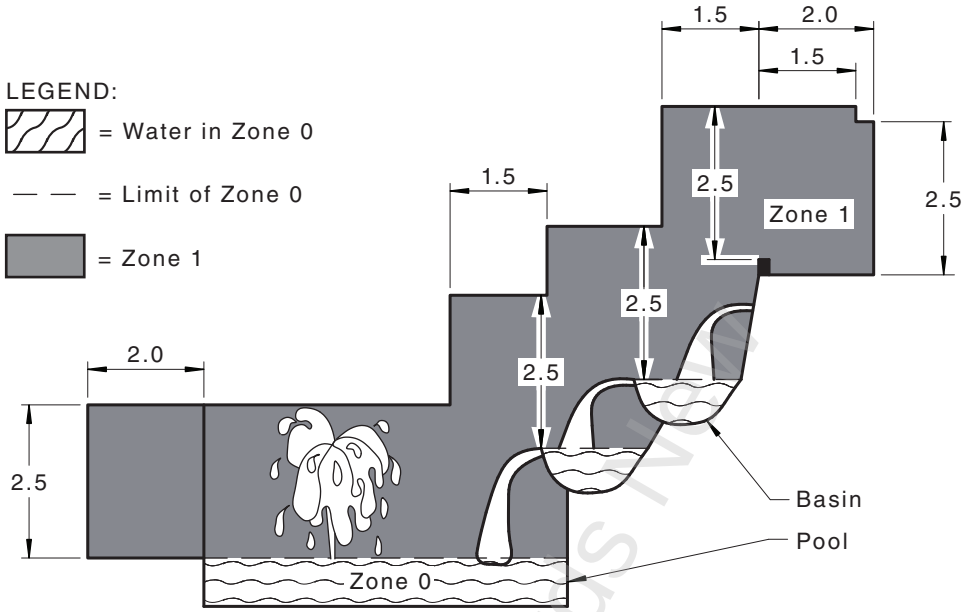

DIMENSIONS IN METRES

FIGURE 6.21 EXAMPLE FOR DETERMINATION OF THE ZONES OF A FOUNTAIN (ELEVATION)

6.5 SAUNAS

6.5.1 Scope

The particular requirements of this Clause (Clause 6.5) apply to electrical installations in rooms or enclosures containing heating equipment used exclusively for sauna heating.

These requirements are based on the classification of zones surrounding the sauna heater.

* Due to the nature of these locations, certain methods of protection against electric shock are not permitted. Refer to Clause 6.5.3.2.

6.5.2 Classification of zones

Three zones (Zones 1, 2 and 3) are classified for locations containing a sauna heater:

(a) Zone 1 shall be the area containing the sauna heater limited by—

(i) the vertical plane 0.5 m from the external edge of the sauna heater; and

(ii) the floor, or surface expected to be occupied by persons, and the cold side of the thermal insulation of the ceiling.

COPYRIGHT

Copyright Standards New Zealand

auto login of Electrical Workers Licensing Group is licenced to temporarily download this document.
Electrical Workers Licensing Group may print this document but not more than 10% of the documents subscribed to may be held in printed form at any one time.

(b) Zone 2 shall be the area limited by—

(i) the vertical plane limiting Zone 1 and the cold side of the thermal insulation of the walls of the sauna room or enclosure; and

(ii) the floor, or surface expected to be occupied by persons, and the horizontal plane 1.0 m above the floor.

(c) Zone 3 shall be the area limited by—

(i) the vertical plane limiting Zone 1 and the cold side of the thermal insulation of the walls of the sauna room or enclosure; and

(ii) the horizontal plane 1.0 m above the floor and the cold side of the thermal insulation of the ceiling.

NOTE: Zone 3 is directly above Zone 2. Examples of these zones are given in Figure 6.22.

6.5.3 Protection against electric shock

6.5.3.1 *Use of SELV*

Where SELV is used, regardless of the nominal voltage, basic protection shall be provided in accordance with Clause 7.5.5.

6.5.3.2 *Prohibited measures*

The following measures of protection against electric shock are prohibited and shall not be used:

(a) Protection by means of obstacles, in accordance with Clause 1.5.4.5.

(b) Protection by placing out of reach, in accordance with Clause 1.5.4.6.

6.5.3.3 *Additional protection by RCD*

All equipment within the sauna room, other than the sauna heater, shall be provided with additional protection by an RCD with a fixed rated residual current not exceeding 30 mA.

6.5.4 Selection and installation of electrical equipment

6.5.4.1 *Degree of protection required*

Electrical equipment installed within the sauna room shall have a degree of protection of at least IPX4B or IP24.

6.5.4.2 *Requirements in classified zones*

The installation of electrical equipment and wiring in classified zones shall be in accordance with the following:

(a) *Zone 1* Only electrical equipment belonging to the sauna heater shall be installed in Zone 1.

(b) *Zone 2* There are no special requirements concerning heat resistance of electrical equipment for Zone 2.

auto login of Electrical Workers Licensing Group is licenced to temporarily download this document.
Electrical Workers Licensing Group may print this document but not more than 10% of the documents subscribed to may be held in printed form at any one time.

Copyright Standards New Zealand

(c) *Zone 3* Electrical equipment shall be suitable to withstand a minimum temperature of 125°C and the insulation of conductors shall be suitable to withstand a minimum temperature of 170°C.

6.5.4.3 *Wiring systems*

Wiring systems should be installed outside the zones, i.e. on the cold side of the thermal insulation.

If the wiring system is installed in Zone 1 or 3, i.e. on the warm side of the thermal insulation, it shall be heat-resistant, in accordance with Clause 6.5.4.2(c). Metallic sheaths and metallic conduits shall not be accessible in normal use.

NOTE: Examples of suitable wiring systems are insulated, unsheathed cables in non-metallic enclosures or sheathed cables.

6.5.4.4 *Socket-outlets, switches and other accessories*

Socket-outlets, switches and other accessories shall not be installed within a sauna room or enclosure.

Exception: Switches and other accessories that form part of the sauna heater may be located within the sauna room or enclosure.

6.5.4.5 *Sauna heating appliances*

Sauna heating appliances shall be installed in accordance with the manufacturer's instructions.

6.5.4.6 *Switchboards*

A switchboard shall not be installed within any classified zone.

auto login of Electrical Workers Licensing Group is licenced to temporarily download this document.
Electrical Workers Licensing Group may print this document but not more than 10% of the documents subscribed to may be held in printed form at any one time.

Copyright Standards New Zealand

auto login of Electrical Workers Licensing Group is licenced to temporarily download this document.
Electrical Workers Licensing Group may print this document but not more than 10% of the documents subscribed to may be held in printed form at any one time.

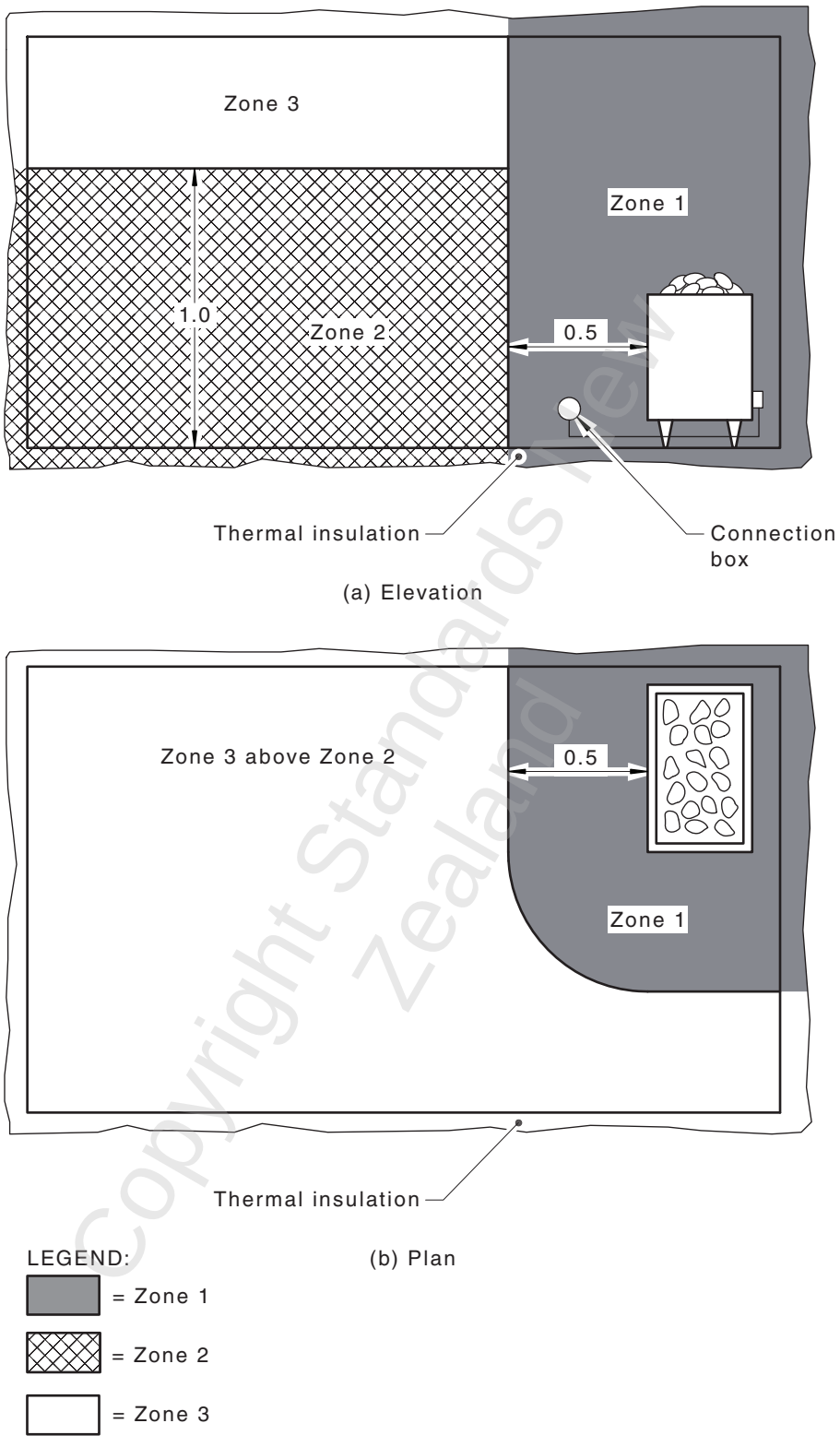

DIMENSIONS IN METRES

FIGURE 6.22 CLASSIFIED ZONES FOR SAUNA HEATERS

COPYRIGHT

6.6 REFRIGERATION ROOMS

6.6.1 Scope

The particular requirements of this Clause (Clause 6.6) apply to all of the area within refrigeration rooms, such as, freezers or cold rooms.

Due to the nature of these locations, certain methods of protection against electric shock are not permitted. Refer to Clause 6.6.2.2.

6.6.2 Protection against electric shock

6.6.2.1 *Use of SELV*

Where SELV is used, whatever the nominal voltage, basic protection shall be provided in accordance with Clause 7.5.5.

6.6.2.2 *Prohibited measures*

The following measures of protection against electric shock are prohibited and shall not be used:

(a) Protection by means of obstacles, in accordance with Clause 1.5.4.5.

(b) Protection by placing out of reach, in accordance with Clause 1.5.4.6.

6.6.3 Selection and installation of electrical equipment

6.6.3.1 *Degree of protection required*

Electrical equipment permitted to be installed within the refrigeration room shall have a degree of protection of at least IPX4B or IP24.

NOTE: See also Clause 6.7 regarding areas that are subjected to a sanitization or hosing-down process.

6.6.3.2 *Wiring systems*

6.6.3.2.1 *General*

The wiring system used for the supply, control and protection of electrical equipment within a refrigeration room shall be of a type that—

(a) will not be affected by the operating temperature of the room; and

(b) does not provide pockets or channels in which moisture might accumulate, or through which it might pass into electrical equipment.

Wiring systems not associated with the refrigeration room electrical equipment shall not be taken through, or be installed, in such rooms.

6.6.3.2.2 *Types permitted*

The following wiring systems are permitted:

(a) Unenclosed sheathed cables including served MIMS cables.

(b) Insulated, unsheathed or sheathed cables enclosed in a wiring enclosure that has adequate draining facilities.

Copyright Standards New Zealand

auto login of Electrical Workers Licensing Group is licenced to temporarily download this document.
Electrical Workers Licensing Group may print this document but not more than 10% of the documents subscribed to may be held in printed form at any one time.

(c) Other wiring systems that are not inferior to the systems described in Item (a) or Item (b).

NOTE: PVC insulated, unsheathed or sheathed cables may not be satisfactory for electrical installations in refrigerated rooms where the cables may be subjected to bending, flexing or vibration at temperatures below approximately 0°C. See Clause 3.3.2.1 and Table 3.2.

6.6.3.2.3 *Sealing*

The following shall be sealed with a compound that does not set hard:

(a) Each wiring enclosure at any point where it passes from a refrigerated to a non-refrigerated space.

(b) The point of entry of cables into motors, luminaires, switches or other electrical equipment.

6.6.3.3 *Socket-outlets, switches and other accessories*

Socket-outlets, switches and other accessories shall be designed such that provision is made to prevent the retention of moisture within their enclosure.

This requirement may be satisfied by the use of socket-outlets, switches and other accessories, and controlgear having the required degree of
A1 protection, in accordance with Clause 6.6.3.1, or Clause 6.7, as appropriate, that are permanently sealed.

6.6.3.4 *Luminaires, lampholders and other equipment*

6.6.3.4.1 *Luminaires*

Luminaires shall be permanently sealed to prevent the entry of liquid or vapour, or shall be designed and constructed so that—

(a) moisture cannot enter the lampholder and other components containing live parts; and

(b) provision is made to prevent the retention of moisture in or on the fitting.

6.6.3.4.2 *Lampholders*

Lampholders shall comply with the following:

(a) *Construction* Lampholders shall be—

(i) the all-insulated type; or

(ii) any other suitable type that precludes the possibility of any external metal portion becoming live.

(b) *Location* Lampholders shall not be suspended within 2.50 m of the floor or ground when on a flexible pendant.

6.6.3.5 *Fixed appliances and motors*

Fixed appliances shall be designed and constructed for the particular location and conditions.

COPYRIGHT

Copyright Standards New Zealand

auto login of Electrical Workers Licensing Group is licenced to temporarily download this document.
Electrical Workers Licensing Group may print this document but not more than 10% of the documents subscribed to may be held in printed form at any one time.

Electrical equipment enclosures shall have, or provide, a degree of protection suitable for the conditions in which the electrical equipment is installed.

This requirement is deemed to be satisfied by the provision of internal heaters in the appliance or enclosure that would prevent the retention of moisture.

6.6.3.6 *Heating elements in door seals*

Heating elements in refrigeration room door seals shall be provided with additional protection by an RCD with a fixed rated residual current not exceeding 30 mA.

6.6.3.7 *Switchboards*

A switchboard shall not be installed in a refrigeration room.

6.7 SANITIZATION AND GENERAL HOSING-DOWN OPERATIONS

6.7.1 Scope

The particular requirements of this Clause (Clause 6.7) apply to electrical installations where sanitization or general hosing-down operations are carried out.

Due to the nature of these locations, certain methods of protection against electric shock are not permitted. Refer to Clause 6.7.3.2.

NOTE: Electrical installations where the requirements of this Clause may apply include food production or processing areas and agricultural or horticultural premises, such as rooms, locations or areas where—

(a) livestock are kept;

(b) feed, fertilizers, vegetable or animal products are produced stored, prepared or processed;

(c) plants are grown, such as greenhouses or hydroponic installations;

(d) agricultural or horticultural products are produced, prepared or processed, e.g. dairies, and facilities for drying, stewing, pressing out, fermenting, butchering, meat processing, etc.; or

(e) car wash bays and the like are provided.

6.7.2 Classification of zone

The classified zone is based on the dimensions and limits of any location likely to be affected by hosing, as follows:

(a) Where the area is to be sanitized or hosed down throughout, the classified zone consists of the whole of the space between the floor, walls and ceiling, including any recess therein, enclosing the area.

(b) Where hosing-down is limited to the floor and walls, the classified zone consists of—

(i) any location within the space from the floor, or the base of a recess in the floor, to a horizontal plane 2.0 m above the floor;

COPYRIGHT

Copyright Standards New Zealand

auto login of Electrical Workers Licensing Group is licenced to temporarily download this document.
Electrical Workers Licensing Group may print this document but not more than 10% of the documents subscribed to may be held in printed form at any one time.

(ii) any wall within the area; and

(iii) any location on a ceiling that is within 1.0 m of a wall within the area.

(c) Where hosing-down is limited to the floor only, the classified zone consists of any location within the space from the floor, or the base of a recess in the floor, to a horizontal plane 1.0 m above the floor.

6.7.3 Protection against electric shock

6.7.3.1 *Use of SELV*

Where SELV is used, whatever the nominal voltage, basic protection shall be provided in accordance with Clause 7.5.5.

6.7.3.2 *Prohibited measures*

The following measures of protection against electric shock are prohibited and shall not be used:

(a) Protection by means of obstacles, in accordance with Clause 1.5.4.5.

(b) Protection by placing out of reach, in accordance with Clause 1.5.4.6.

6.7.4 Selection and installation of electrical equipment

6.7.4.1 *Degree of protection required*

Electrical equipment installed within the classified zone shall have a degree of protection of at least—

(a) IPX5 where low or medium pressure hosing-down is used; and

(b) IPX6 where high pressure hosing is used.

6.7.4.2 *Electrical equipment*

Electrical equipment, including the wiring system, used in the classified zone shall be of a type that—

(a) will not be affected by the method of hosing, materials used, temperature and pressure of the hosing medium;

(b) is protected against moisture that might accumulate; and

(c) does not provide channels or pockets through which moisture might pass into electrical equipment.

6.7.4.3 *Switchboards*

Switchboards installed in classified zones in locations subject to sanitization or hosing-down operations shall be provided with a minimum degree of protection of IPX6.

auto login of Electrical Workers Licensing Group is licenced to temporarily download this document.
Electrical Workers Licensing Group may print this document but not more than 10% of the documents subscribed to may be held in printed form at any one time.

Copyright Standards New Zealand

COPYRIGHT

SECTION 7 SPECIAL ELECTRICAL INSTALLATIONS

7.1 GENERAL

7.1.1 Application

This Section specifies the minimum requirements for the selection and installation of electrical equipment in special electrical installations, which shall be achieved to satisfy Part 1 of this Standard.

7.1.2 Selection and installation

The particular requirements for each special electrical installation replace or modify the general requirements of the other Sections of this Standard. Where this Section does not specify a requirement, the relevant requirements of other Sections of this Standard apply.

This Section applies to the following special electrical installations:

(a) Electrical systems for safety services.

(b) Electricity generation systems.

(c) Protection by electrical separation.

(d) Extra-low voltage electrical installations.

(e) High voltage electrical installations.

(f) Installations in areas where an explosive hazard may arise.

(g) Electrical installations of—

  (i) construction and demolition sites;

  (ii) electromedical treatment areas;

  (iii) transportable structures and vehicles and the sites from which they are supplied;

  (iv) marinas and recreational boats;

  (v) shows and carnivals;

  (vi) cold cathode illumination systems;

  (vii) telecommunication networks power supplies;

  (viii) cranes and hoists;

  (ix) lifts;

  (x) generating sets;

  (xi) outdoor sites under heavy conditions;

  (xii) electric fences; and

COPYRIGHT

Copyright Standards New Zealand

auto login of Electrical Workers Licensing Group is licenced to temporarily download this document.
Electrical Workers Licensing Group may print this document but not more than 10% of the documents subscribed to may be held in printed form at any one time.

(xiii) film, video and television sites.

7.2 SAFETY SERVICES

* **7.2.1 Scope and general**

7.2.1.1 *Scope*

The particular requirements of this Clause (Clause 7.2) apply to the electrical installation of building services that are essential for the safe operation of safety services consisting of fire detection, warning and extinguishing systems, smoke control systems, evacuation systems and the safety of persons using lifts.

7.2.1.2 *General*

These requirements are intended to ensure that electricity supply is not inadvertently disconnected from electrical equipment that is required to operate during emergency conditions.

Exceptions: The following need not comply with Clause 7.2:

1 Escalators or moving walkways (travelators).

2 A lift in a single private residence that is installed in accordance with AS/NZS 1735.18 need not comply with the requirements of this Clause (Clause 7.2).

3 Lifts that are not defined as emergency lifts in the National Construction Code (NCC) or New Zealand Building Code (NZBC).

4 Pumps for 'jacking' or water pressure maintenance, the failure of which does not deprive the fire hydrant or sprinkler pump of adequate water supply.

A1 5 *'***Text deleted***'.*

6 Smoke alarms installed in single private residences (see Clause 4.6 for information relating to smoke alarms).

NOTES:

1 AS/NZS 3009 provides guidance for emergency power supplies in hospitals.

2 The term 'safety services' incorporates equipment—

(a) described, and which could be labelled, as 'emergency systems' under the previous edition of this Standard; and

(b) determined as 'emergency equipment' in the NCC and 'essential service' in the NZBC.

(c) Fire-resistance level (FRL) is the grading periods in minutes determined in accordance with NCC for the following criteria:

(i) Structural adequacy—1st 120 = FRL—structural adequacy The ability to maintain stability and adequate load bearing capacity as determined by AS 1530.4.

and

COPYRIGHT

Copyright Standards New Zealand

auto login of Electrical Workers Licensing Group is licenced to temporarily download this document.
Electrical Workers Licensing Group may print this document but not more than 10% of the documents subscribed to may be held in printed form at any one time.

(ii) Integrity—2nd 120 = FRL—structural integrity The ability to resist the passage of flames and hot gases as specified by AS 1530.4. (See Figure 7.1, Clause 7.2.9.3.1 and Clause 7.2.10.4.1 for additional information.)

and

(iii) Insulation, and expressed in that order—3rd 120 = FRL—structural insulation The ability to maintain a temperature over the whole of the unexposed surface below that specified by AS 1530.4.

7.2.2 Supply systems

7.2.2.1 *General*

Wiring systems associated with safety services shall be capable of maintaining supply to electrical equipment when exposed to fire.

An electrical source for safety services shall not be used for purposes other than safety services unless the supply availability for safety services is not impaired.

When safety services are required to operate under emergency conditions or there is a loss of normal supply, it may be necessary to automatically disconnect supply from other non-essential equipment to provide sufficient capacity for the safety services.

A1 *Exception: This Clause does not apply to fire detection, alarm and intercom systems with battery backup complying with AS 1670 or NZS 4512.*

Copyright Standards New Zealand

auto login of Electrical Workers Licensing Group is licenced to temporarily download this document.
Electrical Workers Licensing Group may print this document but not more than 10% of the documents subscribed to may be held in printed form at any one time.

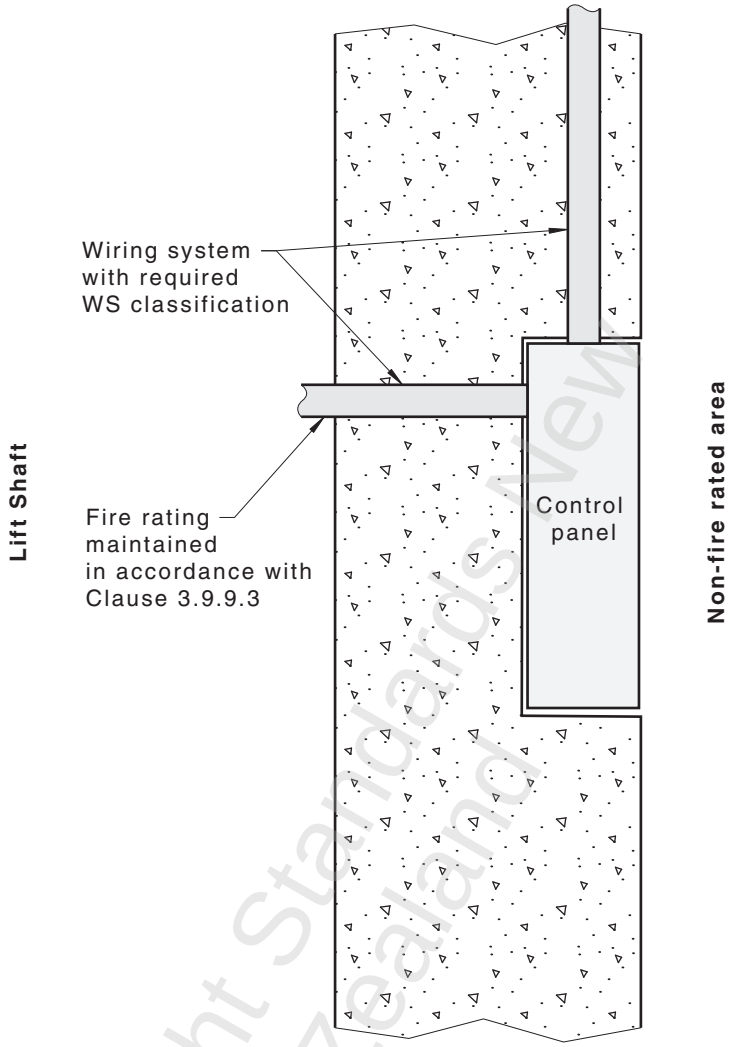

FIGURE 7.1 WIRING SYSTEM (WS) CLASSIFICATION REQUIRED FOR LIFT CIRCUITS

7.2.2.2 *Wiring systems (mains, submains, main switchboard and supplies to outbuildings)*

7.2.2.2.1 *WS classification provided*

Wiring systems, including their supports, supplying safety services consisting of—

(a) consumer mains;

(b) generator supplies;

(c) normal supplies;

(d) alternate supplies; and

(e) supplies to outbuildings, and fire isolated portions of buildings,

shall comply with AS/NZS 3013, with a WS classification as specified by the Standard relevant to the installation of such equipment.

COPYRIGHT

auto login of Electrical Workers Licensing Group is licenced to temporarily download this document.
Electrical Workers Licensing Group may print this document but not more than 10% of the documents subscribed to may be held in printed form at any one time.

Copyright Standards New Zealand

NOTE: See Appendix H for further information regarding the application of the WS classification system.

7.2.2.2.2 *WS classification is not provided*

Where the relevant Standard does not specify a WS classification, the wiring system shall be of a type that is—

(a) capable of maintaining supply to the equipment when exposed to either fire or mechanical damage; or

(b) capable of maintaining supply to the equipment when exposed to fire and protected against mechanical damage by—

  (i) installation in a suitable enclosure; or

  (ii) installation in a location where the system will not be exposed to mechanical damage.

Conductors supplying safety services shall—

(A) be physically separated from all other wiring systems by at least 50 mm horizontally or by suitable barriers [see Clause 3.9.8.1, Items (d) and (e)]; and

(B) be separated from all other safety services by at least 50 mm horizontally or by suitable barriers.

Conductors of different safety services shall not—

(1) be incorporated with each other within a multi-core cable; or

(2) with conductors of any other wiring system within a multi-core cable.

Where any WS cabling traverses environments that dictate different mechanical protection requirements, and it is neither viable nor practicable to change the degree of protection at the transition points, the installed cabling shall comply with the highest requirement of protection.

Exceptions: The fire protection requirements of mains, submains and supplies to outbuildings need not apply to the following:

1 Wiring systems installed in an enclosure or location that provides protection against fire and mechanical damage.

  Example: Cables or enclosed wiring systems installed in underground locations, buried in concrete or masonry walls or floors, or installed in appropriate fire-rated enclosure and provided with suitable mechanical protection.

2 Wiring systems installed that provide the primary power source for, emergency warning systems, fire detection and alarm systems that are provided with battery backup in accordance with the AS 1670 series or NZS 4512, up to the control and indicating panel.

3 Wiring systems installed for electric-driven fire pumps that form part of a pump set that includes a stand-by fuel-driven pump.

COPYRIGHT

auto login of Electrical Workers Licensing Group is licenced to temporarily download this document.
Electrical Workers Licensing Group may print this document but not more than 10% of the documents subscribed to may be held in printed form at any one time.

Copyright Standards New Zealand

4 Wiring systems installed for supplying battery chargers for battery-operated single-point lighting systems that are provided for emergency evacuation purposes.

7.2.2.3 *Alternative supply systems*

7.2.2.3.1 *Continued occupation*

Where an alternative supply is provided for continued safe occupation of the building, the following requirements apply:

(a) *Safety services* The alternative supply system shall have sufficient capacity to operate all safety services.

(b) *Continued occupation of any portion of the building (during loss of normal supply)* The alternative supply system shall have sufficient capacity to supply electrical equipment associated with the continued occupation of the building.

Generating sets and other independent sources of supply shall have sufficient capacity to supply all the safety services simultaneously. Allowance is required for motor start-up by plant sequencing or additional capacity for motor starting.

A dedicated alternative supply may be provided for electrical equipment other than (a) and (b).

NOTE: Examples may be for security purposes or preservation of business assets and stock, e.g. refrigeration.

7.2.2.3.2 *Fire management system*

Where a fire management system is incorporated, the fire management system controlling the nominated safety services shall be connected to the alternative supply and the alternative supply shall have sufficient capacity to supply all the nominated safety services required to operate in fire mode. There shall be allowance for motor start-up by plant sequencing or additional capacity for motor starting.

* **7.2.3 Main switchboard and switchgear**

7.2.3.1 *General*

A safety service shall be controlled by a main switch that is separate from main switches used to control—

(a) any part of the general electrical installation; and

(b) other types of safety services.

Main switchboards shall be installed in accordance with Clause 2.10 and the National Construction Code or the New Zealand Building Code.

NOTE: Typical examples of main switchboards with one and two normal supplies are shown in Figures 7.2(A) and 7.2(B) respectively.

Copyright Standards New Zealand

auto login of Electrical Workers Licensing Group is licenced to temporarily download this document.
Electrical Workers Licensing Group may print this document but not more than 10% of the documents subscribed to may be held in printed form at any one time.

7.2.3.2 *Switchgear*

Where safety services are installed, all switchboards that are required to sustain supply to safety services shall be constructed so that the safety services switchgear is separated from general switchgear by metal partitions designed to minimize the spread of a fault from the general switchgear to the safety services switchgear.

NOTE: A non-metallic case switchboard does not comply with this Clause.

7.2.3.3 *Cables in the same enclosure*

Conductors of safety services shall not be enclosed with conductors of different safety services or with conductors of any other system.

For the purposes of this Clause, the following applies:

(a) If a duct or trunking is divided into separate channels by means of fixed and continuous barriers that provide effective segregation, each channel may be regarded as a separate enclosure.

(b) Wiring systems complying with Clause 7.2.2.2 may be considered to provide effective segregation.

(c) Wiring systems within switchboards shall be separated from all other wiring systems by at least 50 mm or by effective barriers.

7.2.3.4 *Arrangement*

Where a supply isolating device is installed it shall be a load break switch or circuit-breaker.

Discrimination (selectivity) shall be achieved between all protective devices if the supply isolating device is a circuit-breaker.

NOTE: Some jurisdictions may have additional requirements for the isolating device, such as—

(a) capable of being locked on; and

(b) labelled for operation by authorized personnel only.

Electrical Workers Licensing Group is licenced to temporarily download this document.
auto login of Electrical Workers Licensing Group may print this document but not more than 10% of the documents subscribed to may be held in printed form at any one time.

Copyright Standards New Zealand

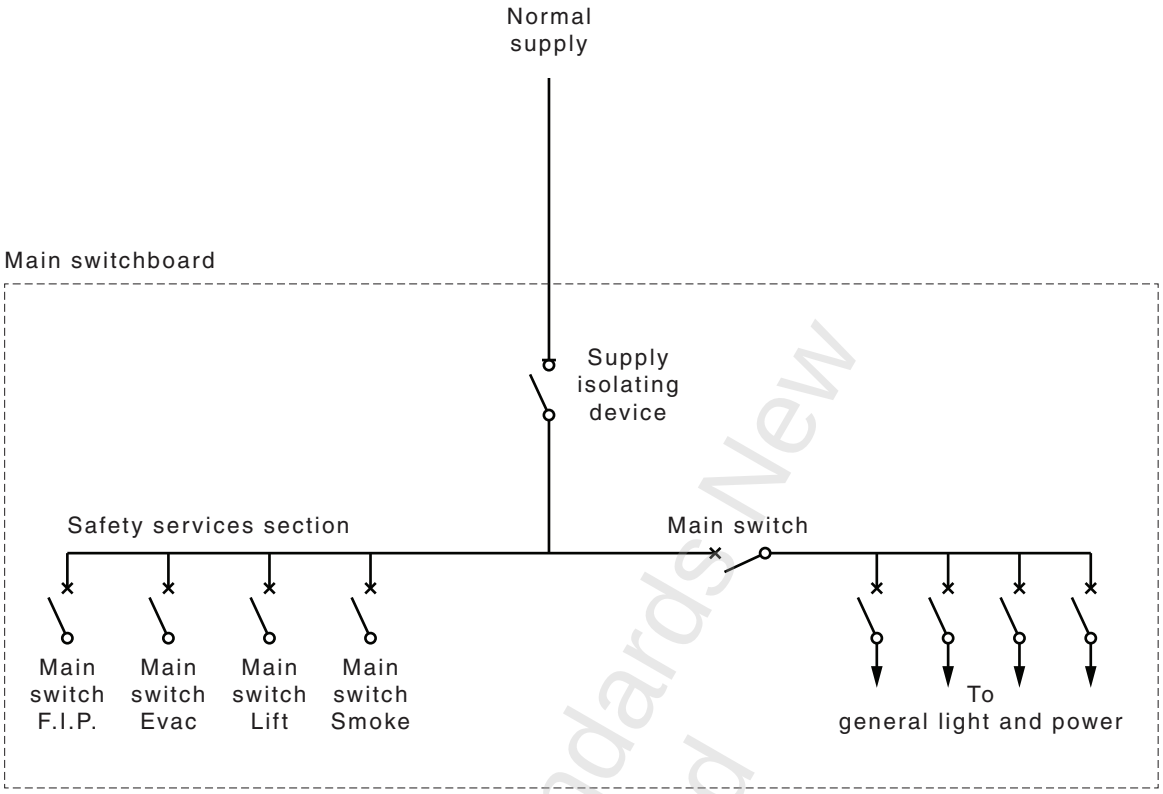

FIGURE 7.2(A) TYPICAL ARRANGEMENT OF MAIN SWITCHBOARD WITH ONE NORMAL SUPPLY

Copyright Standards New Zealand

auto login of Electrical Workers Licensing Group is licenced to temporarily download this document.
Electrical Workers Licensing Group may print this document but not more than 10% of the documents subscribed to may be held in printed form at any one time.

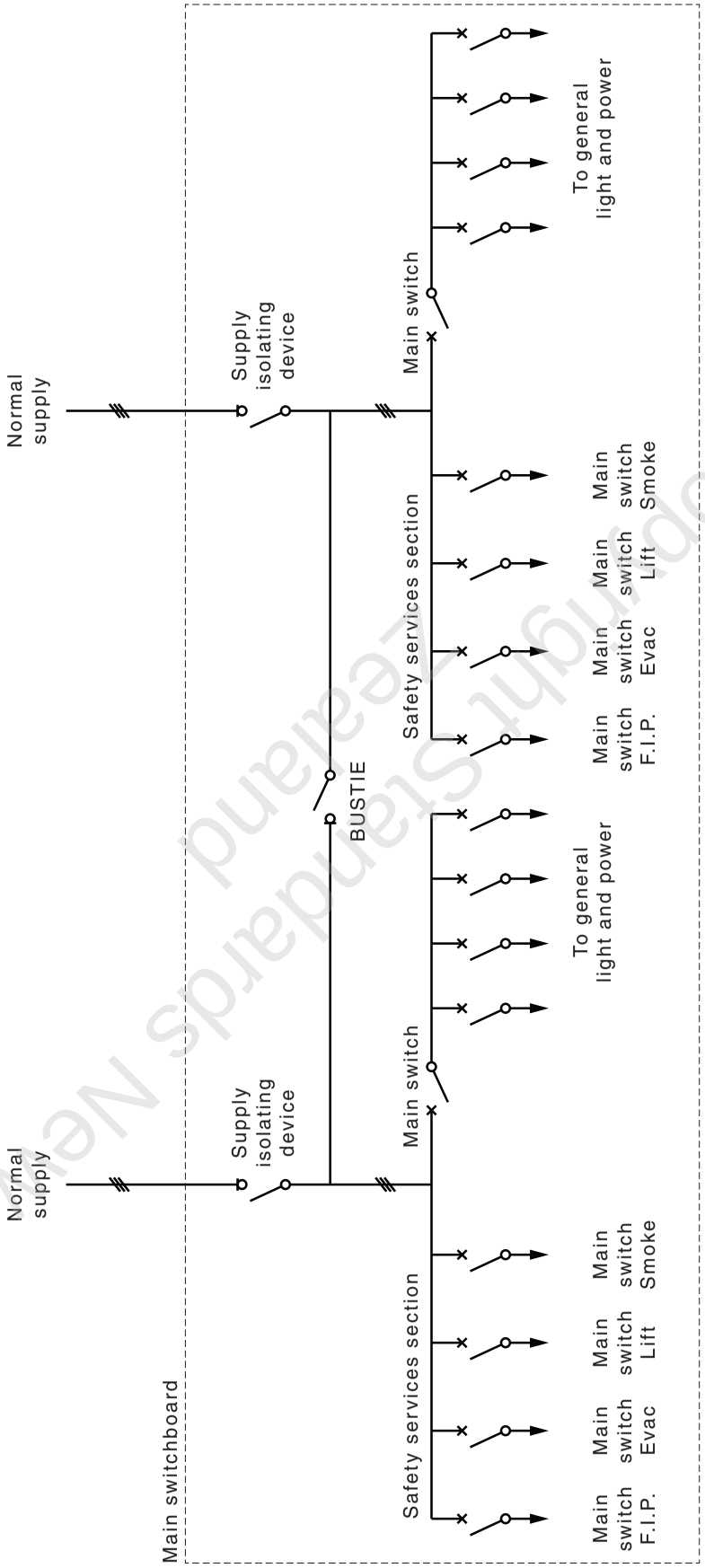

FIGURE 7.2(B) TYPICAL ARRANGEMENT OF MAIN SWITCHBOARD WITH TWO NORMAL SUPPLIES

COPYRIGHT

auto login of Electrical Workers Licensing Group is licenced to temporarily download this document.
Electrical Workers Licensing Group may print this document but not more than 10% of the documents subscribed to may be held in printed form at any one time.

7.2.3.5 *Discrimination (selectivity) of circuit-protective devices*

Protective devices shall be selected such that—

(a) a fault on one safety service will not result in loss of supply to other safety services; and

(b) a fault on the general electrical installation will not result in loss of supply to safety services.

Fault-current limiters used to protect safety services shall not be used to provide protection to any part of the general electrical installation.

Discrimination shall be arranged between protective devices for outgoing circuits and the upstream protective device. Refer to Clause 2.5.7.2.3.

*

7.2.4 Main switches

7.2.4.1 *General*

A safety service shall be controlled by a main switch that is separate from main switches used to control—

(a) any part of the general electrical installation; and

(b) other types of safety services.

Main switches shall be selected such that—

(i) a fault on one safety service will not result in loss of supply to other safety services; and

(ii) a fault on the general electrical installation will not result in loss of supply to safety services.

There is no limit to the number of main switches installed for the control of safety services.

An auto transfer switch (ATS) may be used as a main switch provided the ATS meets the requirements of Clause 2.3.3.

Fault-current limiters used to protect safety services shall not be used to provide protection to any part of the general electrical installation.

A1

7.2.4.2 *Arrangement of main switches*

Main switches for safety services shall—

(a) be connected on the supply side of all general electrical installation main switches;

(b) not be subject to the control of any general electrical installation main switch; and

(c) control only electrical equipment that is regarded as safety services.

auto login of Electrical Workers Licensing Group is licenced to temporarily download this document.
Electrical Workers Licensing Group may print this document but not more than 10% of the documents subscribed to may be held in printed form at any one time.

Copyright Standards New Zealand

Exception: This requirement need not apply to the following:

1 *A high voltage switch, controlling the supply to a low voltage switchboard that is not regarded as a general electrical installation main switch.*

2 *A low voltage switch capable of operation only by authorized persons and marked accordingly. Locking-on of a switch is regarded as a means of ensuring that it is subject to operation only by authorized persons.*

A1 3 *Safety services that are installed in an individual outbuilding, combined outbuilding or a fire separated portion of a building, in accordance with Clauses 7.2.4.5 and 7.2.4.6.*

4 *Automatic fire detection, alarm and intercom systems or sound and intercom systems for emergency purposes that are—*

- *supplied from the supply side of a distribution board not more than one distribution board removed from the main switchboard; and*
- *marked in accordance with Clause 7.2.4.4; and*
- *provided with a secondary power source, in accordance with the AS 1670 series or NZS 4512.*

7.2.4.3 *Mechanical protection*

Switches and control equipment that are part of a safety service installation shall be adequately protected if they may be subject to mechanical damage because of their location or condition of use.

7.2.4.4 *Identification*

All switches operating in the supply circuit to safety services shall be clearly identified to indicate the safety service they control.

Main switches controlling safety services shall be—

(a) identified as 'MAIN SWITCH' and indicate the safety service equipment they control (in uppercase);

(b) marked 'IN THE EVENT OF FIRE, DO NOT SWITCH OFF' (in uppercase); and

(c) identified by contrasting colouring or other suitable means, in accordance with Clause 2.3.3.4.

7.2.4.5 *Electrical installations in outbuildings*

A switch for safety services that is installed on the switchboard in an outbuilding shall be regarded as a main switch, in accordance with Clause 7.2.4.

A safety service main switch installed in an outbuilding shall be clearly identified in accordance with Clause 7.2.4.4.

COPYRIGHT

auto login of Electrical Workers Licensing Group is licenced to temporarily download this document.
Electrical Workers Licensing Group may print this document but not more than 10% of the documents subscribed to may be held in printed form at any one time.

Copyright Standards New Zealand

Any switch that—

(a) is located remote from an outbuilding in which safety services are provided; and

(b) operates in the supply circuit to a safety service main switch installed in the outbuilding,

shall be clearly identified in accordance with Clause 7.2.4.4(b) and (c).

7.2.4.6 *Fire separated portions of a building*

Any switch for the control of safety services installed in a fire separated portion of a building and provided on the switchboard within the fire separated portions of a building shall be regarded as a main switch and shall be arranged in accordance with Clause 7.2.4.

Portions of a structure that are separated from any other part of the building by a fire-resistance level (FRL) of at least 120/120/120, in accordance with national building codes, may be regarded as a separate building for the purposes of this Clause.

Any switch installed for the control of safety services in a fire-separated portion of a building or structure that is regarded as a separate building shall be separate from switches used to control—

(a) any part of the general electrical installation; and

(b) other types of safety services.

* **7.2.5 Fire pumps and fire pump control equipment**

7.2.5.1 ***General***

Fire pumps and fire pump control equipment shall include the following items and electrical equipment:

(a) Fire hydrant booster pumps.

(b) Pumps for automatic sprinkler systems, water spray or deluge systems and similar fire extinguishing systems.

(c) Pumps for fire-hose reels, where such hose reels form the sole means of fire protection, i.e. where fire hydrants and automatic fire-sprinkler systems are not installed.

(d) Fire pump control equipment and wiring systems.

(e) Fire pump rooms.

In addition to Items (a) to (e) above, there may exist other fire and smoke control equipment not listed.

A1 *Exception: The requirements of Clause 7.2 need not apply to electrical equipment, the failure of which does not affect the operation of safety services.*

Copyright Standards New Zealand

auto login of Electrical Workers Licensing Group is licenced to temporarily download this document.
Electrical Workers Licensing Group may print this document but not more than 10% of the documents subscribed to may be held in printed form at any one time.

A1 *Examples include but are not limited to the following:*

(a) Pumps for jacking and jockey pressure maintenance, the failure of which does not deprive the fire hydrant, sprinkler, or hose reel pump of adequate water supply.

(b) Circuits of diesel driven fire pump controllers arranged in accordance with the electrical requirements of AS 2941.

NOTE: Attention is drawn to the requirements for—

(a) fire pumps in the AS 2118 series, AS 2419.1 and AS 2941 or NZS 4515, NZS 4517 and NZS 4541; and

(b) automatic sprinkler systems in the AS 2118 series or NZS 4541.

7.2.5.2 *Wiring systems supplying fire pumps and fire pump control equipment*

7.2.5.2.1 *Types of wiring systems*

Wiring systems supplying fire pumps and fire pump control equipment shall comply with AS/NZS 3013 with a WS classification as specified by the Standard relevant to the installation of such equipment.

NOTE: See Appendix H for further information regarding the application of the WS classification system.

Where the relevant Standard does not specify a WS classification, the wiring system shall be of a type that is—

(a) capable of maintaining supply to the equipment when exposed to either fire or mechanical damage; or

(b) capable of maintaining supply to the equipment when exposed to fire and protected against mechanical damage by—

(i) installation in an effective enclosure; or

(ii) installation in a location where the system will not be exposed to mechanical damage.

Exception: The fire and mechanical protection requirements specified in Items (a) and (b) above need not apply to the following:

1 Wiring systems in an enclosure or location that provides protection against fire and mechanical damage.

Example: Cables or enclosed wiring systems installed in underground locations, buried in concrete or masonry walls or floors, or installed in a fire-rated enclosure and provided with effective mechanical protection.

2 Wiring systems installed for electric-driven fire pumps that form part of a pump set that includes a stand-by fuel-driven pump.

Copyright Standards New Zealand

auto login of Electrical Workers Licensing Group is licenced to temporarily download this document.
Electrical Workers Licensing Group may print this document but not more than 10% of the documents subscribed to may be held in printed form at any one time.

7.2.5.2.2 *Segregation of cables*

Conductors supplying fire pumps and fire pump control equipment shall not be enclosed with conductors of different safety services or with conductors of any other system.

For the purposes of this Clause, the following applies:

(a) If a duct or trunking is divided into separate channels by means of fixed and continuous barriers that provide effective segregation, each channel may be regarded as a separate enclosure.

(b) Wiring systems complying with Clause 7.2.2.2 may be considered to provide effective segregation.

(c) Wiring systems within switchboards shall be physically separated from all other wiring systems by at least 50 mm or by effective barriers.

(d) Conductors of different safety services shall not be incorporated with each other within a multi-core cable or with incorporated with conductors of any other wiring system within a multi-core cable.

7.2.5.3 *Switchgear for fire pumps and fire pump control equipment*

Where emergency equipment is required by national building codes, all switchboards that sustain supply to such equipment shall be constructed so that the emergency equipment switchgear is separated from other switchgear by metal partitions designed to minimize the spread of a fault from the other switchgear to the emergency switchgear.

7.2.5.4 *Interposing switches for fire pumps and fire pump control equipment*

No switch shall be interposed between a main switch and downstream switchboards supplying fire pumps and fire pumps control equipment.

7.2.5.5 *Pump rooms for fire pumps and fire pump control equipment*

In rooms used essentially to house fire hydrant or sprinkler pumps, lighting equipment and socket-outlets may be connected as a final subcircuit to the circuit supplying the pump equipment, provided that—

(a) the final subcircuit is protected against any overcurrent, in accordance with Clause 2.5;

(b) the final subcircuit is protected by an RCD with a fixed rated residual current not exceeding 30 mA; and

(c) the wiring system between the pump equipment circuit and such final subcircuit protective device complies with—

  (i) the current-carrying capacity and installation requirements of Clause 2.5.3.1; and

  (ii) the type and segregation requirements of Clauses 7.2.5.2.2 and 7.2.5.3.

auto login of Electrical Workers Licensing Group is licenced to temporarily download this document.
Electrical Workers Licensing Group may print this document but not more than 10% of the documents subscribed to may be held in printed form at any one time.

Copyright Standards New Zealand

Exception: Circuits for lighting and socket-outlets in pump rooms installed in accordance with Clause 7.2.5.2.1. The wiring system between the final subcircuit protective device and the lighting equipment or sockets-outlets need not comply with the requirements of Clause 7.2.5.2.2.

7.2.5.6 *Fire-pump motors*

7.2.5.6.1 *Isolating switches for fire-pump motors*

Where fire-pump motors are automatically controlled, a manually operated isolating switch shall be connected on the supply side of the pump motor.

The isolating switch shall—

A1 (a) comply with the requirements of Clauses 2.3.2 and 2.3.6; and

(b) be installed adjacent to the pump motor; and

(c) be provided with a device for locking the switch in the closed position.

7.2.5.6.2 *Overcurrent protection for fire-pump motors*

The overload characteristics of overcurrent protective devices provided on circuits supplying fire-pump motors shall—

(a) have an inverse time characteristic; and

(b) be rated, or in the case of circuit-breakers be set to—

(i) carry 125% of the full-load motor current continuously; and

(ii) open the circuit in not less than 20 s at 600% of the full-load motor current.

No other overload protective device shall be inserted between the pump motor controller and the motor.

Where more than one motor is provided on the same circuit, the overcurrent protective device may be rated or set to—

(A) carry 125% of the sum of the full-load current of all motors operating simultaneously; and

(B) open the circuit in not less than 20 s at 600% of the full-load current of the largest motor supplied.

7.2.5.6.3 *Overtemperature protection for fire-pump motors*

Overtemperature protective devices shall not be provided on fire-pump motors where the operation of such devices might reduce the operating time of the equipment under emergency conditions.

7.2.5.6.4 *Control circuits for fire-pump motors*

Control circuits associated with the operation of fire-pump motors shall—

(a) be directly connected between the active and neutral conductor of the pump circuit;

COPYRIGHT

Electrical Workers Licensing Group may print this document but not more than 10% of the documents subscribed to may be held in printed form at any one time.
auto login of Electrical Workers Licensing Group is licenced to temporarily download this document.

Copyright Standards New Zealand

NOTE: This requirement precludes the use of transformers.

(b) be arranged so that the active conductor of the control circuit is directly connected to the coil of the operating device within the starter; and

(c) not be provided with overload protective devices other than those provided for the pump-motor circuit, in accordance with Clause 7.2.5.6.2. This arrangement requires the installation of a switch in the neutral conductor of the control circuit for a fire pump.

A1

*

7.2.6 Fire and smoke detection equipment and fire alarm systems

7.2.6.1 *General*

Fire and smoke detection and alarm systems shall include:

(a) Fire and smoke detection equipment.

(b) Fire indicator panels.

(c) Fire and smoke alarm systems.

(d) Warning and intercom systems.

7.2.6.2 *Wiring systems for fire detection and alarm systems*

7.2.6.2.1 *Types of wiring systems for fire detection and alarm systems*

Wiring systems supplying fire detection and alarm systems shall comply with AS/NZS 3013 with a WS classification as specified by the Standard relevant to the installation of such equipment.

NOTE: See Appendix H for further information regarding the application of the WS classification system.

Where the relevant Standard does not specify a WS classification, the wiring system shall be of a type that is—

(a) capable of maintaining supply to the equipment when exposed to either fire or mechanical damage; or

(b) capable of maintaining supply to the equipment when exposed to fire and protected against mechanical damage by—

(i) installation in an effective enclosure; or

(ii) installation in a location where the system will not be exposed to mechanical damage.

Exception: The fire and mechanical protection requirements specified in Items (a) and (b) above need not apply to the following:

1 Wiring systems installed in an enclosure or location that provides protection against fire and mechanical damage.

Example: Cables or enclosed wiring systems installed in underground locations, buried in concrete or masonry walls or floors, or installed in an appropriate fire-rated enclosure and provided with effective mechanical protection.

COPYRIGHT

Copyright Standards New Zealand

auto login of Electrical Workers Licensing Group is licenced to temporarily download this document.
Electrical Workers Licensing Group may print this document but not more than 10% of the documents subscribed to may be held in printed form at any one time.

2 *Circuits that provide the primary power source of fire detection and alarm systems that are provided with battery backup in accordance with the AS 1670 series or NZS 4512, up to the control and indicating panel.*

3 *Circuits of emergency warning systems complying with the AS 1670 series or NZS 4512, beyond the main equipment panel.*

7.2.6.2.2 *Segregation of cables for fire detection and alarm systems*

Conductors of fire detection and alarm systems shall not be enclosed with conductors of different safety services or with conductors of any other system.

For the purposes of this Clause, the following applies:

(a) If a duct or trunking is divided into separate channels by means of fixed and continuous barriers that provide effective segregation, each channel may be regarded as a separate enclosure.

(b) Wiring systems for fire and smoke detection and fire alarm systems shall be physically separated from all other wiring systems by at least 50 mm or by effective barriers.

(c) Conductors of different fire and smoke detection and fire alarm systems shall not be incorporated with each other within a multi-core cable or incorporated with conductors of any other wiring system within a multi-core cable.

7.2.6.3 *Interposing switches for fire detection and alarm systems*

No switch shall be interposed between a main switch and downstream switchboards supplying fire and smoke detection and fire alarm systems.

* **7.2.7 Air-handling systems**

7.2.7.1 *General*

Air-handling systems intended to exhaust and control the spread of fire and smoke are safety services.

7.2.7.2 *Wiring systems for air-handling systems*

7.2.7.2.1 *Types of wiring system for air-handling systems*

Wiring systems supplying air-handling systems shall comply with AS/NZS 3013 with a WS classification as specified by the Standard relevant to the installation of such equipment.

NOTE: See Appendix H for further information regarding the application of the WS classification system.

Where the relevant Standard does not specify a WS classification, the wiring system shall be of a type that is—

(a) capable of maintaining supply to the equipment when exposed to either fire or mechanical damage; or

COPYRIGHT

Electrical Workers Licensing Group is licenced to temporarily download this document.
auto login of Electrical Workers Licensing Group may print this document but not more than 10% of the documents subscribed to may be held in printed form at any one time.

Copyright Standards New Zealand

(b) capable of maintaining supply to the equipment when exposed to fire and protected against mechanical damage by—

(i) installation in an effective enclosure; or

(ii) installation in a location where the system will not be exposed to mechanical damage.

Exception: The fire and mechanical protection requirements specified in Items (a) and (b) above need not apply to the following:

Wiring systems in an enclosure or location that provides protection against fire and mechanical damage.

Example: Cables or enclosed wiring systems installed in underground locations, buried enclosed in concrete or masonry walls or floors, or installed in an appropriate fire-rated enclosure and provided with effective mechanical protection.

7.2.7.2.2 *Segregation of cables for air-handling systems*

Conductors supplying air-handling systems shall not be enclosed with different safety services or with conductors of any other system.

For the purposes of this Clause, the following applies:

(a) If a duct or trunking is divided into separate channels by means of fixed and continuous barriers that provide effective segregation, each channel may be regarded as a separate enclosure.

(b) Wiring systems of air-handling systems shall be physically separated from all other wiring systems by at least 50 mm or by effective barriers.

(c) Conductors of different safety services shall not be incorporated with each other within a multi-core cable or incorporated with conductors of any other wiring system within a multi-core cable.

7.2.7.2.3 *Interposing switches for air-handling systems*

No switch shall be interposed between a main switch and downstream switchboards supplying air-handling systems.

* **7.2.8 Evacuation equipment**

7.2.8.1 *General*

Evacuation equipment shall include sound systems and intercom systems for emergency purposes compliant with AS 1670.4.

NOTE: Emergency evacuation lighting requirements are provided for in the National Construction Code or New Zealand Building Code.

7.2.8.2 *Wiring systems for evacuation equipment*

7.2.8.2.1 *Types of wiring system for evacuation equipment*

Wiring systems, supplying evacuation equipment shall comply with AS/NZS 3013 with a WS classification as specified in AS 1670.4.

COPYRIGHT

auto login of Electrical Workers Licensing Group is licenced to temporarily download this document.
Electrical Workers Licensing Group may print this document but not more than 10% of the documents subscribed to may be held in printed form at any one time.

Copyright Standards New Zealand

NOTE: See Appendix H for further information regarding the application of the WS classification system.

Exception: The fire and mechanical protection requirements specified above need not apply to the following:

1 *Wiring systems in an enclosure or location that provides protection against fire and mechanical damage.*

Example: Cables or enclosed wiring systems installed in underground locations, buried in concrete or masonry walls or floors, or installed in an appropriate fire-rated enclosure and provided with an effective mechanical protection.

2 *Supply to emergency warning systems that are provided with battery backup, in accordance with the AS 1670.4 or NZS 4512, up to the main equipment panel.*

7.2.8.2.2 *Segregation of cables for evacuation equipment*

Conductors supplying evacuation equipment shall not be enclosed with different safety services or with conductors of any other system.

For the purposes of this Clause, the following applies:

(a) If a duct or trunking is divided into separate channels by means of fixed and continuous barriers that provide effective segregation, each channel may be regarded as a separate enclosure.

(b) Wiring systems of evacuation equipment shall be physically separated from all other wiring systems by at least 50 mm or by effective barriers.

(c) Conductors of different safety services shall not be incorporated with each other within a multi-core cable or be incorporated with conductors of any other wiring system within a multi-core cable.

7.2.8.3 *Interposing switches for evacuation equipment*

No switch shall be interposed between a main switch and downstream switchboards supplying evacuation equipment.

* **7.2.9 Emergency lifts**

7.2.9.1 *General*

7.2.9.1.1 *In Australia* **A**

In Australia only, lifts deemed to be emergency lifts by the NCC are safety services. Although compliance with the AS 1735 series is not a requirement of this Standard, regulatory authorities may require compliance and may have additional requirements.

7.2.9.1.2 *In New Zealand* **NZ**

In New Zealand only, lifts required to operate for firefighting or other emergency purposes are safety services.

COPYRIGHT

auto login of Electrical Workers Licensing Group is licenced to temporarily download this document.
Electrical Workers Licensing Group may print this document but not more than 10% of the documents subscribed to may be held in printed form at any one time.

Copyright Standards New Zealand

auto login of Electrical Workers Licensing Group is licenced to temporarily download this document.
Electrical Workers Licensing Group may print this document but not more than 10% of the documents subscribed to may be held in printed form at any one time.

7.2.9.2 *Control and protection*

Each lift or each group of lifts that is specifically required to operate for firefighting or other emergency purposes shall be controlled and protected independently of all other lifts.

Main switches controlling lifts, arranged in accordance with Clause 7.2.4, shall be identified in accordance with the requirements of Clause 7.2.4.4 and distinguished from main switches controlling other lifts.

7.2.9.3 *Wiring systems for emergency lifts*

7.2.9.3.1 *Types of wiring system for emergency lifts*

Wiring systems supplying emergency lifts shall comply with AS/NZS 3013 with a WS classification as specified by the Standard relevant to the installation of such equipment (see Figure 7.1).

NOTE: See Appendix H for further information regarding the application of the WS classification system.

Where the Australian, New Zealand or Australian/New Zealand Standard does not specify a WS classification, the wiring system shall be of a type that is—

(a) capable of maintaining supply to the equipment when exposed to either fire or mechanical damage; or

(b) capable of maintaining supply to the equipment when exposed to fire and that is protected against mechanical damage by—

  (i) installation in an effective enclosure; or

  (ii) installation in a location where the system will not be exposed to mechanical damage.

Exceptions: The fire and mechanical protection requirements specified in Items (a) and (b) above need not apply to the following:

1 Wiring systems in an enclosure or location that provides protection against fire and mechanical damage.

Example: Wiring systems installed in underground locations, buried in concrete or masonry walls or floors, or installed in an appropriate fire-rated enclosure and provided with effective mechanical protection.

2 Circuits supplying lifts beyond the terminals of a circuit-breaker provided in the lift machine room for the control and protection of the lift installation.

7.2.9.3.2 *Segregation of cables*

Conductors supplying lifts shall not be enclosed with different safety services or with conductors of any other system.

COPYRIGHT

For the purposes of this Clause, the following applies:

(a) If a duct or trunking is divided into separate channels by means of fixed and continuous barriers that provide effective segregation, each channel may be regarded as a separate enclosure.

A1 (b) Wiring systems complying with Clause 7.2.2 may be considered to provide effective segregation.

(c) Conductors of different safety services shall not be incorporated with each other within a multi-core cable or be incorporated with conductors of any other wiring system within a multi-core cable.

7.2.9.4 *Interposing switches*

No switch shall be interposed between a main switch for lifts and downstream lift switchboards.

Exceptions: This requirement need not apply to the following:

1 Where an alternative supply system is provided in accordance with Clause 7.2.2.3.1.

2 To switches located remote from the building for which the safety services are provided, e.g. upstream switches supplying an outbuilding or fire separated portion of a building.

7.2.9.5 *Switchgear*

Where emergency equipment is required by national building codes, all switchboards that sustain supply to such equipment shall be constructed so that the emergency equipment switchgear is separated from other switchgear by metal partitions designed to minimize the spread of a fault from the other switchgear to the emergency switchgear.

* **7.2.10 Emergency motor-room-less lifts**

7.2.10.1 ***General***

Lifts classified as motor-room-less lifts (MRLs) are lifts that due to their design have no need for a traditional lift motor room.

An MRL switchboard shall comply with the requirements of Clause 2.10.

MRLs that are—

(a) fitted for the evacuation of persons in an emergency from a building; or

(b) installed to facilitate the activities of the fire brigade and other emergency services personnel; or

(c) designated emergency lifts in the design,

shall comply with the additional installation requirements of this Clause.

auto login of Electrical Workers Licensing Group is licenced to temporarily download this document.
Electrical Workers Licensing Group may print this document but not more than 10% of the documents subscribed to may be held in printed form at any one time.

Copyright Standards New Zealand

NOTE: Regulatory authorities may have additional requirements.

7.2.10.2 *Switchboards*

An MRL switchboard shall not be located in the lift shaft.

A switchboard located remote from the main switchboard and dedicated to supplying individual MRL switchboards shall be readily accessible and enclosed in a fire rated room or enclosure.

7.2.10.3 *Switchgear*

An MRL switchboard shall be located in a readily accessible position in accordance with Clause 2.10.

An MRL switchboard that penetrates through into the lift shaft shall
A1 maintain the fire rating in accordance with Clause 3.9.9.3(a)(iii).

7.2.10.4 *Wiring systems*

7.2.10.4.1 *Types of wiring systems for MRL lifts*

Wiring systems supplying MRLs shall comply with AS/NZS 3013 with a WS classification as specified by the Standard relevant to the installation of such equipment (see Figure 7.1).

NOTE: See Appendix H for further information regarding the application of the WS classification system.

Where the Australian, New Zealand or Australian/New Zealand Standard does not specify a WS classification, the wiring system shall be of a type that is—

(a) capable of maintaining supply to the equipment when exposed to either fire or mechanical damage; or

(b) capable of maintaining supply to the equipment when exposed to fire and that is protected against mechanical damage by—

  (i) installation in an effective enclosure; or

  (ii) installation in a location where the system will not be exposed to mechanical damage.

Exception: The fire and mechanical protection requirements specified in Items (a) and (b) above need not apply to wiring systems in an enclosure or location that provides protection against fire and mechanical damage. For example, wiring systems installed in underground locations, buried in concrete or masonry walls or floors, or installed in an appropriate fire-rated enclosure and provided with effective mechanical protection.

7.2.10.4.2 *Segregation of cables*

Conductors supplying MRL lifts shall not be enclosed with different safety services or with conductors of any other system.

auto login of Electrical Workers Licensing Group is licenced to temporarily download this document.
Electrical Workers Licensing Group may print this document but not more than 10% of the documents subscribed to may be held in printed form at any one time.

Copyright Standards New Zealand

For the purposes of this Clause, the following applies:

(a) If a duct or trunking is divided into separate channels by means of fixed and continuous barriers that provide effective segregation, each channel may be regarded as a separate enclosure.

A1 (b) Wiring systems complying with Clause 7.2.2 may be considered to provide effective segregation.

(c) Conductors of different safety services shall not be incorporated with each other within a multi-core cable or be incorporated with conductors of any other wiring system within a multi-core cable.

7.3 ELECTRICITY GENERATION SYSTEMS

7.3.1 General

The particular requirements of this Clause (Clause 7.3) supplement or amend the requirements of Sections 2 to 7 of this Standard for electricity generation systems connected to electrical installations that are intended to supply, either continuously or occasionally, all or part of the installation, including co-generation.

An electricity generation system may consist of the following:

(a) *Alternative and supplementary supply* A generator set, typically combustion engine-driven, that—

(i) provides an alternative or stand-by a.c. electricity supply in the event of failure of the normal power supply to the installation; or

(ii) is used as the primary power supply to an electrical installation; or

(iii) is used as part of a stand-alone power system.

* (b) *Stand-alone power system* A system that is not connected to the power distribution system of a network provider. Stand-alone systems may be supplied with power from one or more of the following:

(i) Photovoltaic array.

(ii) Wind turbine or mini-hydro turbine.

(iii) Engine driven generator set in the form of an a.c. supply or a d.c. supply.

(c) *Inverter system* An inverter system that provides an a.c. power supply from an interactive inverter using a renewable energy source, such as photovoltaic, wind turbine or mini-hydro turbine.

In the event of the renewable energy output available exceeding the electrical installation load, subject to formal approval of the electricity distributor, any surplus energy available is exported into the distribution system.

Electrical Workers Licensing Group is licenced to temporarily download this document.
auto login of Electrical Workers Licensing Group may print this document but not more than 10% of the documents subscribed to may be held in printed form at any one time.

Copyright Standards New Zealand

If the output available from the renewable energy sources is insufficient for the installation loading, the shortfall in energy required is imported from the network.

The interactive inverter of the system also provides control of the exporting and importing of energy from the system and network.

(d) *Battery system* A battery system that provides supply from an alternative energy source, such as a generator set, photovoltaic array, wind turbine or mini-hydro turbine, to charge a battery bank and provide a d.c. supply to an electrical installation.

7.3.2 Selection and installation of system

The selection, installation and control of electrical equipment that is intended to form an electricity system shall comply with the following Standards:

(a) Engine-driven generating sets..... AS/NZS 3010.

(b) Stand-alone power systems ..... AS/NZS 4509 (series).

A1 (c) Battery systems .....AS 3011 (series) and AS/NZS 5139.

(d) Photovoltaic array systems ..... AS/NZS 5033.

(e) Inverter systems ..... AS/NZS 4777 (series).

7.3.3 Control

An electricity generation system shall be controlled by a main switch or switches at the installation switchboard to which the connection of the electricity generation system is made.

The electricity generation system shall be controlled by switches or devices suitable for starting and stopping the electricity generation system. Where there is more than one switch or device for this purpose, they shall be grouped together and clearly identified.

An electricity generation system shall be so arranged that it cannot supply energy upstream of the point of connection to the installation either directly or indirectly.

Exception: An electricity distributor may enter into a formal agreement to permit co-generation (feedback or exporting into the upstream network) under specific conditions.

Examples include grid-connected inverter-based systems or engine-driven generating systems intended to operate in parallel with the network.

NOTE: Conditions for the connection of grid-connected systems, co-generation and other systems that are intended to operate in parallel with the electricity distributor's system are beyond the scope of this Standard.

auto login of Electrical Workers Licensing Group is licenced to temporarily download this document.
Electrical Workers Licensing Group may print this document but not more than 10% of the documents subscribed to may be held in printed form at any one time.

Copyright Standards New Zealand

7.3.3.1 *Basic protection and fault protection*

* Provision shall be made to ensure that all necessary connections for basic and fault protection in the installation, such as the MEN connection, remain intact when supply is available from the output of the electricity generation system.

7.3.4 Isolation

7.3.4.1 *General*

* **An inverter or regenerative supply source shall not be connected downstream of the generating set changeover device.**

Exception: This requirement need not apply where control systems prevent backfeed to the generator.

Each electricity generation system shall be provided with an isolating switch, in accordance with Clause 2.3.2.2. The following applies:

(a) The isolating switch shall be—

(i) installed adjacent to, or on, the electricity generation system so that a person operating the switch has a clear view of any person working on the electricity generation system; or

(ii) provided with a means of securing the device in the isolated position that requires a deliberate action to engage or disengage.

A1 *and*

(b) The isolating switch may be combined with overcurrent protection required by Clause 7.3.5.1.

A1 *and*

(c) The isolating switch shall comply with Clause 4.13 when the electricity generation system incorporates an electric motor.

A1 *and*

(d) The isolating switch shall be under manual control only.

A1 *and*

(e) The isolating switch shall not be capable of being overridden or bypassed by programmable control systems or the like.

A2 *Exception: The requirements for isolation locations detailed in this Clause may be varied in other related Standards.*

7.3.4.2 *Electricity generation systems incorporating batteries*

Where batteries are incorporated in an electricity generation system, a switch capable of interrupting the supply from such batteries shall be installed adjacent to the batteries and shall be clearly identified to indicate its purpose.

Electrical Workers Licensing Group may print this document but not more than 10% of the documents subscribed to may be held in printed form at any one time.
auto login of Electrical Workers Licensing Group is licenced to temporarily download this document.

Copyright Standards New Zealand

A single switch that incorporates both a.c. and d.c. switching functions outlined in Clause 7.3.4.1 and this Clause (Clause 7.3.4.2) may be used.

7.3.5 Overcurrent protection

7.3.5.1 *Electricity generation system protection*

* Electricity generation systems shall be provided with overcurrent protection, in line with the applicable Australian, New Zealand or Australian/New Zealand Standard for the particular generating system. Where the relevant Standard does not specify overcurrent requirements, then the following requirements apply:

(a) Overcurrent protective devices shall be located as close as practicable to the output terminals of the electricity generation system so that the unprotected interconnecting conductors to an electrical installation are as short as practicable and, in no case, exceed 15 m in length.

Exception: Overcurrent protective devices need not be provided where the unexpected interruption of the supply could cause a greater danger than overcurrent.

* (b) Any unprotected interconnecting conductors between the generating set and associated switchboard shall be completely enclosed by metal or other material that is not combustible or installed underground.

Exception: Overcurrent protection may be provided by—

1 an overcurrent protective device within the electricity generation system; or

2 the characteristics of the electricity generation system being unable to support the fault current.

Where a single electricity generation system is intended to operate in parallel with another electricity generation system, circulating harmonic currents shall be limited so that the current carrying capacity of conductors is not exceeded.

NOTE: The effects of circulating harmonic currents may be limited as follows:

(a) The selection of generating sets with compensated windings.

(b) The provision of a suitable impedance in the connection to generator star points.

(c) The provision of switches that interrupt the circulatory circuit but that are interlocked so that at all times fault protection is not impaired.

(d) The provision of filtering equipment.

(e) Other effective means.

7.3.5.2 *Circuit protection*

7.3.5.2.1 *General*

The prospective short-circuit current and prospective earth fault current shall be assessed for each electricity generation system or combination of systems that can operate to supply an installation.

COPYRIGHT

auto login of Electrical Workers Licensing Group is licenced to temporarily download this document.
Electrical Workers Licensing Group may print this document but not more than 10% of the documents subscribed to may be held in printed form at any one time.

Copyright Standards New Zealand

The short-circuit rating of protective devices within the electrical installation shall not be exceeded for any of the intended methods of operation of the electricity generation system.

NOTE: If the electricity generation system has an electronic overcurrent protection system fitted, e.g. inverters, such devices may automatically limit the output current and may prevent the operation of an external overcurrent device within the installation under fault conditions.

Every circuit outgoing from an electricity generation system shall be individually protected in accordance with Clause 2.5 and shall also include additional (earth leakage) protection where required by Clause 2.6.

A circuit is considered to be protected against prospective short-circuit and earth fault currents when it is supplied from an electricity generation system incapable of delivering a current exceeding the current-carrying capacity of the circuit.

NOTE: Typical supply sources include small generating sets or inverters fitted with electronic overload protection systems.

Exception: Overcurrent protective devices shall not be provided where the unexpected interruption of the supply could cause a greater danger than overcurrent.

7.3.5.2.2 *RCDs*

The possible waveform of a fault current to earth can affect the operation of RCDs and shall be taken into account for the selection of the type of RCD.

Where an electricity generation system includes an inverter, the RCD shall be of a type suitable for the earth fault waveform of the particular inverter, and in accordance with the inverter manufacturer's instructions.

NOTE: Requirements for types of RCDs are set out in Clause 2.6.2.2.

7.3.6 Earthing

The system of protective earthing in the electrical installation shall be a MEN system in accordance with Section 5.

Exception: Where the output of the electricity generation system does not exceed 25 kVA, the output may be arranged as a separated supply, in accordance with the requirements of Clause 7.4.

Any exposed conductive parts of the electricity generation system shall be earthed by connection to the main earthing conductor at the main switchboard.

7.3.7 Connected electrical equipment

Any accessory, conductor, insulation or other component connected to the output side of an electricity generation system shall be suitable for the voltage, current and frequency of the output of the system.

Copyright Standards New Zealand

auto login of Electrical Workers Licensing Group is licenced to temporarily download this document.
Electrical Workers Licensing Group may print this document but not more than 10% of the documents subscribed to may be held in printed form at any one time.

NOTE: The values of current-carrying capacity and voltage drop specified in the AS/NZS 3008.1 series are based on 50 Hz a.c. conditions but may also be applied to d.c. installations to provide conservative results.

7.3.8 Connection to electrical installation

7.3.8.1 *Alternative supplies*

7.3.8.1.1 *General*

The following shall apply to the connection of an alternative (stand-by) supply to an installation:

(a) The incoming neutral to a MEN switchboard shall not be switched.

* **(b) The neutral-earth connection (MEN connection) shall be made within the installation at the main switchboard. This may require disconnection of any neutral-earth connection within an electricity generation system, such as an engine-driven generating set.**

This requirement applies to any switchboard fitted with an MEN connection and may be the main switchboard, or a switchboard in an outbuilding, regarded as a main switchboard for earthing purposes within the outbuilding.

(c) Neutral and earth conductors shall not operate in parallel.

Exception:

1 In Australia only, when connected to a distribution switchboard and operating on the alternative supply, the distribution board submain neutral and protective earthing conductors may be operated in parallel through a remote MEN connection within the installation provided that— **A**

- *conductors are not overloaded by current sharing;*
- *conductors are suitable for the maximum calculated fault current;*
- *the nominal size of copper earthing conductors complies with the requirements of Clause 5.3.3; and*
- *the current-carrying capacity of neutral conductors shall be not less than that of their associated active conductor.*

* *2 In New Zealand only, where the generating set is connected to a switchboard without a N-E link and when the electrical installation is operating from the alternative supply, a N-E connection and a connection to the mass of earth are required to be made in the distribution switchboard in accordance with AS/NZS 3010. This N-E connection and connection to the mass of earth are not required when the electrical installation is operating from a normal supply.* **NZ**

Copyright Standards New Zealand

auto login of Electrical Workers Licensing Group is licenced to temporarily download this document.
Electrical Workers Licensing Group may print this document but not more than 10% of the documents subscribed to may be held in printed form at any one time.

7.3.8.1.2 *Switching*

The changeover device for an alternative supply shall be selected to maintain the function of, and prevent damage to, the electrical installation being supplied. Functions to be maintained include the maintenance of the continuity of the neutral conductor (overlapping of neutrals), the operation of RCDs or the continued operation of uninterruptible power supplies.

The changeover device shall open all active conductors of the normal supply when the alternative supply is connected.

Where the operation of a switch automatically brings into service an alternative supply, the purpose of the switch shall be marked accordingly.

Switching arrangements in accordance with AS/NZS 3010 are deemed to satisfy these requirements.

NOTE: Typical switching arrangements are shown in Figures 7.3, 7.4, 7.5 and 7.6.

auto login of Electrical Workers Licensing Group is licenced to temporarily download this document.
Electrical Workers Licensing Group may print this document but not more than 10% of the documents subscribed to may be held in printed form at any one time.

Copyright Standards New Zealand

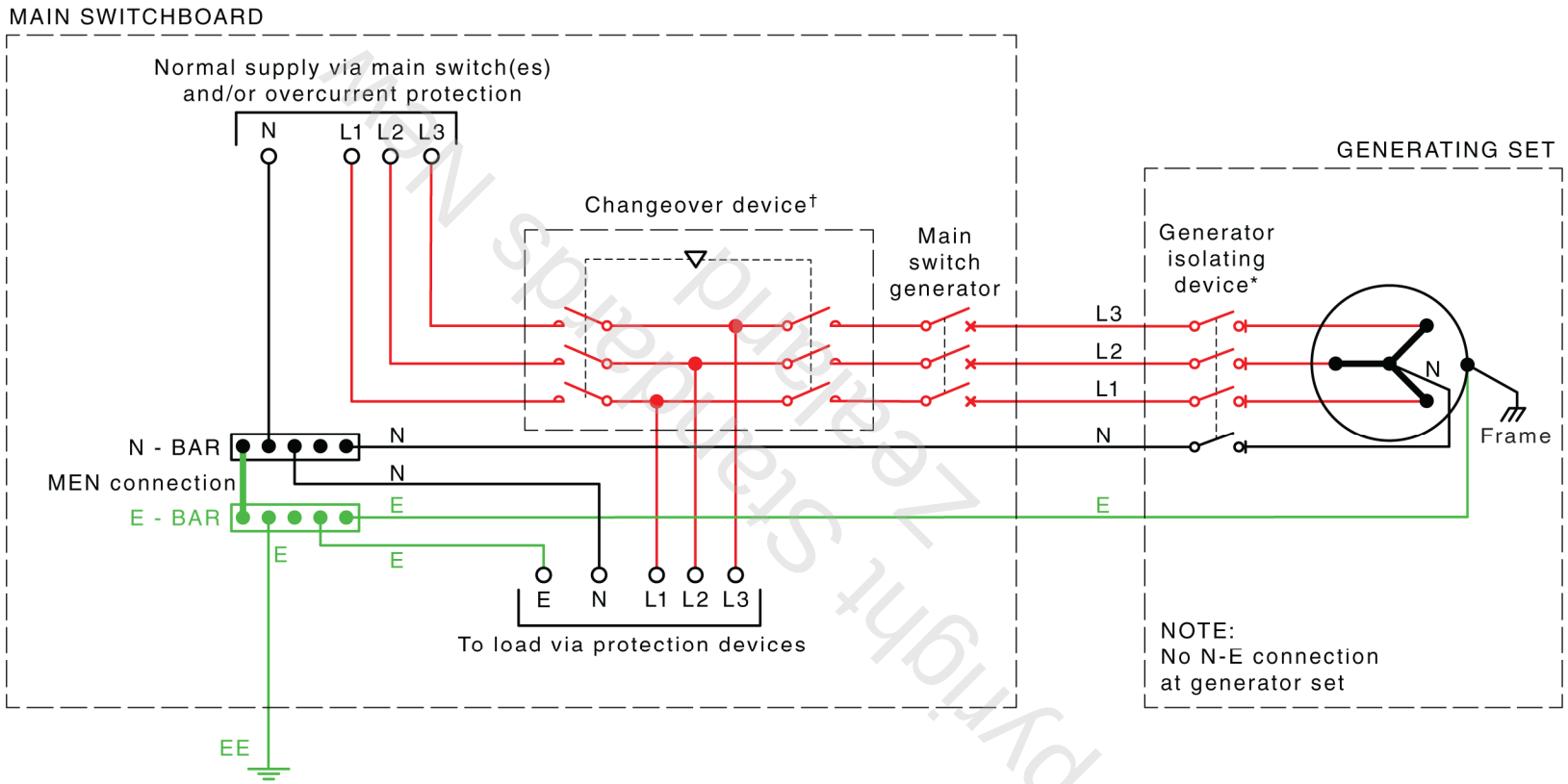

* May include overcurrent protection
† Synchronisation and control equipment not shown

FIGURE 7.3 TYPICAL EXAMPLE OF CONNECTION OF A THREE-PHASE ALTERNATIVE SUPPLY TO A SWITCHBOARD WITH LOCAL MEN CONNECTION (THREE POLE/THREE POLE CHANGEOVER)

COPYRIGHT

Copyright Standards New Zealand

auto login of Electrical Workers Licensing Group is licenced to temporarily download this document.
Electrical Workers Licensing Group may print this document but not more than 10% of the documents subscribed to may be held in printed form at any one time.

A2

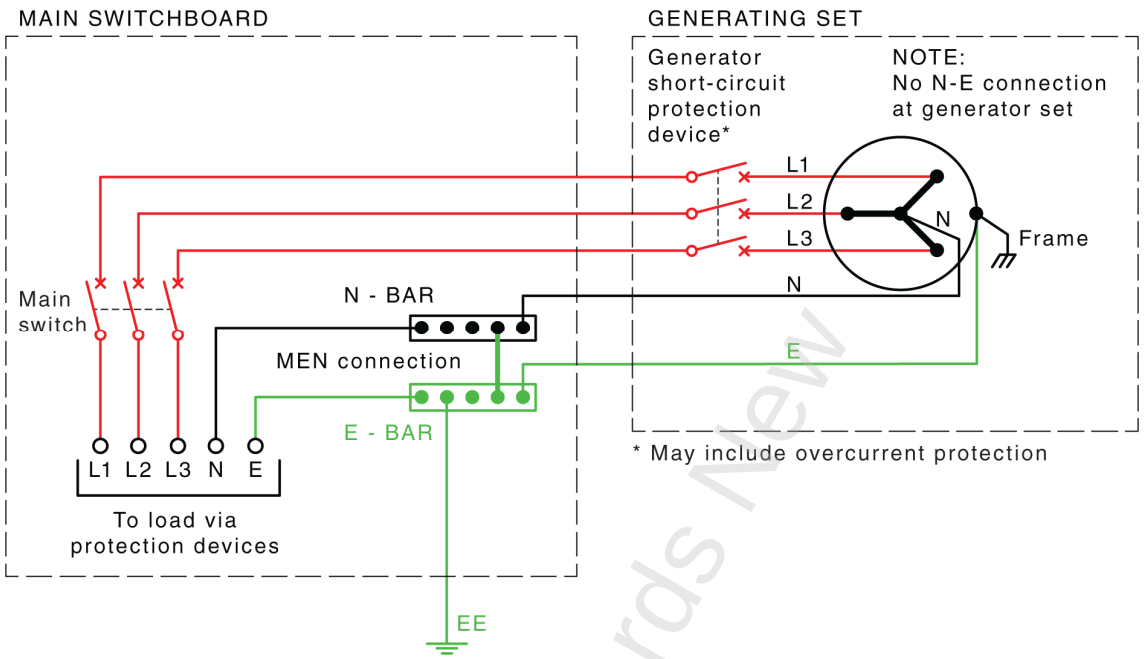

FIGURE 7.4 TYPICAL EXAMPLE OF CONNECTION OF A STAND-ALONE SYSTEM TO A SWITCHBOARD WITH A LOCAL MEN CONNECTION

Copyright Standards New Zealand

auto login of Electrical Workers Licensing Group is licenced to temporarily download this document.
Electrical Workers Licensing Group may print this document but not more than 10% of the documents subscribed to may be held in printed form at any one time.

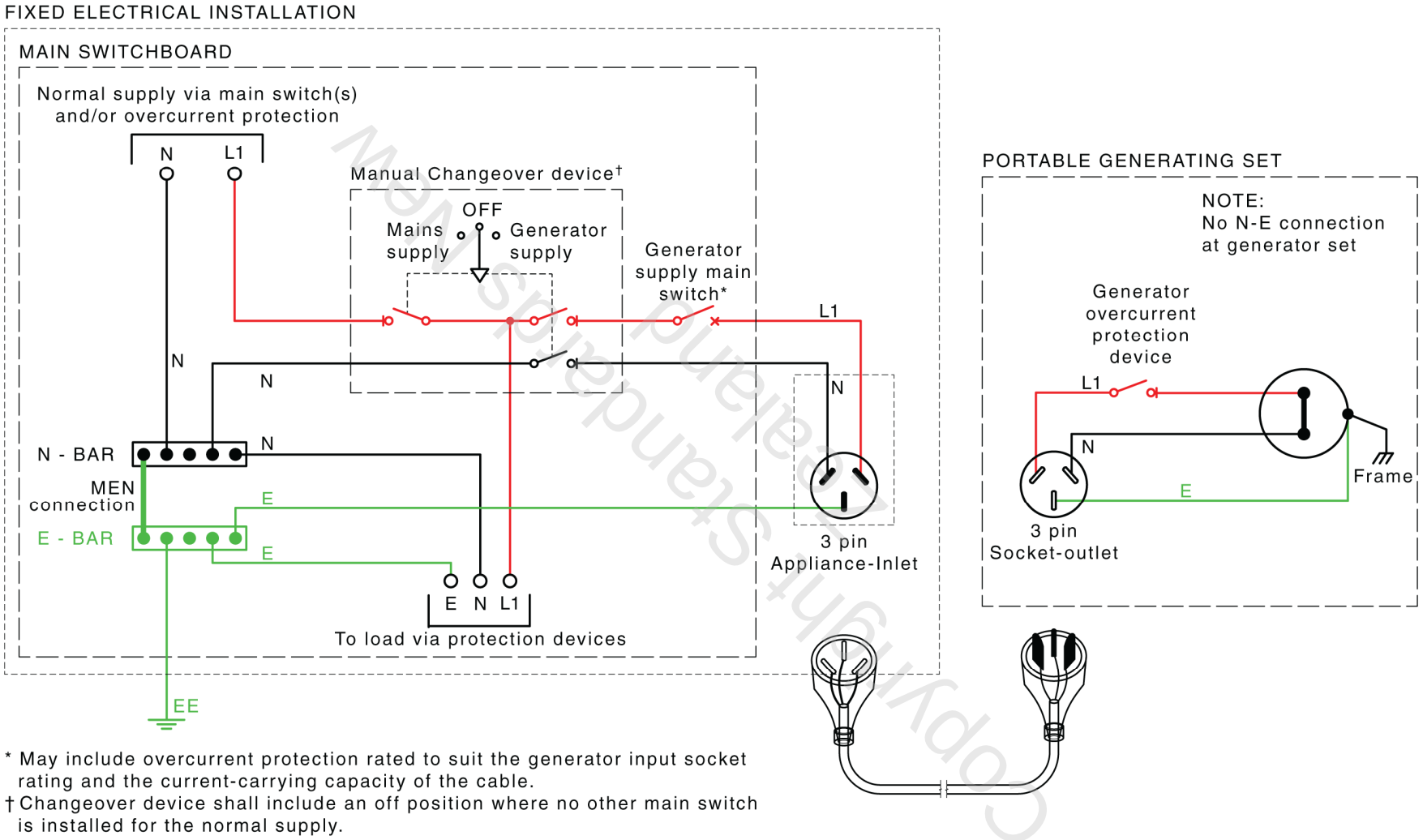

* May include overcurrent protection rated to suit the generator input socket rating and the current-carrying capacity of the cable.

† Changeover device shall include an off position where no other main switch is installed for the normal supply.

FIGURE 7.5 TYPICAL EXAMPLE OF CONNECTION OF A SINGLE-PHASE ALTERNATIVE SUPPLY TO A SWITCHBOARD WITH A LOCAL MEN CONNECTION BY MEANS OF A PLUG AND SOCKET

COPYRIGHT

Copyright Standards New Zealand

auto login of Electrical Workers Licensing Group is licenced to temporarily download this document.
Electrical Workers Licensing Group may print this document but not more than 10% of the documents subscribed to may be held in printed form at any one time.

COPYRIGHT

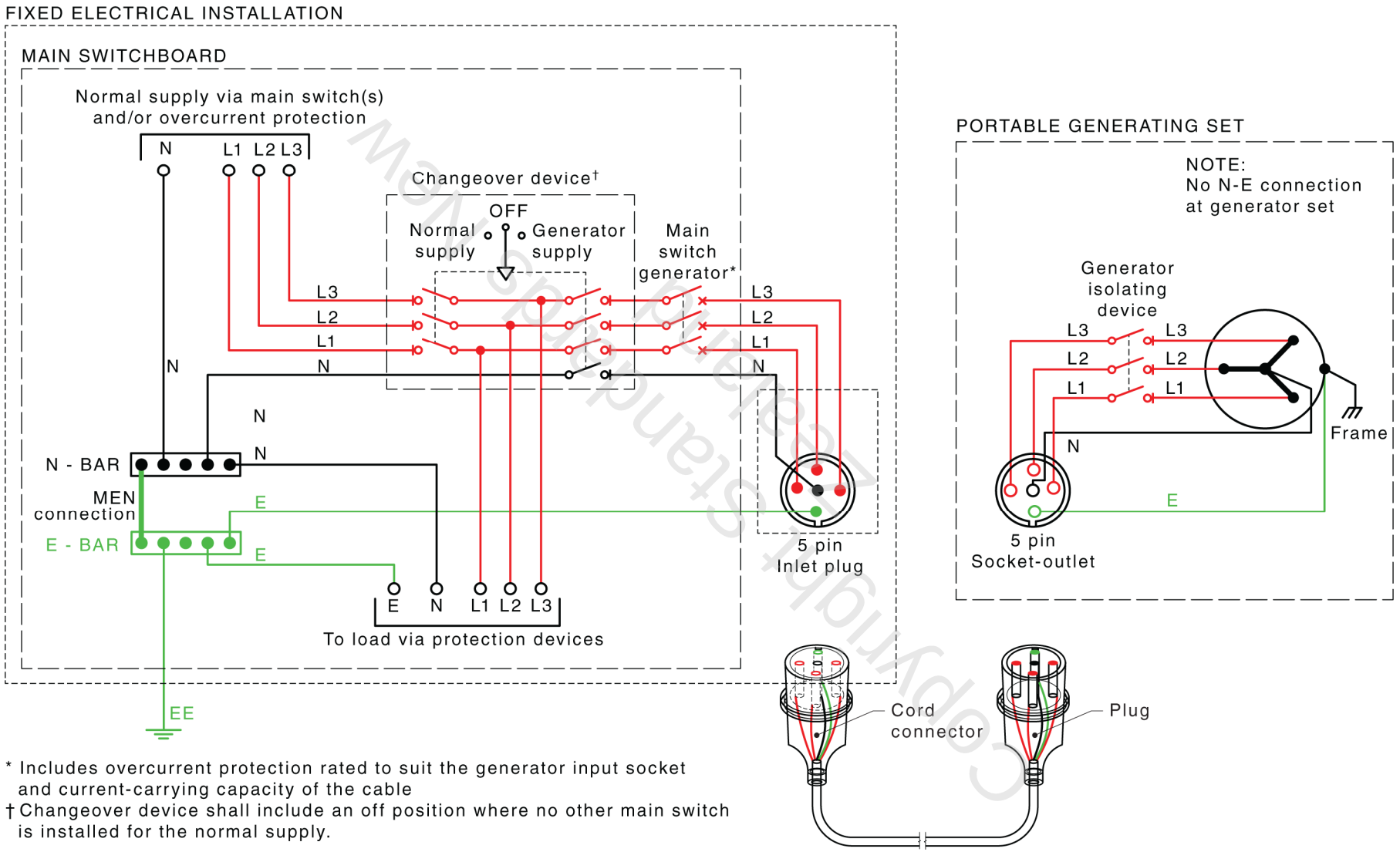

* Includes overcurrent protection rated to suit the generator input socket and current-carrying capacity of the cable

† Changeover device shall include an off position where no other main switch is installed for the normal supply.

FIGURE 7.6 TYPICAL EXAMPLE OF CONNECTION OF A THREE-PHASE ALTERNATIVE SUPPLY TO A SWITCHBOARD WITH A LOCAL MEN CONNECTION BY MEANS OF A PLUG AND SOCKET

Copyright Standards New Zealand
auto login of Electrical Workers Licensing Group is licenced to temporarily download this document.
Electrical Workers Licensing Group may print this document but not more than 10% of the documents subscribed to may be held in printed form at any one time.

7.3.8.2 *Grid-connected inverter systems*

7.3.8.2.1 *General*

The connection of a grid-connected system is subject to formal agreement with the electricity distributor.

7.3.8.2.2 *Switching*

A main switch shall be provided to enable isolation of the inverter output from the switchboard to which it is connected.

All switches shall be clearly identified as to their function, in accordance with Clause 2.3.2.

7.3.8.2.3 *Connection*

The method of connection of a grid-connected inverter system shall be in accordance with the AS/NZS 4777 series of Standards in conjunction with the requirements of the electricity distributor.

The electricity generation system shall not impose a voltage on the electrical installation measured at the point of supply between the electricity distributors' network and the electrical installation outside the limits specified by Clause 1.6.2(c).

NOTE: A typical interactive inverter a.c. connection and main switch (solar supply) is shown in Figure 7.7.

7.3.8.3 *Stand-alone power systems*

7.3.8.3.1 *General*

The consumer mains of the electrical installation shall be connected to the output of the electricity generating system.

7.3.8.3.2 *Switching*

Control of the electrical installation shall be arranged in accordance with Clause 2.3.

7.3.8.3.3 *Connection*

The method of connection of a stand-alone system shall be in accordance with the AS/NZS 4509 series of Standards.

NOTE: A typical stand-alone connection is shown in Figure 7.4 for an installation with a switchboard including a local MEN connection.

auto login of Electrical Workers Licensing Group is licenced to temporarily download this document.
Electrical Workers Licensing Group may print this document but not more than 10% of the documents subscribed to may be held in printed form at any one time.

Copyright Standards New Zealand

Notes

1 For the main switch (inverter supply) and cable protection requirements refer AS/NZS 4777.1:2016 Clause 3.4.

2 For isolating switch requirements refer AS/NZS 4777.1:2016 Clause 3.4.3.

3 Earth connections other than the main earth conductor and earth electrode are not shown.

FIGURE 7.7 TYPICAL MAIN SWITCHBOARD CONECTION OF AN INVERTER ENERGY SYSTEM
(Symbols are explained in Table J1. For additional information, refer to AS/NZS 4777.1)

COPYRIGHT

Copyright Standards New Zealand

auto login of Electrical Workers Licensing Group is licenced to temporarily download this document.
Electrical Workers Licensing Group may print this document but not more than 10% of the documents subscribed to may be held in printed form at any one time.

7.4 PROTECTION BY ELECTRICAL SEPARATION (ISOLATED SUPPLY)

NOTE: The expression ‘electrical separation’ has the same meaning as ‘isolated supply’. ‘Electrical separation’ is used throughout this Clause.

7.4.1 General

The particular requirements of this Clause (Clause 7.4) provide methods of protection against electric shock arising from indirect contact that are deemed to comply with Clause 1.5.5.5. These methods include that of protection by electrical separation of the supply.

Protection by electrical separation is an alternative to other recognized methods and is intended, in an individual circuit, to prevent shock current through contact with exposed conductive parts that might be energized by a fault in the basic insulation of that circuit.

Protection by electrical separation shall be afforded by compliance with Clauses 7.4.2 to 7.4.4, and with—

(a) Clause 7.4.5 for a supply to one item of equipment; or

(b) Clause 7.4.6 for a supply to more than one item of equipment.

NOTE: Figure 7.8 provides an illustration of a separated supply to single and multiple items of equipment.

7.4.2 Source of supply

The source supplying a separated circuit shall be—

(a) an isolating transformer complying with AS/NZS 61558 so that the output is separated from the input by double insulation or equivalent; or

NOTE: The scope of AS/NZS 61558.1 incorporates isolating transformer ratings up to 25 kVA for single-phase and 40 kVA for multiphase. The use of higher ratings is permitted provided that the relevant construction and verification provisions of AS/NZS 61558 are applied.

(b) a generator output, e.g. a motor-generator set that is installed so that the output is separated from the frame of the generator; or

NOTE: The fitting of an RCD, and the connection of an equipotential bonding conductor and an additional conductor to the generator output winding to ensure the correct operation of the RCD, does NOT provide the output separation required by this Clause. See AS/NZS 3010 for details.

(c) an isolated inverter complying with the safety requirements of AS/NZS 4763.

NOTE: The rated output for separated (isolated) transformers or generators should be limited to 25 kVA for single-phase and 40 kVA for poly-phase supplies to ensure stable operation.

Copyright Standards New Zealand

auto login of Electrical Workers Licensing Group is licenced to temporarily download this document.
Electrical Workers Licensing Group may print this document but not more than 10% of the documents subscribed to may be held in printed form at any one time.

auto login of Electrical Workers Licensing Group is licenced to temporarily download this document.
Electrical Workers Licensing Group may print this document but not more than 10% of the documents subscribed to may be held in printed form at any one time.

7.4.3 Arrangement of circuits

Separated circuits shall comply with the following requirements:

(a) Circuit voltage shall not exceed 500 V.

(b) All live parts of a separated circuit shall be reliably and effectively electrically separated from all other circuits, including other separated circuits and earth.

This requirement shall also apply to live parts of relays, contactors and similar electrical equipment installed in the separated circuit.

NOTES:

1 This requirement can be satisfied by insulation of the live parts to Class II (double or reinforced insulation) or measures that are equivalent to the input and output transformer winding isolation provisions of AS/NZS 61558.

2 Each separated circuit should comprise a separate cable or wiring system. However, multi-core cables or a common non-conductive wiring enclosure may be used where the segregation requirements of Clause 3.9.8 are satisfied.

(c) Exposed conductive parts of electrical equipment supplied by a separated circuit shall not be connected to the protective earthing conductor, or the exposed conductive parts, of the source of supply.

(d) Cables and supply flexible cords to electrical equipment shall be protected against mechanical damage or otherwise arranged to ensure that any damage that might occur is readily visible.

7.4.4 Switching devices

Switching devices shall operate in all live conductors of a separated circuit.

NOTE: Switching the active conductor(s) of the primary of an isolating transformer, in accordance with Clause 2.3.2, is an acceptable method of control and disconnection of supply.

7.4.5 Supply to single item of electrical equipment

Where a separated circuit supplies a single item of electrical equipment, any exposed conductive parts of the electrical equipment shall not be connected to the exposed conductive parts of any other circuit, including other separated circuits or earth.

7.4.6 Supply to multiple items of electrical equipment

Where a separated circuit supplies more than one item of electrical equipment, the following requirements apply:

(a) Any exposed conductive parts of the separated circuit shall be connected together by an insulated equipotential bonding conductor that is not connected to—

(i) earth;

Copyright Standards New Zealand

(ii) a protective earthing conductor or exposed conductive parts of another circuit, including another separated circuit; or

(iii) any extraneous conductive parts.

(b) The designated earthing contact of any socket-outlet installed on the separated circuit shall be connected to the equipotential bonding conductor.

(c) The designated protective earthing conductor in any supply cable or flexible cord to electrical equipment [other than Class II (double or reinforced insulation) equipment] connected to the separated circuit shall be connected to the equipotential bonding conductor.

(d) Exposed conductive parts of the source of supply that are earthed, shall not be simultaneously accessible with any exposed conductive part of the separated circuit.

(e) A protective device shall operate to disconnect the separated circuit automatically in the event of two faults resulting in exposed conductive parts being connected to live parts of different polarity. If the protective device is a circuit-breaker, the protective device shall open in all unearthed conductors substantially together.

7.4.7 Variable speed drive (VSD) EMI filters

* Where a variable speed drive uses an EMI filter it shall not reference the frame of the system. Optimally, only one EMI filter should be used on an isolated supply where multiple VSDs are used.

NOTE: EMI filters referenced to the frame produce harmful capacitive coupled currents.

7.4.8 Testing

7.4.8.1 *General*

In addition to the testing requirements of Section 8, the separation of each separated circuit (transformer secondary winding or isolated winding generator output) and the wiring to the socket-outlet shall be individually confirmed.

Separation shall be verified by a measurement of the insulation resistance between the separated circuit and—

(a) if a transformer is the source of the separated supply, the transformer primary winding;

(b) any other wiring;

(c) any other separated circuit; and

(d) earth.

Insulation resistance values obtained shall be not less than 1 MΩ, when tested at a voltage of 500 V d.c.

COPYRIGHT

Copyright Standards New Zealand

auto login of Electrical Workers Licensing Group is licenced to temporarily download this document.
Electrical Workers Licensing Group may print this document but not more than 10% of the documents subscribed to may be held in printed form at any one time.

NOTE: Where final subcircuits are not of significant length, the insulation resistance of the separated circuit should be significantly greater than 1 MΩ, e.g. with short lengths (say 50 m) of polymeric cable, a value in excess of 50 MΩ would be expected.

7.4.8.2 *Single items of electrical equipment*

Where a single item of electrical equipment is supplied from a single separated circuit, separation shall be verified in accordance with
A1 | Clause 7.4.8.1 and, in addition, by a measurement of the insulation resistance between earth and—

(a) exposed conductive parts; or

(b) the earth contact of a socket-outlet.

7.4.8.3 *Multiple items of electrical equipment*

Where more than one item of electrical equipment is supplied from a single separated circuit, separation shall be verified in accordance with
A1 | Clause 7.4.8.1 and, in addition, by a measurement of the insulation resistance between—

(a) the separated circuit and the equipotential bonding conductor; and

(b) the equipotential bonding conductor and earth; and

(c) the equipotential bonding conductor and any equipotential bonding conductor associated with another separated circuit.

7.4.8.4 *Bonding conductor continuity*

The resistance of an equipotential bonding conductor for the earth contacts of socket-outlets, or exposed conductive parts connected to the same separated circuit, shall not exceed 0.5 Ω.

auto login of Electrical Workers Licensing Group is licenced to temporarily download this document.
Electrical Workers Licensing Group may print this document but not more than 10% of the documents subscribed to may be held in printed form at any one time.

Copyright Standards New Zealand

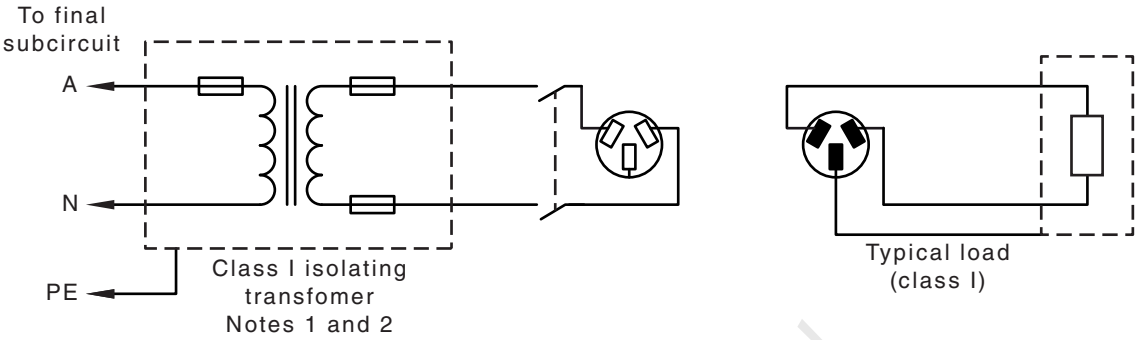

(a) Separated (or isolated) supply with single socket-outlet

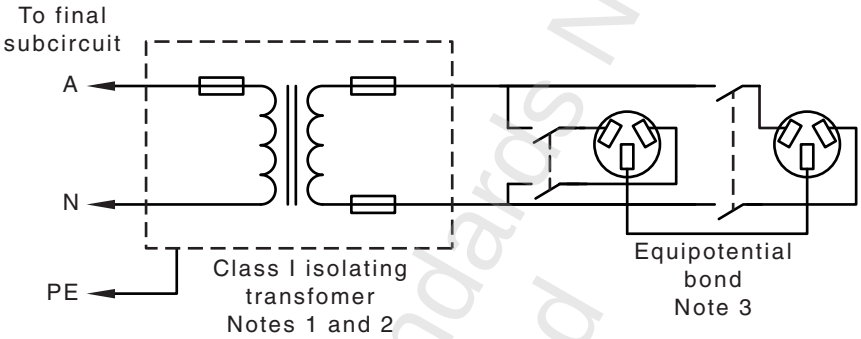

(b) Separated (or isolated) supply with multiple socket-outlets

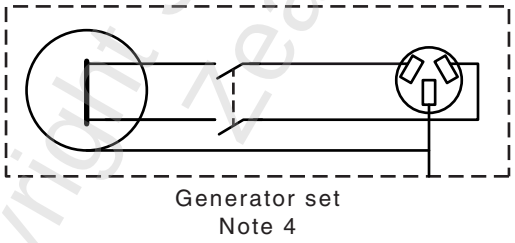

(c) Generator set with isolated winding and single socket-outlet

NOTES:

1 Transformer to AS/NZS 61558. If Class II, omit earth connection from final subcircuit.

* 2 Transformer or generator provided with separated or isolated output protection which may be circuit-breaker operating in all live (active and neutral) conductors or a high rupturing capacity (HRC) fuse operating in all active conductors.

3 Equipotential bonding conductor has to be insulated and NOT connected to earth. If more than one socket-outlet, all socket-outlet earth pins have to be linked together.

4 An RCD cannot be fitted as the equipotential bond is connected to the frame of the generator.

FIGURE 7.8 SEPARATED (ISOLATED) SUPPLIES
(Symbols are explained in Table J1)

COPYRIGHT

Copyright Standards New Zealand

auto login of Electrical Workers Licensing Group is licenced to temporarily download this document.
Electrical Workers Licensing Group may print this document but not more than 10% of the documents subscribed to may be held in printed form at any one time.

7.5 EXTRA-LOW VOLTAGE ELECTRICAL INSTALLATIONS

7.5.1 Scope

The particular requirements of this Clause (Clause 7.5) apply to electrical installations or parts of electrical installations operating at extra-low voltage and are deemed to comply with Clause 1.5.7 for both basic and fault protection (protection against both direct contact and indirect contact) by the use of extra-low voltage.

7.5.2 Application

Extra-low voltage electrical installations shall be one of the following systems—

(a) SELV; or

(b) PELV.

The particular requirements of this Clause (Clause 7.5) supplement, replace or modify requirements of other Sections of this Standard.

Where no particular requirement is specified in this Clause, extra-low voltage electrical installations shall comply with the relevant requirements of other Sections of this Standard.

Where an electrical installation operates at extra-low voltage but does not comply with the SELV or PELV requirements of this Clause (Clause 7.5), it is deemed to be operating at low voltage and shall comply with the relevant requirements of other Sections of this Standard.

7.5.3 Sources of supply to SELV and PELV systems

The source supplying a SELV or PELV system shall be one of the following:

(a) A safety isolating transformer complying with AS/NZS 61558.

(b) A source of current independent of a higher voltage supply, such as an engine-driven generator, or an electrochemical source, such as a battery.

(c) A source of current separated from higher voltage electrical installations, such as a motor-generator set, with electrically separate windings having a degree of electrical separation equivalent to that specified by Item (a).

(d) Certain electronic devices complying with appropriate Standards, where, in the case of an internal fault, the voltage at the output terminals cannot exceed extra-low voltage. Higher voltages at the output terminals may be used, provided that the voltage at the output terminals is immediately reduced to extra-low voltage if contact is made with live parts under normal or fault conditions.

NOTE: Such devices include insulation testing equipment.

auto login of Electrical Workers Licensing Group is licenced to temporarily download this document.
Electrical Workers Licensing Group may print this document but not more than 10% of the documents subscribed to may be held in printed form at any one time.

Copyright Standards New Zealand

7.5.4 Separation requirements for SELV and PELV circuits

Live parts of SELV and PELV circuits shall be electrically separated from each other and from other higher voltage circuits.

Arrangements shall ensure a level of electrical separation equivalent to that between the input and output of a safety isolating transformer complying with AS/NZS 61558.

SELV and PELV circuit conductors shall be segregated from those of other circuit conductors.

Exception: SELV and PELV circuit conductors installed in accordance with Clause 3.9.8.3 may be contained within the same wiring system as low voltage circuits.

Live parts shall be arranged so that short-circuit or arcing, either between live parts or between live parts and other conductive material, will not take place under the conditions that may reasonably be expected in service.

7.5.5 Arrangement of SELV circuits

Live parts of SELV circuits shall not be connected to earth or protective earthing conductors that are part of other circuits or to other live parts.

SELV circuits shall not be connected to—

(a) other circuits;

(b) earth;

(c) earthing conductors or exposed conductive parts of another system; or

(d) extraneous conductive parts.

Exception: Connection to extraneous conductive parts may be made where electrical equipment is inherently required to be so connected and it is ensured that the extraneous conductive parts cannot attain a voltage exceeding that of the SELV circuit.

NOTE: If SELV circuits are liable to come into contact, either fortuitously or intentionally, with the exposed conductive parts of other circuits, protection against electric shock no longer depends solely on protection by SELV but on the protective measure to which the latter exposed conductive parts are subject.

Where the nominal voltage exceeds 25 V a.c. or 60 V ripple-free d.c., protection against electric shock in normal service (direct contact) shall be provided by—

(i) barriers or enclosures with a degree of protection of at least IPXXB or IP2X; or

(ii) insulation capable of withstanding a test voltage of 500 V a.c. for 1 min.

auto login of Electrical Workers Licensing Group is licenced to temporarily download this document.
Electrical Workers Licensing Group may print this document but not more than 10% of the documents subscribed to may be held in printed form at any one time.

Copyright Standards New Zealand

NOTES:

1 Basic protection is not necessary for voltages not exceeding 25 V a.c. or 60 V ripple-free d.c., in dry indoor conditions.

2 Insulation is capable of withstanding the test voltage for the required period when the insulation resistance after the test voltage has been applied for the specified period remains above the required minimum value.

7.5.6 Arrangement of PELV circuits

The following applies for PELV circuits, where one conductor of the output circuit is earthed.

Basic protection shall be provided by—

(a) barriers or enclosures affording a degree of protection of at least IPXXB or IP2X; or

(b) insulation capable of withstanding a test voltage of 500 V a.c. for 1 min.

Exception: Basic protection shall be deemed unnecessary if electrical equipment is within the zone of influence of equipotential bonding and the nominal voltage does not exceed—

1 25 V a.c. or 60 V ripple-free d.c., when electrical equipment is normally used in a dry location only and large-area contact with the human body is not to be expected; or

2 6 V a.c. or 15 V ripple-free d.c., in all other cases.

NOTES:

1 The earthing of circuits may be achieved by an appropriate connection to earth within the source itself.

2 AS/NZS 60479 indicates that large-area contact is approximately 8000 mm^2.

3 Insulation is capable of withstanding the test voltage for the required period when the insulation resistance, after the test voltage has been applied for the specified period, remains above the required minimum value.

7.5.7 Voltage drop in conductors

The drop in voltage at any point in an extra-low voltage electrical installation shall not exceed 10% of the nominal value when all live conductors are carrying the circuit-operating current.

NOTE: Information on voltage drop is given in the AS/NZS 3008.1 series.

Exception: This requirement need not apply where electrical equipment is specially designed for operation with a voltage drop greater than 10%.

NOTE: Motor starting, solenoid closing and other similar applications where high transient currents may be experienced that can significantly increase voltage drop, are excluded from consideration.

auto login of Electrical Workers Licensing Group is licenced to temporarily download this document.
Electrical Workers Licensing Group may print this document but not more than 10% of the documents subscribed to may be held in printed form at any one time.

Copyright Standards New Zealand

7.5.8 Control of an electrical installation

7.5.8.1 *Main switches*

The supply to an extra-low voltage electrical installation shall be controlled by a main switch or switches operating in all unearthed conductors.

Exception: This requirement need not apply where the extra-low voltage electrical installation is supplied from part of an electrical installation operating at a voltage greater than extra-low voltage and the operation of the main switch for the high voltage part of the electrical installation results in the disconnection of the supply.

7.5.8.2 *Other switches*

Switches in an extra-low voltage electrical installation shall comply with the following:

(a) A switch shall operate in all unearthed conductors where the extra-low voltage supply is earthed at the point of supply, e.g. PELV.

(b) Switches may operate in one less conductor than the number of conductors in the circuit, e.g. SELV.

7.5.9 Overcurrent protection

7.5.9.1 *General*

Every extra-low voltage circuit shall be individually protected at its origin against overload and short-circuit currents by a protective device that—

(a) shall comply with the applicable requirements of Clauses 2.2 and 2.5; and

(b) may be provided in one conductor less than the number of conductors in the circuit.

Where the extra-low voltage supply is earthed at the point of supply, the protective devices shall be installed in all the unearthed conductors.

Exception: Circuits arranged in accordance with Clause 7.5.9.2 need not be provided with overcurrent protection.

7.5.9.2 *Omission of overcurrent protection*

Overcurrent protection need not be provided where one of the following applies:

(a) The expected interruption to supply could result in a greater danger than the overcurrent.

(b) The rated output of the source of supply does not exceed the current rating of the circuit and the circuit is supplied from either of the following sources:

(i) A transformer marked to indicate that it is short-circuit proof in accordance with AS/NZS 61558 and—

(A) the rated output of the transformer does not exceed 1 A; or

COPYRIGHT

Copyright Standards New Zealand

auto login of Electrical Workers Licensing Group is licenced to temporarily download this document.
Electrical Workers Licensing Group may print this document but not more than 10% of the documents subscribed to may be held in printed form at any one time.

(B) the short-circuit current of the transformer does not exceed the current-carrying capacity of the circuit conductors and such short-circuit current is marked on the transformer.

(ii) A battery, comprising cells having a high internal resistance, e.g. Leclanché or dry-type primary cells.

7.5.10 Connecting devices

Plug and socket-outlet devices, including installation couplers, for SELV and PELV shall comply with the following:

(a) Plugs shall not be able to enter sockets of other voltage systems.

(b) Sockets shall not accept plugs of other voltage systems.

(c) Sockets shall not have a contact for a protective earthing conductor.

7.5.11 Wiring systems

7.5.11.1 *General*

Conductors and insulation of cables for extra-low voltage electrical installations shall be suitable for the intended purpose and need not be further protected unless installation conditions so demand.

NOTE: Attention is drawn to the requirements of Clause 3.9.8.3 for segregation of different wiring systems and the need for further protection in some situations.

7.5.11.2 *Aerial conductors*

Aerial conductors used in extra-low voltage electrical installations shall be installed in accordance with the applicable requirements of Clause 3.12.

Exceptions:

1 The clearances above ground or elevated areas need not apply provided that the requirements of Clause 3.3.1 are satisfied.

2 Bare conductors may be erected in accordance with the requirements for insulated conductors.

7.5.11.3 *Underground conductors*

There are no depth-of-burial requirements for the safety of extra-low voltage cables.

NOTE: Consideration should be given to the risk of mechanical damage.

7.5.12 Testing

7.5.12.1 *General*

The separation of ELV circuits shall be verified in accordance with Clause 7.5.12.2 in the case of protection by SELV, and Clause 7.5.12.3 in the case of protection by PELV.

Electrical Workers Licensing Group is licenced to temporarily download this document.
auto login of Electrical Workers Licensing Group may print this document but not more than 10% of the documents subscribed to may be held in printed form at any one time.

Copyright Standards New Zealand

The insulation resistance value obtained in accordance with Clauses 7.5.12.2 and 7.5.12.3 shall not be less than 0.5 MΩ when tested at a voltage of 250 V d.c.

7.5.12.2 *Protection by SELV*

The separation of live parts from those of other circuits and from earth shall be confirmed by a measurement of the insulation resistance.

7.5.12.3 *Protection by PELV*

The separation of live parts from other circuits shall be confirmed by a measurement of the insulation resistance.

7.6 HIGH VOLTAGE ELECTRICAL INSTALLATIONS

7.6.1 Scope

The particular requirements of this Clause (Clause 7.6) apply to electrical installations and those portions of electrical installations operating at high voltage.

For protection and earthing purposes, this Clause also applies to all the electrical equipment up to and including any low voltage cables and switchgear associated with high voltage transformers.

This Clause (Clause 7.6) does not apply to the following:

(a) Electric discharge illumination systems.

(b) X-ray equipment.

(c) High frequency equipment.

(d) High voltage wiring and electrical equipment enclosed within self-contained electrical equipment and supplied at low voltage where precautions have been taken to prevent contact with high voltage conductors.

7.6.2 Application

7.6.2.1 *In Australia* **A**

In Australia, electrical installations and those portions of electrical installations operating at high voltage shall be installed in accordance with AS 2067.

7.6.2.2 *In New Zealand* **NZ**

In New Zealand, requirements for high voltage electrical installations and those portions of electrical installations operating at high voltage are set in the Electricity (Safety) Regulations.

Electrical Workers Licensing Group is licenced to temporarily download this document.
auto login of Electrical Workers Licensing Group may print this document but not more than 10% of the documents subscribed to may be held in printed form at any one time.

Copyright Standards New Zealand

7.6.3 Issues relevant to high voltage installations

A1 For the design of electrical installations with voltage 1 kV or more, the issues that shall be taken into account include the following:

(a) Insulation levels to withstand highest voltage and/or impulse withstand voltages.

(b) Minimum clearances to live parts taking into account electrode configurations and impulse withstand voltages.

(c) Minimum clearances under special conditions.

(d) The application of various devices connected to the system.

(e) The methods of installation of equipment, cables and accessories.

(f) General requirements of installations regarding choice of circuit arrangement, documentation, transport routes, lighting, operational safety and labelling.

(g) Special requirements with respect to buildings.

(h) Protection measures with respect to access.

(i) Protection measures with respect to fire.

(j) Provision of earthing such that the system operates under all conditions and ensures safety of human life where there is legitimate access.

(k) Testing.

7.7 HAZARDOUS AREAS (EXPLOSIVE GAS OR COMBUSTIBLE DUSTS)

7.7.1 Scope

The particular requirements of this Clause (Clause 7.7) apply to the selection of electrical equipment and its installation to ensure safe use in areas where flammable or combustible materials are produced, prepared, processed, handled, stored or otherwise exist, and therefore may give rise to an explosive atmosphere.

7.7.2 Classification of hazardous areas

7.7.2.1 *Responsibility for classification*

The responsibility for classification of a hazardous area (see Clause 1.4.15) rests with the persons or parties in control of the installation. The requirements are contained in AS/NZS 60079.10.1 for gas or vapour and AS/NZS 60079.10.2 for combustible dust.

auto login of Electrical Workers Licensing Group is licenced to temporarily download this document.
Electrical Workers Licensing Group may print this document but not more than 10% of the documents subscribed to may be held in printed form at any one time.

Copyright Standards New Zealand

7.7.2.2 *Hazardous areas (AS/NZS 60079 series)*

For the purposes of classification, two types of hazardous area are as follows:

(a) Hazardous area (gas or vapour) in which an explosive gas atmosphere is present, or may be expected to be present, in quantities such as to require special precautions for the construction, installation and use of apparatus.

NOTES:

1 Hazardous areas are divided into zones based upon the frequency and duration of the occurrence of explosive gas atmospheres.

2 Explosive gas atmospheres include flammable vapours (from liquids).

(b) Hazardous area (dust) in which combustible dust in the form of a cloud is present, or may be expected to be present, in quantities such as to require special precautions for the construction, installation and use of equipment.

NOTES:

1 Hazardous areas are divided into zone based upon the frequency and duration of the occurrence of explosive dust atmospheres.

2 The potential of creating an explosive dust cloud from a dust layer.

3 Combustible dusts may include fibres and flyings.

7.7.2.3 *Reduction or elimination of the hazard*

Through design and operation, it is possible to reduce the degree of hazard. This is achieved by giving attention to items such as plant layout, product containment and ventilation.

7.7.2.4 *Electrical equipment*

7.7.2.4.1 *Selection*

Electrical equipment selected for use in hazardous areas shall comply with the applicable requirements of AS/NZS 60079.14.

7.7.2.4.2 *Installation*

Electrical equipment shall be installed in accordance with the installation requirements of AS/NZS 60079.14.

NOTES:

1 AS/NZS 60079.14 includes requirements for the competency of persons.

2 AS/NZS 60079.17 includes requirements for inspection and maintenance.

7.8 STANDARDS FOR SPECIFIC ELECTRICAL INSTALLATIONS

7.8.1 Scope

A1 **This Clause (Clause 7.8) specifies Standards for specific electrical installations.**

auto login of Electrical Workers Licensing Group is licenced to temporarily download this document.
Electrical Workers Licensing Group may print this document but not more than 10% of the documents subscribed to may be held in printed form at any one time.

Copyright Standards New Zealand

A1 **Where the listed Standards do not specify a requirement, the relevant requirements of this Standard apply.**

Clause 7.8.2 lists Standards that are additional to, replace, or modify the general requirements of this Standard.

Clause 7.8.3 lists Standards that provide additional guidance for specific electrical installations. The relevant regulatory authorities may have requirements additional to these standards with a varying method of application.

7.8.2 Standards containing requirements that are additional to, replace, or modify the general requirements of this Standard

7.8.2.1 *Construction and demolition sites*

Electrical installations for construction and demolition sites shall comply with AS/NZS 3012.

7.8.2.2 *Electromedical treatment areas*

Electrical installations in electromedical treatment areas (including home patient areas) shall comply with AS/NZS 3003.

7.8.2.3 *Transportable structures and vehicles including their site supplies*

Electrical installations in transportable structures and vehicles including their site supplies shall comply with AS/NZS 3001.

7.8.2.4 *Marinas and recreational boats*

Electrical installations in marinas and recreational boats shall comply with AS/NZS 3004.

NOTES:

1 AS/NZS 3004 is a two-part Standard as follows:

(a) AS/NZS 3004.1 provides requirements for electrical installations on marinas.

(b) AS/NZS 3004.2 provides requirements for electrical installations in recreational boats.

2 In Australia, for electrical installations on commercial vessels, refer to the Australian Maritime Safety Authority, National Marine Safety Committee's *National Standard for Commercial Vessels*, Part C: Design and construction—Section 5: Engineering—Subsection 5B: Electrical (NSCV C 5B). A

7.8.2.5 *Shows and carnivals*

Electrical installations in shows and carnivals shall comply with AS/NZS 3002.

7.8.2.6 *Telecommunication network power supplies*

Extra-low voltage (d.c.) power supply installations within public telecommunication networks shall comply with AS/NZS 3015.

COPYRIGHT

Copyright Standards New Zealand

auto login of Electrical Workers Licensing Group is licenced to temporarily download this document.
Electrical Workers Licensing Group may print this document but not more than 10% of the documents subscribed to may be held in printed form at any one time.

7.8.2.7 *Cranes and hoists*

Electrical installations for cranes and hoists shall be in accordance with the applicable requirements of this Standard.

NOTE: Such electrical installations may be subject to the requirements of the AS 1418 series or other requirements of the relevant regulatory authorities.

7.8.2.8 *Lifts*

Electrical installations for lifts shall be in accordance with the applicable requirements of this Standard.

NOTES:

1 See Clause 7.2.3.4 for requirements affecting the control and arrangement of special lift installations.

2 Such electrical installations are within the scope of the AS 1735 series and compliance therewith may be required by the relevant regulatory authorities.

7.8.2.9 *High voltage installations*

* In Australia, high voltage electrical installations shall comply with AS 2067. **A**

In New Zealand, high voltage installation shall comply with the New Zealand Electricity (Safety) Regulations. **NZ**

7.8.2.10 *Generating sets*

* Electrical installations which include the use of generating sets for the supply of electricity at voltages normally exceeding 50 V a.c. or 120 V d.c. shall comply with AS/NZS 3010.

7.8.2.11 *Inverters*

* Electrical installations including grid connections of energy systems via inverters shall comply with AS/NZS 4777 series.

A1

7.8.2.12 '**Text deleted**'

7.8.2.13 *Stand-alone power systems*

* Electrical installations including stand-alone power systems shall comply with AS/NZS 4509 series.

7.8.2.14 *Photovoltaic (PV) arrays*

* Electrical installations including photovoltaic arrays shall comply with AS/NZS 5033.

7.8.2.15 *Secondary battery systems*

A1

Battery energy storage systems (BESS) and associated battery systems, as defined in AS/NZS 5139, shall comply with AS/NZS 5139. All other secondary battery systems, as defined in the scope of AS 3011 (series), installed in buildings, structures or premises such as those with critical power continuity requirements (e.g. for telecommunications, uninterruptible

Copyright Standards New Zealand

auto login of Electrical Workers Licensing Group is licenced to temporarily download this document.
Electrical Workers Licensing Group may print this document but not more than 10% of the documents subscribed to may be held in printed form at any one time.

A1 power supplies (UPS), hospitals, sub-stations and black start) that are outside the scope of AS/NZS 5139 shall comply with AS 3011 (series).

7.8.2.16 *Mobile medical facilities*

* In New Zealand, electrical installations for mobile medical facilities shall comply with NZS 6115. NZ

7.8.2.17 *Floor and ceiling heating systems*

* In New Zealand, electrical installations for floor and heating systems shall comply with NZS 6110. NZ

7.8.2.18 *Explosive atmospheres and hazardous areas*

* Electrical installations located in explosive atmospheres/hazardous areas that comply with AS/NZS 60079.14 are deemed to comply with this Standard.

7.8.3 Standards containing guidance

7.8.3.1 *Outdoor sites under heavy conditions*

Electrical installations in outdoor sites where heavy conditions exist may require compliance with additional requirements.

Such sites include open-cast mines, quarries, stockpiles and other industrial areas exposed to particularly onerous environmental and operational conditions.

NOTE: Such electrical installations are within the scope of AS/NZS 3007. Compliance with AS/NZS 3007, although not a requirement of this Standard, may be required by relevant regulatory authorities, who may also have other requirements.

7.8.3.2 *Electric fences*

Guidance on the installation requirements for electric fences is given in AS/NZS 3014 and AS/NZS 3016.

Where an electrically operated fence is connected directly or indirectly to electricity supply mains, such connections shall be made only through a mains-operated fence controller complying with AS/NZS 60335.2.76.

7.8.3.3 *Emergency power for supply in hospitals*

* Guidance on the installation requirements for emergency power supplies for hospitals is given in AS/NZS 3009.

7.8.3.4 *Lightning protection*

* Guidance on the installation requirements for lightning protection systems is given in AS/NZS 1768.

7.8.3.5 *Uninterruptible power systems (UPS)*

* Guidance on the installation requirements for uninterruptible power systems is given in AS 62040 series.

auto login of Electrical Workers Licensing Group is licenced to temporarily download this document.
Electrical Workers Licensing Group may print this document but not more than 10% of the documents subscribed to may be held in printed form at any one time.

Copyright Standards New Zealand

7.8.3.6 *Semiconductor power converters*

* Guidance on the installation requirements for semiconductor power converters is given in AS 60146 series.

7.8.3.7 *Rotating electrical machines*

* Guidance on the installation requirements for rotating electrical machines is given in AS 60034 series.

7.8.3.8 *Periodic verification*

* Guidance on period verification of electrical installations is given in AS/NZS 3019.

7.8.3.9 *Verification guidelines*

* Verification guidelines for common tests that may be used to check whether low voltage installations comply with this Standard are given in AS/NZS 3017.

7.8.3.10 *Film, video and television sites*

Guidance on the safe working procedures for the use of electrical equipment and electrical installations on film, video and television sites is given in AS/NZS 4249.

NOTE: Compliance with AS/NZS 4249 or other requirements, although not a requirement of this Standard, may be required by relevant regulatory authorities.

A1

7.9 SUPPLIES FOR ELECTRIC VEHICLES (NZ ONLY)

7.9.1 Scope

The particular requirements of this Clause (Clause 7.9) supplement or amend the requirements of Sections 2 to 7 of this Standard for parts of electrical installations intended for the charging of electric vehicles for New Zealand only.

NOTES:

1 Appendix P contains information on the modes of charging used for charging systems used for electric vehicles.

2 Attention is drawn to the contribution of EV charging to the maximum demand of an installation. Refer to Tables C1 and C2.

3 Electricity distributors may require notification of the installation of EV charging equipment.

7.9.2 Supply (NZ only)

7.9.2.1 *Source of supply*

The supply shall not be obtained from a switchboard in an outbuilding that has a separate MEN earthing system in accordance with Clause 5.5.3.1 option (c).

auto login of Electrical Workers Licensing Group is licenced to temporarily download this document.
Electrical Workers Licensing Group may print this document but not more than 10% of the documents subscribed to may be held in printed form at any one time.

Copyright Standards New Zealand

A1

7.9.2.2 *Socket-outlets for Mode 1 charging*

Socket-outlets shall not be installed for use for Mode 1 charging.

7.9.3 Domestic electrical installations (NZ only)

7.9.3.1 *Facilities for other than Mode 1 charging*

Every new domestic electrical installation that has a garage, being fully enclosed space including a door that is used for accommodating a motor vehicle that is incorporated as part of the main dwelling structure, shall have a facility to enable electric vehicle charging in accordance with either Clause 7.9.3.2 or Clause 7.9.3.3.

7.9.3.2 *Facilities for Mode 2 charging*

Each facility for Mode 2 charging shall comply with all of the following:

(a) The final subcircuit shall have a minimum current-carrying capacity of 20 A and shall not supply any other socket-outlet or point in wiring.

(b) The socket-outlet shall comply with one of the following Standards and shall not be switched by the insertion or withdrawal of a plug:

(i) AS/NZS 3112.

(ii) IEC 60309-2.

(iii) AS/NZS 3123.

(iv) BS 1363-2.

(c) The socket-outlet shall be installed at a minimum height of 800 mm from the floor or ground.

7.9.3.3 *Facilities for Mode 3 and 4 charging*

The supply for Mode 3 and 4 electric vehicle charging systems shall comply with all of the following:

(a) Single-phase final subcircuits shall have a minimum current-carrying capacity of 32 A.

NOTE: Where electric vehicle charging equipment that is greater than 20 A single phase is installed, consideration should be given to upgrading mains and/or the installation of a load management device to ensure continuity of supply and avoid excessive voltage drop.

(b) The final subcircuit shall not supply any other point in wiring.

(c) The final subcircuit shall be protected by a separate residual current device (RCD) of Type B complying with IEC 62423, with a maximum rated residual current of 30 mA which operates in all live (active and neutral) conductors. Combined RCD and overcurrent circuit-breakers (RCBOs) may be used.

Exception: For Mode 3 charging facilities a Type A RCD with a maximum rated residual current of 30 mA, in conjunction with a

COPYRIGHT

auto login of Electrical Workers Licensing Group is licenced to temporarily download this document.
Electrical Workers Licensing Group may print this document but not more than 10% of the documents subscribed to may be held in printed form at any one time.

Copyright Standards New Zealand

A1 *residual direct current-detecting device (RDC-DD) conforming to IEC 62955 may be used.*

NOTE: The RDC-DD disconnects supply where residual d.c. currents of 6 mA or greater are detected.

(d) The charging equipment shall be connected by direct connection in accordance with Clause 4.3.2.1.

(e) An isolating switch complying with Clause 2.3.2.2.1, with a minimum current rating 32 A, shall be provided for the final subcircuit adjacent to the charging facility.

(f) The socket-outlet or cable of the charging equipment shall be installed at a minimum height of 800 mm from the floor or ground.

7.9.4 Other electrical installations (NZ only)

The final subcircuit shall be protected by a separate residual current device (RCD) of Type B complying with IEC 62423, with a maximum rated residual current of 30 mA which operates in all live (active and neutral) conductors. Combined RCD and overcurrent circuit-breakers (RCBOs) may be used.

Exception: For Mode 3 charging facilities a Type A RCD with a maximum rated residual current of 30 mA, in conjunction with a residual direct current-detecting device (RDC-DD) conforming to IEC 62955 may be used.

NOTE: The RDC-DD disconnects supply where residual d.c. currents of 6 mA or greater are detected.

auto login of Electrical Workers Licensing Group is licenced to temporarily download this document.
Electrical Workers Licensing Group may print this document but not more than 10% of the documents subscribed to may be held in printed form at any one time.

Copyright Standards New Zealand

SECTION 8 VERIFICATION

8.1 GENERAL

8.1.1 Application

This Section specifies the minimum requirements for the inspection and testing to satisfy the fundamental safety principles of Part 1 of this Standard in relation to verification of an installation.

8.1.2 General requirements

Prior to placing an electrical installation, or any part thereof, in service following construction, alteration or repair, it shall be verified, as far as practicable, that the installation is safe to energize and will operate in accordance with the requirements of this Standard.

To confirm that the requirements of this Standard have been met, after completion and before being placed in service, the installation shall be—

(a) inspected in accordance with Clauses 8.1.3 and 8.2 as far as is practicable; and

(b) tested in accordance with Clause 8.3.

Precautions shall be taken to ensure the safety of persons and to avoid damage to property and the electrical installation equipment during inspection and testing.

Where the electrical installation is an alteration or repair to an existing electrical installation, it shall be verified that the alteration or repair complies with this Standard and does not impair the safety of the existing electrical installation.

NOTES:

1 Additional visual inspections and testing may be required for specific installations, such as separated supplies, SELV and PELV installations, electromedical installations, transportable structures and vehicles and marinas, etc. Guidance on these electrical installations can be obtained from Section 7 and the specific installation Standards referenced in Clause 7.8.

2 In New Zealand, attention is drawn to the requirements of NZECP 55 for wiring and fittings located near conductive thermal insulation. NZ

8.1.3 Periodic inspection and testing

* Periodic inspection and testing of electrical installations shall be performed. Such inspection and testing needs to be performed in accordance with the requirements of—

(i) the regulatory authority; and

(ii) the owner or occupier of the premises.

COPYRIGHT

auto login of Electrical Workers Licensing Group is licenced to temporarily download this document.
Electrical Workers Licensing Group may print this document but not more than 10% of the documents subscribed to may be held in printed form at any one time.

Copyright Standards New Zealand

NOTE: Recommended periodic testing arrangements are set out in AS/NZS 3019.

8.2 VISUAL INSPECTION

8.2.1 General

A visual inspection shall be made when work on an electrical installation has been completed in order to verify that the work complies with the requirements of this Standard.

The visual inspection shall be carried out before, or in association with, testing. The visual inspection should, where practicable, be made before the relevant part of the electrical installation is placed in service.

Exception: Where the visual inspection of a part of the electrical installation is not practicable at the completion of the work, e.g. not accessible because of enclosure in the building structure, consideration should be given to inspecting that part during the course of the installation.

8.2.2 Checklist

The following items shall be checked, where applicable during the visual inspection, to assess that the relevant requirements of this Standard are satisfied:

(a) *General*:

(i) Basic protection (protection against direct contact with live parts), e.g. insulation and enclosure.

(ii) Fault protection (protection against indirect contact with exposed conductive parts), e.g. by the use of automatic disconnection of supply, double insulation or isolating transformers.

(iii) Protection against hazardous parts, e.g. enclosure, guarding or screening of flammable materials, hot surfaces and parts that may cause physical injury.

(iv) Protection against spread of fire, e.g. penetration of fire barriers.

(v) General condition of the electrical equipment, e.g. signs of damage that could impair safe operation, disconnection of unused electrical equipment.

(b) *Consumer mains*:

(i) Current-carrying capacity.

(ii) Voltage drop, e.g. size of conductors.

(iii) Underground installation conditions, e.g. enclosure, depth of burial, mechanical protection.

(iv) Aerial installation conditions.

(v) Connection of wiring.

COPYRIGHT

auto login of Electrical Workers Licensing Group is licenced to temporarily download this document.
Electrical Workers Licensing Group may print this document but not more than 10% of the documents subscribed to may be held in printed form at any one time.

Copyright Standards New Zealand

(vi) Protection against external influences.

(c) *Switchboards*:

(i) Location, e.g. access and egress.

(ii) Protective devices, e.g. selection and setting of adjustable protective devices for compliance with overcurrent protection, arc fault protection and discrimination requirements.

(iii) Isolating devices, e.g. main switches.

(iv) Connecting devices, e.g. neutral bars, earth bars and active links.

(v) Connection and fixing of wiring and switchgear.

(vi) Identification and labelling of electrical equipment.

(vii) Protection against external influences.

(d) *Wiring systems*:

(i) Conductor size, e.g. current-carrying capacity and voltage drop.

(ii) Identification of cable cores.

(iii) Adequate support and fixing.

(iv) Connections and enclosures.

(v) Particular installation conditions, e.g. underground, aerial, safety services.

(vi) Segregation from other services and electrical installations.

(vii) Protection against external influences, e.g. enclosure.

(e) *Electrical equipment*:

(i) Isolation and switching devices for protection against injury from mechanical movement devices and motors.

(ii) Isolation and switching devices for protection against thermal effects, e.g. motors, room heaters, water heaters.

(iii) Switching devices for particular electrical equipment, e.g. socket-outlets, water heaters, etc.

(iv) Particular installation conditions, e.g. locations affected by water, explosive atmospheres, extra-low voltage, high voltage.

(v) Compliance with required Standard.

(vi) Connection, support and fixing.

* (vii) Protection against external influences including ingress of moisture where required by any clause.

* (viii) Suitability for intended voltage, current and frequency.

Electrical Workers Licensing Group is licenced to temporarily download this document.
auto login of Electrical Workers Licensing Group may print this document but not more than 10% of the documents subscribed to may be held in printed form at any one time.

Copyright Standards New Zealand

COPYRIGHT

NOTES:

A1 1 An RCD is deemed suitable for operation under residual alternating current and residual pulsating direct current conditions if it is marked with one of the symbols cited in Clause 2.6.2.2.1 Note 1 Items (b) to (e). If the marking is not clearly legible, the RCD should be replaced prior to testing.

* 2 Appendix Q contains further guidance for DC circuits.

(f) *Earthing*:

(i) MEN connection.

(ii) Earth electrode.

(iii) Earthing conductors, e.g. size, identification.

(iv) Equipotential bonding conductors, e.g. size, identification.

(v) Connections, joints and terminations.

(vi) Protection against external influences.

(vii) Connection to earthing arrangements for other systems.

(viii) Creation of earthed situation that may require earthing of additional electrical equipment.

8.3 TESTING

8.3.1 General

After completion of, or in association with, the visual inspection, tests shall be carried out in accordance with Clause 8.3.3 on the electrical installation to verify that it complies with the requirements of this Standard and that it is suitable for the use intended.

If necessary, additional tests may be carried out.

8.3.2 Test methods

A2 **8.3.2.1** *General*

* AS/NZS 3017 sets out common test methods that may be used to verify by testing that a low voltage electrical installation complies with this Standard, and also includes minimum safety standards for test instruments.

* Testing shall be carried out in such a manner that the safety of the operator and other people in the vicinity, and test equipment is not placed at risk.

NOTE: The test methods set out in this Clause (Clause 8.3) are given as reference methods. Other methods are not precluded, provided that they give equally valid results.

A2 **8.3.2.2** *Recording of results*

It is recommended that the results of the tests, especially tests that require a value for verification be recorded and maintained.

COPYRIGHT

Copyright Standards New Zealand

auto login of Electrical Workers Licensing Group is licenced to temporarily download this document.
Electrical Workers Licensing Group may print this document but not more than 10% of the documents subscribed to may be held in printed form at any one time.

A2 NOTE: Legislative requirements may be made in each State or Territory of Australia or New Zealand relating to the format and contents of test records.

8.3.3 Mandatory tests

8.3.3.1 *Low voltage*

* **Testing shall be carried out on parts of electrical installations designed to operate at low voltage as follows:**

(a) Continuity of the earthing system (earth resistance of the main earthing conductor, protective earthing conductors, PEN conductors and bonding conductors), in accordance with Clause 8.3.5.

(b) Insulation resistance, in accordance with Clause 8.3.6.

(c) Polarity, in accordance with Clause 8.3.7.

(d) Correct circuit connections, in accordance with Clause 8.3.8.

(e) Verification of impedance required for automatic disconnection of supply (earth fault-loop impedance), in accordance with Clause 8.3.9.

(f) Operation of RCDs, in accordance with Clause 8.3.10.

* *Exception: Verification of earth fault loop impedance may be omitted where automatic disconnection of supply (refer to Clause 1.5.5.2) is not the method used to provide fault protection.*

NOTES:

1 Item (e) above may require that supply is available.

2 Item (f) above requires that supply is available.

A1 3 Additional tests for isolated supplies are detailed in Clause 7.4.8.

8.3.3.2 *Extra-low voltage*

Testing shall be carried out on parts of electrical installations designed to operate at extra-low voltage as follows:

(a) Continuity of the earthing system for PELV circuits in accordance with Clause 8.3.5.

(b) Insulation resistance in accordance with Clause 7.5.12.

(c) Polarity for PELV circuits in accordance with Clause 8.3.7.

(d) Correct circuit connections in accordance with Clause 8.3.8.

8.3.3.3 *Test failures*

* **If any part of the electrical installation fails a test, that test and any preceding tests that may have been influenced by the fault indicated shall be repeated after the fault has been rectified.**

8.3.4 Sequence of tests

A testing sequence is shown in Figure 8.1.

COPYRIGHT

Electrical Workers Licensing Group is licenced to temporarily download this document.
auto login of Electrical Workers Licensing Group may print this document but not more than 10% of the documents subscribed to may be held in printed form at any one time.

Copyright Standards New Zealand

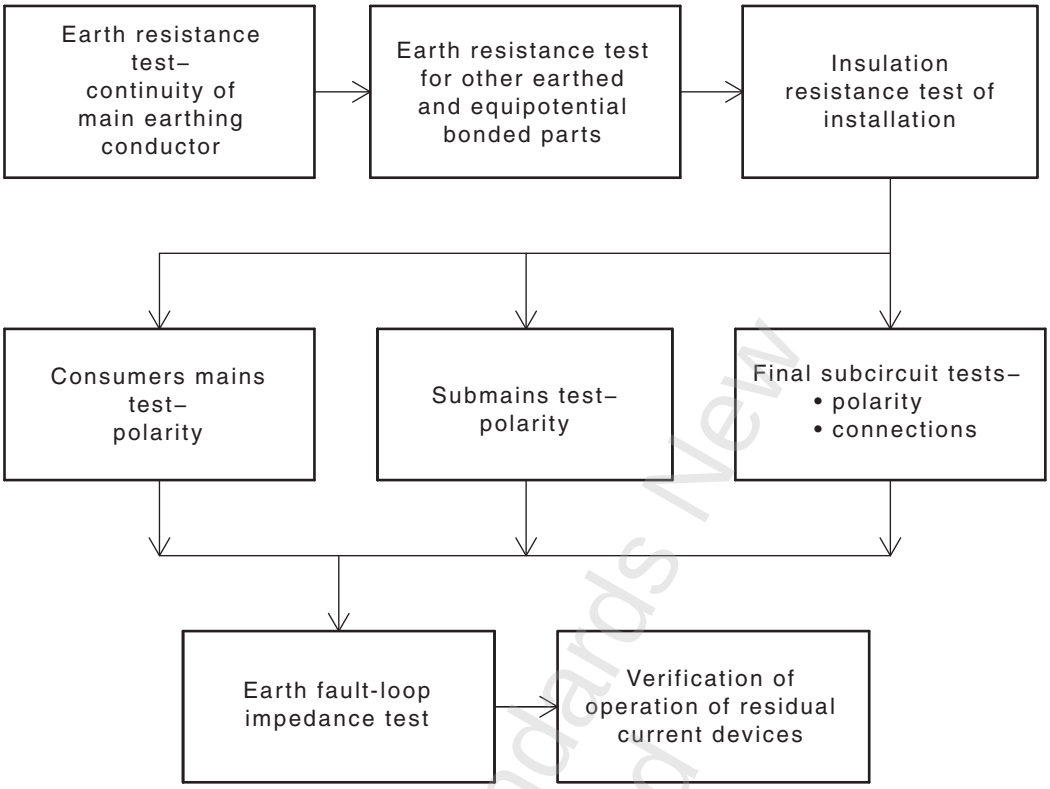

FIGURE 8.1 TESTING SEQUENCE

8.3.5 Continuity of the earthing system

8.3.5.1 *General*

Testing to prove the continuity of the earthing system (earth resistance of the main earthing conductor, protective earthing conductors, combined protective earthing and neutral (PEN) conductors and bonding conductors) shall be carried out to ensure that the earthing system has been installed in a manner that will cause circuit protective devices to operate if there is a fault between live parts, other than the neutral, and the mass of earth.

An effective earthing system will ensure that exposed conductive parts of electrical equipment do not reach dangerous voltages when such faults occur.

* Where a PEN submain is installed in accordance with Clause 5.5.3.1(c), testing shall confirm that the earth terminal, point or bar of the sub-board is connected via the PEN conductor to the earth terminal, point or bar of the main switchboard.

8.3.5.2 *Results*

The resistance of protective earthing conductors shall be—

(a) low enough to permit the passage of current necessary to operate the overcurrent protective device; and

COPYRIGHT

Copyright Standards New Zealand

auto login of Electrical Workers Licensing Group is licenced to temporarily download this document.
Electrical Workers Licensing Group may print this document but not more than 10% of the documents subscribed to may be held in printed form at any one time.

(b) consistent with the length, cross-sectional area and type of conductor material.

The resistance of the main earthing conductor or any equipotential bonding conductor shall be not more than 0.5 Ω.

NOTES:

1 Under the subsequent tests for earth fault-loop impedance, the maximum allowable resistance of the protective earthing conductor associated with any particular circuit depends on the type and rating of the protective device and the impedance of the live conductors that comprise the circuit.

2 Resistance values (R_e) for earthing conductors are given in Table 8.2 as a function of the rating of the associated overcurrent protective device. These values may be used when testing for earth continuity.

8.3.6 Insulation resistance

8.3.6.1 *General*

Insulation resistance testing shall be carried out to ensure that the insulation resistance between all live conductors and earth or, as the case may be, all live parts and earth, is adequate to ensure the integrity of the insulation. This testing is to prevent—

(a) electric shock hazards from inadvertent contact;

(b) fire hazards from short-circuits; and

(c) equipment damage.

In addition, an insulation resistance test between conductors is necessary for consumer mains and submains to minimize risk of injury or property damage because of insulation breakdown.

8.3.6.2 *Method*

The integrity of the insulation is stressed by applying a direct current at 500 V for low voltage circuits.

Exceptions:

1 Where equipment, such as electromagnetic compatibility (EMC) filters, equipment containing surge protective devices connected to earth, or electronic equipment, is likely to be damaged by the test—

- *such equipment may be disconnected or switched off before carrying out the insulation resistance test on the circuit; or*
- *the test voltage for the particular circuit may be reduced to 250 V d.c.*

2 Where connected equipment, such as sheathed heating elements of appliances or an RCD with an FE connection, is likely to influence the verification test, the equipment may be disconnected before carrying out the insulation resistance test on the circuit and the equipment tested separately.

COPYRIGHT

Copyright Standards New Zealand

auto login of Electrical Workers Licensing Group is licenced to temporarily download this document.
Electrical Workers Licensing Group may print this document but not more than 10% of the documents subscribed to may be held in printed form at any one time.

The insulation resistance tester used shall be able to maintain its terminal voltage within +20% and −10% of the nominal open circuit terminal voltage, when measuring a resistance of 1 MΩ on the 500 V range or 10 MΩ on the 1000 V range.

8.3.6.3 *Results*

The insulation resistance between—

(a) the conductors of consumer mains and submains; and

(b) live and earthed parts of an electrical installation, or parts thereof, including consumer mains and submains,

shall be not less than 1 MΩ.

* *Exceptions:*

Acceptable insulation resistance values for items likely to adversely affect test results are as follows:

1 For sheathed heating elements of appliances; not less than 0.01 MΩ.

2 A value permitted in the Standard applicable to the electrical equipment.

3 For functional earth connections of RCDs; not less than 0.05 MΩ, or as prescribed by the manufacturer.

NOTES:

* 1 For shorter cable runs, the insulation resistance should be significantly greater than 1 MΩ, e.g. for polymeric cables up to 50 m a value in excess of 50 MΩ would be expected.

* 2 Insulation resistance varies with insulation materials, and decreases with increased length and/or higher temperature.

* 3 PVC insulated cables with a route length of 50 m can be expected to have insulation resistances of at least 20 MΩ at a temperature not exceeding 20°C but only 6 MΩ at a temperature of 30°C.

* 4 XLPE insulated cables can be expected to have insulation resistance of at least 1500 MΩ for a route length of 50 m.

A2

8.3.7 Polarity and correct circuit connections

8.3.7.1 *General*

This testing is to prevent—

(a) the transposition of active and neutral conductors of the consumer mains, or submains supplying an outbuilding having an MEN connection, resulting in the electrical installation earthing system becoming energized; and

(b) combinations of incorrect active, neutral and earthing conductor connections, resulting in the exposed conductive parts of the electrical installation becoming energized; and

auto login of Electrical Workers Licensing Group is licenced to temporarily download this document.
Electrical Workers Licensing Group may print this document but not more than 10% of the documents subscribed to may be held in printed form at any one time.

Copyright Standards New Zealand

A2

(c) the connection of switches or protective devices in neutral conductors, resulting in parts of appliances, such as heating elements and lampholders, remaining energized when the switches are in the “OFF” position; and

(d) multiphase equipment, such as multiphase motors, and semiconductor-controlled equipment operating in an unpredictable manner; and

(e) protective earthing conductors carrying current under normal conditions of operation; and

NOTE: For purposes of this Clause, a PEN conductor is not regarded as a protective earthing conductor (PEC).

(f) short-circuits existing between conductors.

NOTE: A short-circuit current flowing between live conductors or through part of the earthing system can cause considerable fire damage or personal injury, particularly in high current locations.

8.3.7.2 *Results*

The polarity and correct circuit connection testing shall show that all active, neutral and protective earthing conductors in the electrical installation are correctly connected to the corresponding terminals of electrical equipment so that—

(a) there is no transposition of conductors that could result in the electrical equipment becoming unsafe when it is connected to supply, particularly where appliances are connected by socket-outlets; and

(b) switches or protective devices do not operate in the earthing or a combined protective earthing and neutral (PEN) conductor; and

(c) switches or protective devices do not operate independently in neutral conductors; and

(d) all Edison screw lampholders that are not incorporated in an appliance or provided with a shroud or skirt that prevents contact with the outer contact shall have the neutral connected to the outer contact; and

(e) all fixed socket-outlets for multiphase supplies are connected so the phase sequence is the same throughout the installation; and

(f) no protective earthing conductor is connected in parallel with any neutral conductor; and

(g) there are no short-circuit/s between the conductors; and

(h) there are no interconnection of conductors between different circuits.

NOTE: Any MEN or ESR connection is not considered as a short-circuit.

8.3.8 'Text deleted'

auto login of Electrical Workers Licensing Group is licenced to temporarily download this document.
Electrical Workers Licensing Group may print this document but not more than 10% of the documents subscribed to may be held in printed form at any one time.

Copyright Standards New Zealand

8.3.9 Verification of earth fault-loop impedance (EFLI)

8.3.9.1 *Low voltage socket-outlet circuits*

Where an installation includes circuits satisfying (a), (b) and (c) below, EFLI testing, in accordance with Clause 8.3.9.2, shall be carried out for those circuits:

(a) Fault protection is by automatic disconnection of supply.

(b) Supplying one or more socket-outlets.

(c) Where socket-outlets are not protected by a residual current device with a residual current rating of 30 mA or less.

NOTES:

* 1 The tests described in Clause 8.3.9.2 are carried out in order to verify that the protective device will operate to disconnect an earth fault current within the time and touch voltage requirements of Clauses 5.7 and 1.5.5.3.

* 2 Further information on the earth fault-loop impedance is contained in Appendix B, Paragraph B4 and Clause 5.7.

* 3 EFLI testing is not required for RCD-protected socket-outlets, as the maximum operating time of RCDs providing additional protection is less than the 0.4 s specified by Clause 5.7.2, Item (a) and Clause 1.5.5.3, Item (d).

* 4 EFLI testing is not required for socket-outlets on separated supplies because for these circuits fault protection is not by automatic disconnection.

* 5 EFLI testing is not specifically required for circuits supplying equipment other than socket-outlets because of the risk of electric shock when performing the test on live electrical equipment. For a circuit supplying other than socket-outlets, the longer permitted operating time combined with verification of earth continuity in accordance with Clause 8.3.5.2, is considered to adequately verify compliance with Clause 5.7.

* 6 While EFLI testing is not required for other circuits, the maximum trip time requirement still has to be complied with. In most cases, if voltage drop requirements are complied with, the EFLI will be acceptable.

8.3.9.2 *Methods*

8.3.9.2.1 *General*

One of the following methods (Clause 8.3.9.2.2 or 8.3.9.2.3) shall be used, depending on availability of supply.

8.3.9.2.2 *Supply available*

A1 Where supply is available, the earth fault-loop impedance for each branch of each final subcircuit shall be determined using an earth fault-loop impedance tester at the socket-outlet furthest from the supply on each branch of the final subcircuit.

The MEN connection shall be left intact.

auto login of Electrical Workers Licensing Group is licenced to temporarily download this document.
Electrical Workers Licensing Group may print this document but not more than 10% of the documents subscribed to may be held in printed form at any one time.

Copyright Standards New

8.3.9.2.3 *No supply available*

Where no supply is available, the total resistance (R_{phe}) of the active and protective earthing conductors of the circuit shall be measured using an ohmmeter.

Each active conductor in turn and the protective earthing conductor shall be connected together at the origin of the circuit (normally where the protective device is fitted). The resistance of each active-PEC pair shall be determined using an ohmmeter at the furthest point of each branch of the circuit.

NOTES:

1 Where supply is available and the electrical installation is connected to a distribution system, the earth fault-loop impedance test is preferred in order to verify the complete earth fault-loop including the integrity of the MEN connection and the supply neutral (PEN) conductors.

2 Where no supply is available, the resistance method establishes the contribution of the final subcircuit to the total impedance of the full earth fault loop.

3 Reference to voltage drop values are in Table B1.

8.3.9.3 *Results*

The values obtained shall satisfy the requirements of Clause 5.7.4.

This requirement is deemed to be satisfied if—

(a) the earth fault-loop impedance, measured in accordance with Clause 8.3.9.2.2, does not exceed the value shown in Table 8.1 for the applicable type and rating of the protective device; or

(b) the total resistance (R_{phe}) of the of the active and protective earthing conductors, measured in accordance with Clause 8.3.9.2.3 does not exceed the value shown in Table 8.2 for the applicable circuit protection rating and required disconnection time.

NOTES:

1 The values of Z_s in Table 8.1 were calculated as shown in Paragraph B4.5.

2 The values in Table 8.2 were calculated using the d.c. resistance values for conductors at 20°C, as specified in AS/NZS 1125, and the maximum circuit lengths given in Table B1.

auto login of Electrical Workers Licensing Group is licenced to temporarily download this document.
Electrical Workers Licensing Group may print this document but not more than 10% of the documents subscribed to may be held in printed form at any one time.

Copyright Standards New Zealand

TABLE 8.1

MAXIMUM VALUES OF EARTH FAULT-LOOP IMPEDANCE FOR THE TOTAL CIRCUIT INCLUDING THE SUPPLY TRANSFORMER (Z_s AT 230 V) VALUES RELATING TO OPERATION OF PROTECTIVE DEVICES ON THE FINAL SUBCIRCUIT

Protective device rating Amps	MCBs on the final subcircuit			Fuses on the final subcircuit	
	Type B	Type C	Type D		
	Disconnection times				
	0.4 s			0.4 s	5 s
	Maximum earth fault-loop impedance Z_s Ω				
6	9.6	5.1	3.1	11.5	15.3
10	5.8	3.1	1.8	6.4	9.2
16	3.6	1.9	1.2	3.1	5.0
20	2.9	1.5	0.9	2.1	3.6
25	2.3	1.2	0.7	1.6	2.7
32	1.8	1.0	0.6	1.3	2.2
40	1.4	0.8	0.5	1.0	1.6
50	1.2	0.6	0.4	0.7	1.3
63	0.9	0.5	0.3	0.6	0.9
80	0.7	0.4	0.2	0.4	0.7
100	0.6	0.3	0.2	0.3	0.5
125	0.5	0.2	0.1	0.2	0.4
160	0.4	0.2	0.1	0.2	0.3
200	0.3	0.2	0.1	0.1	0.2

NOTES:

* 1 Refer to AS/NZS 3017 for EFL tester tolerances. Refer to Table B1 for circuit route lengths of final subcircuits up to 200 A.

* 2 Refer to Paragraph B4.5 for MCB data used in these calculations.

* 3 MCB selection is based on instantaneous (0.1 s max) operation using the mean of the tripping value.

* 4 Refer to IEC 60269 and manufacturer's date for fuse curve limits (mean values are used in these calculations).

* 5 Refer to Clauses 1.5.5.3 and 5.7.2 and Figure B4 for required disconnection times and conditions, e.g. Condition for 5s disconnection time.

Copyright Standards New Zealand

auto login of Electrical Workers Licensing Group is licenced to temporarily download this document.
Electrical Workers Licensing Group may print this document but not more than 10% of the documents subscribed to may be held in printed form at any one time.

TABLE 8.2

MAXIMUM VALUES OF RESISTANCE OF FINAL SUBCIRCUITS AT 80% RATED CURRENT RELATING TO Z_s IMPEDANCE VALUES IN TABLE 8.1

A1

Protective device rating, amps	Conductor size		Circuit breakers						Fuses			
			Disconnection times									
			0.4 s						0.4 s		5.0 s	
	Active mm²	Earth mm²	Type B MCB		Type C MCB		Type D MCB		HRC fuses			
			R_{phe}	R_e	R_{phe}	R_e	R_{phe}	R_e	R_{phe}	R_e	R_{phe}	R_e
			Maximum final subcircuit resistance, Ω									
6	1.0	1.0	6.1	3.1	3.3	1.6	2.0	1.0	7.4	3.7	9.8	4.9
10	1.0	1.0	3.7	1.8	2.0	1.0	1.2	0.6	4.1	2.0	5.9	2.9
10	1.5	1.5	3.7	1.8	2.0	1.0	1.2	0.6	4.1	2.0	5.9	2.9
16	1.5	1.5	2.3	1.2	1.2	0.6	0.7	0.4	2.0	1.0	3.2	1.6
16	2.5	2.5	2.3	1.2	1.2	0.6	0.7	0.4	2.0	1.0	3.2	1.6
20	2.5	2.5	1.8	0.9	1.0	0.5	0.6	0.3	1.3	0.7	2.3	1.1
25	4.0	2.5	1.5	0.9	0.8	0.5	0.5	0.3	1.0	0.6	1.7	1.1
32	4.0	2.5	1.2	0.7	0.6	0.4	0.4	0.2	0.8	0.5	1.4	0.9
40	6.0	2.5	0.9	0.6	0.5	0.3	0.3	0.2	0.6	0.4	1.0	0.7
50	10.0	4.0	0.7	0.5	0.4	0.3	0.2	0.2	0.5	0.3	0.8	0.6
63	16.0	6.0	0.6	0.4	0.3	0.2	0.2	0.1	0.4	0.3	0.6	0.4

NOTES:

* 1 The values, which have been rounded to one decimal place, are calculated using R_{phe} as 64% × Z_s in Table 8.1.

* 2 64% takes into account deemed reduction values of 80% × Z_s (typical value for the final subcircuit) × 80% assumes that conductor temperature for Z_s at rated current is 70°C and for tests at no load current is 20°C).

* 3 Table B1 gives earth fault loop route lengths for final subcircuits will satisfy the requirements of Clauses 1.5.5.3, 5.7 and 8.3.9 for automatic disconnection of supply for the conditions of Paragraph B5.2.2. These values comply with Table 8.2 and may be used as an alternative to resistance values.

* 4 In addition, Table B1 also includes final subcircuit route length for voltage drops complying with Clause 3.6.2.

* 5 To comply with both earth fault loop and voltage drop route length the shortest route length is required.

8.3.10 Operation of RCDs

* To verify that RCDs have been correctly installed, tests shall be performed on all RCDs.

* The function of the RCD shall be verified either by the operation of the integral test device, or by the use of special test equipment.

* In all cases, isolation of all switched poles shall be verified after the RCD has operated to disconnect the designated circuit.

* Isolation of all poles shall be verified by voltage tests or, after removing supply, by continuity checks through each pole.

COPYRIGHT

Electrical Workers Licensing Group may print this document but not more than 10% of the documents subscribed to may be held in printed form at any one time.
auto login of Electrical Workers Licensing Group is licenced to temporarily download this document.

Copyright Standards New Zealand

A2 *'Text deleted'*

NOTES:

1 Tripping the RCD by means of the integral test device establishes—

(a) the RCD is functioning correctly; and

(b) the integrity of the electrical and mechanical elements of the tripping device.

2 Operation of the integral test device does not provide a means of checking—

(a) the continuity of the main earthing conductor or the associated circuit protective earthing conductors;

(b) any earth electrode or other means of earthing; or

(c) any other part of the associated electrical installation earthing.

* 3 Guidance on the suitability of types of RCD is contained in Clause 2.6.2.2.

* 4 There is no requirement to test the operating time of RCDs. Operating time is a function of the type of RCD.

* 5 A suitable test could be performed using a test plug with a resistor between the active and earth pins.

8.4 VERIFICATION RECORDS

* The date of initial certification of an installation shall be available on-site, by permanent, indelible marking on or at the main switchboard.

NOTE: In order to enable reverification, it is necessary to know the details of the original verification. This will facilitate the operation of a reverification regime, when instituted.

Copyright Standards New Zealand

auto login of Electrical Workers Licensing Group is licenced to temporarily download this document.
Electrical Workers Licensing Group may print this document but not more than 10% of the documents subscribed to may be held in printed form at any one time.

auto login of Electrical Workers Licensing Group is licenced to temporarily download this document.
Electrical Workers Licensing Group may print this document but not more than 10% of the documents subscribed to may be held in printed form at any one time.

APPENDIX A

REFERENCED DOCUMENTS

(Informative)

The following documents are referenced in this Standard:

AS	
1074	Steel tubes and tubulars for ordinary service
1359	Rotating electrical machines—General requirements (series)
1418	Cranes (including hoists and winches) (series)
1530	Methods for fire tests on building materials, components and structures
1530.4	Part 4 Fire-resistance test of elements of construction
1670	Fire detection, warning, control and intercom systems—System design, installation and commissioning (series)
1720	Timber structures (series)
1735	Lifts, escalators and moving walks (series)
2067	Substations and high voltage installations exceeding 1 kV a.c.
2118	Automatic fire sprinkler systems
2118.1	Part 1: General systems
2209	Timber—Poles for overhead lines
2293	Emergency escape lighting and exit signs for buildings (series)
2419	Fire hydrant installations
2419.1	Part 1: System design, installation and commissioning
2441	Installation of fire hose reels
2941	Fixed fire protection installations—Pumpset systems
3011	Electrical installations—Secondary batteries installed in buildings
3011.1	Part 1: Vented cells
3011.2	Part 2: Sealed cells
3124	Approval and test specification for overhead line connector boxes
3600	Concrete structures
3818	Timber—Heavy structural products—Visually graded
3818.11	Part 11: Utility poles
3999	Bulk thermal insulation—Installation
4154	General access floors (elevated floors)

COPYRIGHT

AS	
4702	Polymeric cable protection covers
60034	Rotating electrical machines (series)
60038	Standard voltages
60146	Semiconductor converters—General requirements and line commutated converters (series)

A1 ‘**Text deleted**’

60529	Degrees of protection provided by enclosures (IP Code)
60890	A method of temperature-rise assessment by extrapolation for partially type-test assemblies (PTTA) of low-voltage switchgear and controlgear (IEC 60890, Ed. 1.0 (1987) MOD)
60974	Arc welding equipment
60974.1	Part 1 Welding power sources (IEC 60974-1:2000, MOD)
62040	Uninterruptible power systems (UPS) (series)
62103	Electronic equipment for use in power installations
AS IEC	
62196	Plugs, socket-outlets, vehicle connectors and vehicle inlets - Conductive charging of electric vehicles
62196.2	Part 2: Dimensional compatibility and interchangeability requirements for A.C. pin and contact-tube accessories
AS/CA	
S009	Installation requirements for customer cabling (Wiring Rules)
HB 331	Overhead line design
AS/NZS	
1125	Conductors in insulated electric cables and flexible cords
1668	The use of ventilation and air conditioning in buildings
1668.1	Part 1: Fire and smoke control in buildings
1735	Lifts, escalators and moving walks
1735.18	Part 18: Passenger lifts for private residence—Automatically controlled
1768	Lightning protection
2053	Conduits and fittings for electrical installations
2053.1	Part 1: General requirements
2053.2	Part 2: Rigid plain conduits and fittings of insulating material
2053.4	Part 4: Flexible plain conduits and fittings of insulating material

auto login of Electrical Workers Licensing Group is licenced to temporarily download this document.
Electrical Workers Licensing Group may print this document but not more than 10% of the documents subscribed to may be held in printed form at any one time.

Copyright Standards New Zealand

AS/NZS		
2053.5	Part 5:	Corrugated conduits and fittings of insulating material
2053.6	Part 6:	Profile-wall, smooth-bore conduits and fittings of insulating material
2589	Gypsum linings—Application and finishing	
2648	Underground marking tape	
2648.1	Part 1:	Non-detectable tape
2785	Suspended ceilings—Design and installation	
3001	Electrical installations—Transportable structures and vehicles including their site supplies	
3002	Electrical installations—Shows and carnivals	
3003	Electrical installations—Patient areas	
3004	Electrical installations—Marinas and boats	
3004.1	Part 1:	Marinas
3004.2	Part 2:	Boat installations
3007	Electrical installations—Surface mines and associated processing plant	
3008	Electrical installations—Selection of cables	
3008.1.1	Part 1.1:	Cables for alternating voltages up to and including 0.6/1 kV—Typical Australian installation conditions
3008.1.2	Part 1.2:	Cables for alternating voltages up to and including 0.6/1 kV—Typical New Zealand conditions
3009	Electric installations—Emergency power supplies in hospitals	
3010	Electrical installations—Generating sets	
3012	Electrical installations—Construction and demolition sites	
3013	Electrical installations—Classification of the fire and mechanical performance of wiring system elements	
3014	Electrical installations—Electric fences	
3015	Electrical installations—Extra-low voltage d.c. power supplies and service earthing within public telecommunications networks	
3016	Electrical installations—Electric security fences	
3017	Electrical installations—Verification guidelines	
3019	Electrical installations—Periodic verification	
3080	Information technology—Generic cabling for customer premises (ISO/IEC 11801:2011, MOD)	

auto login of Electrical Workers Licensing Group is licenced to temporarily download this document.
Electrical Workers Licensing Group may print this document but not more than 10% of the documents subscribed to may be held in printed form at any one time.

Copyright Standards New Zealand

	AS/NZS	
	3100	Approval and test specification—General requirements for electrical equipment
	3102	Electric duct heaters
A2	3105	Approval and test specification—Electrical portable outlet devices
	3111	Approval and test specification—Miniature overcurrent circuit-breakers
	3112	Approval and test specification—Plugs and socket-outlets
A2	3122	Approval and test specification—Socket-outlet adaptors
	3123	Approval and test specification—Plugs, socket-outlets and couplers for general industrial application
	3131	Approval and test specification—Plugs and socket-outlets for stationary appliances
	3133	Approval and test specification—Air break switches
	3190	Approval and test specification—Residual current devices (current-operated earth-leakage devices)
	3191	Electric flexible cords
	3194	Approval and test specification—Electric shaver supply units
A2	3199	Approval and test specification—Cord extension sets
	3350	Safety of household and similar electrical appliances (series)
	3439	Low-voltage switchgear and controlgear assemblies (series)
	3500	Plumbing and drainage (series)
	3560	Electric cables—Cross-linked polyethylene insulated—Aerial bundled (series)
	3808	Insulating and sheathing materials for electric cables
	3820	Essential safety requirements for electrical equipment
	3947	Low-voltage switchgear and controlgear
	4249	Electrical safety practices–Film, video and television sites
	4296	Cable trunking systems
	4396	Connectors—Insulation piercing—For 0.6/1 kV aerial bundled cables
	4417	Regulatory compliance mark for electrical and electronic equipment (series)
	4509	Stand-alone power systems (series)
	4509.1	Part 1: Safety and installation
	4510	Isolated electrical supply systems for medical use

auto login of Electrical Workers Licensing Group is licenced to temporarily download this document.
Electrical Workers Licensing Group may print this document but not more than 10% of the documents subscribed to may be held in printed form at any one time.

Copyright Standards New Zealand

	4676	Structural design requirements for utility service poles
	4677	Steel utility services poles
	4763	Safety of portable inverters
	AS/NZS 4777	Grid connection of energy systems via inverters (series)
	4777.1	Part 1: Installation requirements
	4836	Safe working on or near low-voltage electrical installations and equipment
	4961	Electric cables—Polymeric insulated—For distribution and service applications
	5000	Electric cables—Polymeric insulated (series)
	5033	Installation and safety requirements for photovoltaic (PV) arrays
	5110	Recessed luminaire barriers
	5112	Tunnel type terminal neutral bars for low voltage switchboards—Requirements for termination of copper conductors up to 50 mm^2
A1	5139	Electrical installations—Safety of battery systems for use with power conversion equipment
	5601	Gas installations
	5601.1	Part 1: General installations
	7000	Overhead line design
	60079	Explosive atmospheres (series)
	60079.0	Part 0: General requirements
	60079.10.1	Part 10.1: Classification of areas—Explosive gas atmospheres
	60079.10.2	Part 10.2: Classification of areas—Combustible dust atmospheres
	60079.14	Part 14: Electrical installations design, selection and erection
	60079.17	Part 17: Electrical installations inspection and maintenance
	60335	Household and similar electrical appliances—Safety
	60335.2.41	Part 2.41: Particular requirements for pumps (IEC 60335-2-41 Ed 4, MOD)
	60335.2.76	Part 2.76: Particular requirements for electric fence energizers (IEC 60335-2-76, Ed. 2.2 MOD)
	60479	Effects of current on human beings and livestock (series)
	60598	Luminaires

auto login of Electrical Workers Licensing Group is licenced to temporarily download this document.
Electrical Workers Licensing Group may print this document but not more than 10% of the documents subscribed to may be held in printed form at any one time.

Copyright Standards New Zealand

60598.1	Part 1:	General requirements and tests (IEC 60598-1 Ed. 8.0 (2014) MOD)
60598.2.2	Part 2.2:	Particular requirements—Recessed luminaires (IEC 60598-2-2 Ed. 3.0 (2011) MOD)
AS/NZS		
60669		Switches for household and similar fixed electrical installations
60669.1	Part 1:	General requirements (IEC 60669-1, Ed. 3.2 (2007) MOD)
60702		Mineral insulated cables and their terminations with a rated voltage not exceeding 750 V
60702.1	Part 1:	Cables
60884		Plugs and socket-outlets for household and similar purposes
60884.1	Part 1:	General requirements (IEC 60884-1, Ed. 3.1 (2006) MOD)
60890		A method of temperature-rise assessment by extrapolation for partially type-test assemblies (PTTA) of low-voltage switchgear and controlgear
60898		Electrical accessories—Circuit-breakers for overcurrent protection for household and similar installations
60898.1	Part 1:	Circuit-breakers for a.c. operation (IEC 60898-1, Ed. 1.2 (2003) MOD)
61008		Residual current operated circuit-breakers without integral overcurrent protection for household and similar uses (RCCBs)
61008.1	Part 1:	General rules (IEC 61008-1, Ed. 3.2 (2013) MOD)
61009		Residual current operated circuit-breakers with integral overcurrent protection for household and similar uses (RCBOs)
61009.1	Part 1:	General rules (IEC 61009-1, Ed. 3.2 (2013) MOD)
61058		Switches for appliances
61058.1	Part 1:	General requirements (IEC 61058-1, Ed. 3.1 (2000) MOD)
61386		Conduit systems for cable management (series)
61439		Low-voltage switchgear and controlgear assemblies (series)
61535		Installation couplers intended for permanent connection in fixed installations (IEC 61535, Ed. 1.0 (2009) MOD)
61558		Safety of power transformers, power supply units and combinations thereof (series)
AS/NZS IEC		
60947		Low-voltage switchgear and controlgear
60947.2	Part 2:	Circuit-breakers

COPYRIGHT

auto login of Electrical Workers Licensing Group is licenced to temporarily download this document.
Electrical Workers Licensing Group may print this document but not more than 10% of the documents subscribed to may be held in printed form at any one time.

Copyright Standards New Zealand

60947.3	Part 3:	Switches, disconnectors, switch-disconnectors and fuse-combination units
60947.4.1	Part 4.1:	Contactors and motor-starters—Electromechanical contactors and motor-starters
AS/NZS IEC		
60947.4.2	Part 4.2:	Contactors and motor-starters—A.C. semiconductor motor controllers and starters
60947.8	Part 8:	Control units for built-in thermal protection (PTC) for rotating electrical machines
IEC		
60038	Standard voltages	
60269	Low-voltage fuses (series)	
A1 60269-1	Part 1:	General requirements
60309	Plugs, socket-outlets and couplers for industrial purposes (series)	
60364	Low-voltage electrical installations	
60364-4-41	Part 4-41:	Protection for safety – Protection against electric shock
60364-4-43	Part 4-43:	Protection for safety – Protection against overcurrent
60364-4-44	Part 4-44:	Protection for safety – Protection against voltage disturbances and electromagnetic disturbances
60364-5-52	Part 5-52:	Selection and erection of electrical equipment—Wiring systems
60439	Low-voltage switchgear and controlgear assemblies (series)	
61851	Electric vehicle conductive charging system	
61851-21	Part 21:	Electric vehicle requirements for conductive connection to an a.c./d.c. supply
62262	Degrees of protection provided by enclosures for electrical equipment against external mechanical impacts (IK code)	
62423	Type F and type B residual current operated circuit-breakers with and without integral overcurrent protection for household and similar uses	
62606	General requirements for arc fault detection devices	
62640	Residual current devices with or without overcurrent protection for socket-outlets for household and similar uses	
A1 62955	Residual direct current detecting device (RDC-DD) to be used for mode 3 charging of electric vehicles	
IEC TS		
61439	Low-voltage switchgear and controlgear assemblies	

Electrical Workers Licensing Group may print this document but not more than 10% of the documents subscribed to may be held in printed form at any one time.
auto login of Electrical Workers Licensing Group is licenced to temporarily download this document.

Copyright Standards New Zealand

61439-7 Part 7: Assemblies for specific applications such as marinas, camping sites, market squares, electric vehicles charging stations

IEC TR
60083 Plugs and socket-outlets for domestic and similar general use standardized in member countries of IEC

61641 Enclosed low-voltage switchgear and controlgear assemblies—Guide for testing under conditions of arcing due to internal fault

A1 '**Text deleted**'

NZS
3104 Specification for concrete production

3603 Timber Structures Standard

3604 Timber-framed buildings

4246 Energy efficiency—Installing bulk thermal insulation in residential buildings

4510 Fire hydrant systems for buildings

4512 Fire detection and alarm systems in buildings

4515 Fire sprinkler systems for residential occupancies

4517 Fire sprinkler systems for houses

4541 Automatic fire sprinkler systems

4676 Structural design requirements for utility services poles

6110 Electrical installations—Floor and ceiling heating systems

6115 Electrical installations—Mobile medical facilities

BS
1363-2 13 A plugs, socket-outlets, adaptors and connection units. Specification for 13 A switched and unswitched socket-outlets

Australian Building Code Board (ABCB)
National Construction Code (Australia)
NCC Volume One Energy Efficiency Provisions

Australian Maritime Safety Authority
National Marine Safety Committee, National Standard for Commercial Vessels

Energy Networks Australia (ENA)
Handbook for overhead line design

National Standard for Commercial Vessels (NSCV)
C 5B Part C: Design and construction—Section 5: Engineering—Subsection 5B: Electrical

COPYRIGHT

Copyright Standards New Zealand

auto login of Electrical Workers Licensing Group is licenced to temporarily download this document.
Electrical Workers Licensing Group may print this document but not more than 10% of the documents subscribed to may be held in printed form at any one time.

New Zealand Building Code

New Zealand Ministry of Economic Development
Electricity (Safety) Regulations

New Zealand Telecommunications Forum (TCF)
Premises Wiring Guidelines

Worksafe New Zealand
NZECP 55 New Zealand Electrical Code of Practice for Managing Electrical Risks Associated with Electrically Conductive Thermal Insulation

Guide for electric vehicle charging systems

Copyright Standards New Zealand

auto login of Electrical Workers Licensing Group is licenced to temporarily download this document.
Electrical Workers Licensing Group may print this document but not more than 10% of the documents subscribed to may be held in printed form at any one time.

APPENDIX B

CIRCUIT PROTECTION GUIDE

(Informative)

B1 SCOPE

This Appendix provides an example of the general arrangement of electrical installation circuits and identifies the steps required to determine the essential circuit arrangements that affect conductor size and selection of protective devices.

Guidance is also provided on the following:

(a) Coordination of the characteristics of conductors and protective devices for protection against overload current.

(b) Automatic disconnection of supply to provide fault protection, including determination of maximum earth fault-loop impedance and maximum length of a circuit that will allow a protective device to operate within the specified disconnection time.

B2 CIRCUIT ARRANGEMENTS

The electrical installation is required to be arranged with an appropriate number of independent circuits to different parts, in accordance with Clause 2.2.1.1.

The most common distribution arrangement for a low-voltage electrical installation is radial branched distribution, an example of which is shown in Figure B1.

The steps that should be taken to ensure correct circuit arrangements are as follows:

(a) Determine the required current-carrying capacity, in accordance with the AS/NZS 3008.1 series, for circuit conductors dependent on the method of installation and the presence of external influences.

(b) Determine overcurrent requirements, in accordance with Clause 2.5. Overcurrent includes both overload currents and short-circuit currents (see Paragraph B3).

(c) Determine voltage drop requirements, in accordance with Clause 3.6.

NOTE: Guidance on the calculation of voltage drop is given in the AS/NZS 3008.1 series.

(d) Determine the automatic disconnection of supply requirements, in accordance with Clause 5.7 (see also Paragraphs B4 and B5).

Copyright Standards New Zealand

auto login of Electrical Workers Licensing Group is licenced to temporarily download this document.
Electrical Workers Licensing Group may print this document but not more than 10% of the documents subscribed to may be held in printed form at any one time.

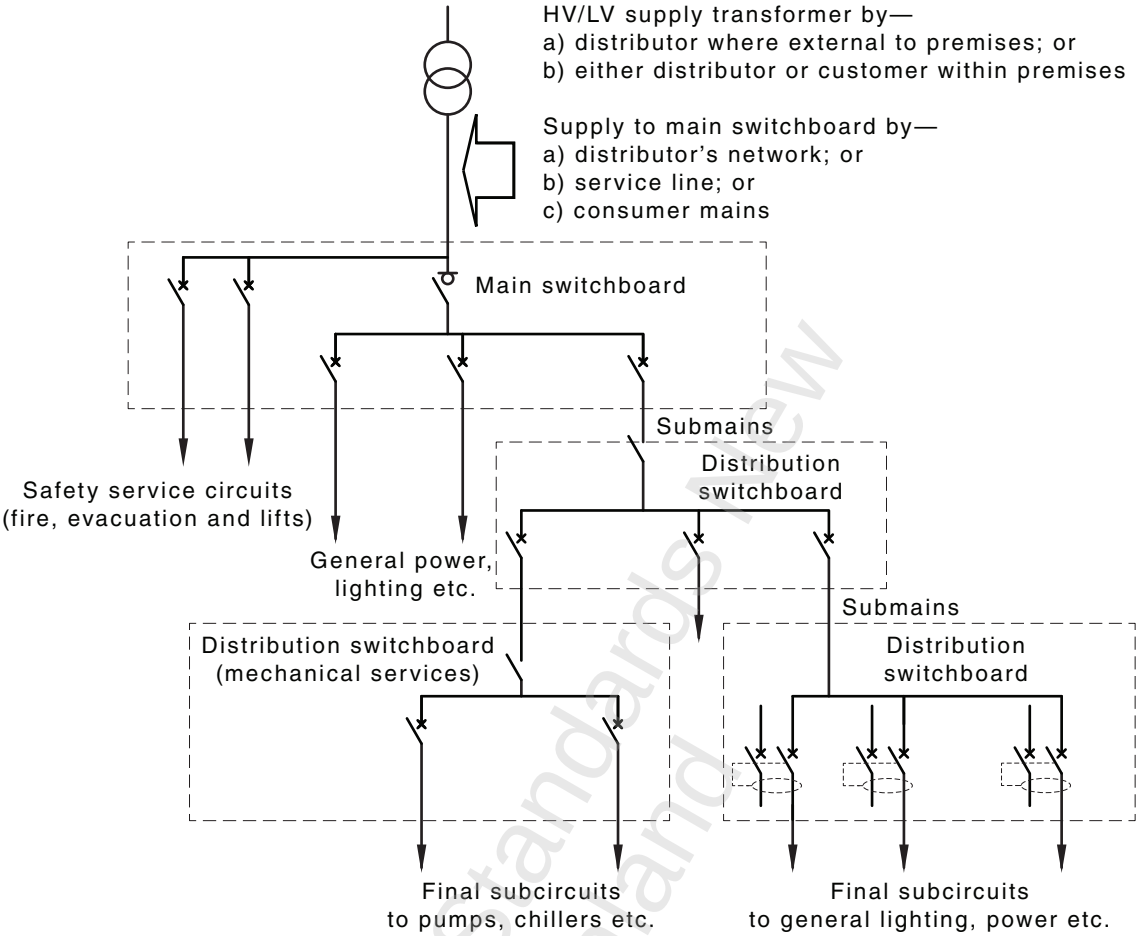

NOTE: Alternative arrangements are permitted; however, this arrangement offers the following advantages:

(a) One circuit only will be shut down (by fuses or circuit-breakers) in case of a fault.

(b) Location of the fault is simplified.

(c) Maintenance or extensions to a circuit can be performed, leaving the remainder of the electrical installation in service.

(d) Conductor sizes can be reduced at protective devices installed on switchboards to suit the decreasing demand towards the final subcircuits.

(e) Conversely, a fault occurring on one of the circuits from the main switchboard will shut down supply to all circuits of related downstream distribution boards.

FIGURE B1 EXAMPLE OF CIRCUIT ARRANGEMENTS FOR AN ELECTRICAL INSTALLATION (TO THREE LEVELS)
(Symbols are explained in Table J1)

Electrical Workers Licensing Group is licenced to temporarily download this document.
auto login of Electrical Workers Licensing Group may print this document but not more than 10% of the documents subscribed to may be held in printed form at any one time.

Copyright Standards New Zealand

auto login of Electrical Workers Licensing Group is licenced to temporarily download this document.
Electrical Workers Licensing Group may print this document but not more than 10% of the documents subscribed to may be held in printed form at any one time.

B3 PROTECTION AGAINST OVERCURRENT

B3.1 General

The term ‘overcurrent’ includes both overload current and short-circuit current.

The danger to the system from overload currents is that the temperature of conductors and their insulation will rise to levels at which the effectiveness of the insulation and its expected service life will be reduced.

Short-circuit currents may be up to several thousand times normal current and will cause overheating and mechanical stresses of conductors and associated connections.

NOTE: See Clause 2.5.4 and the AS/NZS 3008.1 series.

Clause 2.5.1 requires active conductors to be protected by one or more protective devices in the event of overload or short-circuit.

The protection of conductors by protective devices is shown graphically in Figure B2. The conductor is deemed to be protected if its damage curve, determined in accordance with Clause 2.5.4.5, is to the right of the time/current characteristic curve of the protective device.

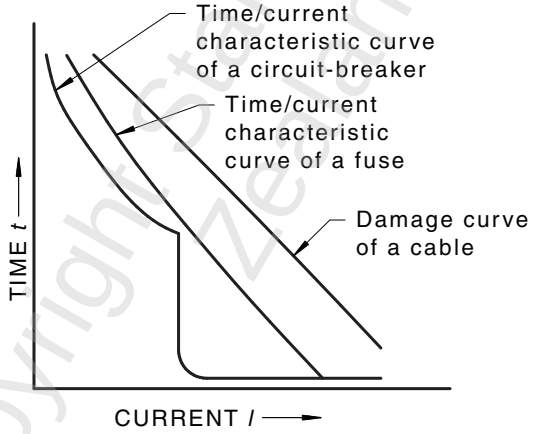

FIGURE B2 TYPICAL OVERCURRENT PROTECTION OF CONDUCTORS

B3.2 Coordination between conductors and overload protective devices

B3.2.1 *General*

Clause 2.5.3 requires a protective device to interrupt overload currents and that the operating characteristics of such a device satisfies the following two conditions that are shown as Equations 2.1 and 2.2 of Clause 2.5.3.1:

$$I_B \leq I_N \leq I_Z$$

$$I_2 \leq 1.45 \times I_Z$$

COPYRIGHT

where

I_B = the current for which the circuit is designed, e.g. maximum demand

I_N = the nominal current of the protective device

NOTE: For adjustable devices, the nominal current (I_N) is the current setting selected.

I_Z = the continuous current-carrying capacity of the conductor (see the AS/NZS 3008.1 series)

I_2 = the current ensuring effective operation of the protective device and may be taken as equal to either the—

(a) operating current in conventional time for circuit-breakers ($1.45I_N$); or

(b) fusing current in conventional time for fuses ($1.6I_N$ for fuses in accordance with the IEC 60269 series).

NOTE: The conditions of the equations are shown graphically in Figure B3.

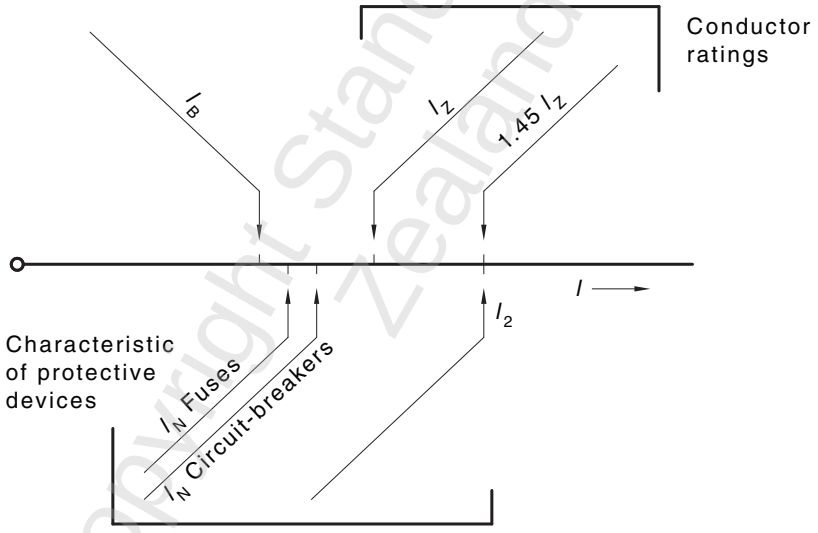

FIGURE B3 COORDINATION OF THE CHARACTERISTICS OF CONDUCTORS AND PROTECTIVE DEVICES

Copyright Standards New Zealand

auto login of Electrical Workers Licensing Group is licenced to temporarily download this document.
Electrical Workers Licensing Group may print this document but not more than 10% of the documents subscribed to may be held in printed form at any one time.

B3.2.2 *Application*

B3.2.2.1 *General*

As shown in Equations 2.1 and 2.2, a protective device functions correctly if—

(a) its nominal current I_N is greater than the maximum load current I_B but less than the maximum allowable current I_Z for the circuit; and

(b) its tripping current I_2 setting is less than $1.45I_Z$.

B3.2.2.2 *Protection by circuit-breakers*

Standards, such as the AS/NZS 60898 series, require the tripping current for circuit-breakers (I_2 in Equation 2.2) to be less than $1.45I_N$, therefore, the condition of Equation 2.2 will always be satisfied. For circuit-breakers, $1.45I_N$ is known as the conventional tripping current.

B3.2.2.3 *Protection by fuses*

Fuses complying with the IEC 60269 series have a conventional tripping current of $1.6I_N$, therefore, to satisfy the conditions of Equation 2.2, the rating of such fuses should not exceed $0.9I_Z$.

NOTE: The factor 0.9 is derived from 1.45/1.6.

B4 PROTECTION BY AUTOMATIC DISCONNECTION OF SUPPLY

B4.1 Application

This Paragraph (Paragraph B4) provides guidance on the application of—

(a) the disconnection times required for protection by automatic disconnection of supply;

(b) the earthing system impedance (earth fault-loop impedance) requirements of Clause 5.7; and

(c) the earth fault-loop impedance test outlined in Clause 8.3.9.3.

B4.2 Principle

The principle of protection by automatic disconnection of supply is intended to prevent a person being subjected to a dangerous touch voltage for a time sufficient to cause organ damage, in the event of an insulation fault.

In order to meet this requirement, in the event of such a fault, the circuit protective device has to interrupt the resulting fault current sufficiently quickly to prevent the touch voltage persisting long enough to be dangerous.

It follows that this method of protection relies on the combination of two conditions:

(a) The provision of a conducting path, designated the ‘earth fault-loop’, to provide for circulation of the fault current.

auto login of Electrical Workers Licensing Group is licenced to temporarily download this document.
Electrical Workers Licensing Group may print this document but not more than 10% of the documents subscribed to may be held in printed form at any one time.

Copyright Standards New Zealand

(b) The interruption of the fault current within a maximum time by an appropriate protective device. This maximum time depends on parameters such as the highest touch voltage, the probability of a fault, and the probability of a person touching equipment during a fault.

NOTE: Acceptable limits of touch voltage and duration are based on a knowledge of the effects of electric current on the human body described in the AS/NZS 60479 series.

Condition (a) requires the installation of protective earthing conductors connecting all exposed conductive parts of the electrical equipment supplied by the installation to an earthing system, thus forming the earth fault-loop as shown in Figure B5. The protective earthing conductors need to be of appropriate size and installed in a sound and reliable manner, in accordance with Section 5 of this Standard.

Condition (b) requires the installation of protective devices with appropriate characteristics as specified in Section 2 of this Standard.

B4.3 Disconnection times

The AS/NZS 60479 series defines two components that permit the establishment of a relationship between the prospective touch voltage and its duration that does not usually result in harmful physiological effects on any person subjected to that touch voltage.

These two components are—

(a) the effect on the human body of electrical currents of various magnitudes and durations flowing through the body; and

(b) the electrical impedance of the human body as a function of touch voltage.

The required relationship between prospective touch voltage and disconnection time is derived for the normal situation as shown in Curve *L* of Figure B4.

Figure B4 shows the maximum duration that a person may be in contact with an exposed live part of a circuit for a range of touch voltages under normal conditions (Curve *L*).

Normal situations were identified as having the following general characteristics:

(i) Dry locations; and

(ii) Floor presenting significant resistance.

Particular situations, including damp or wet locations and those involving exposure to wet or bare skin, require touch voltages to be further limited as shown by curve L_p. Damp situations are covered in Section 6 of this Standard.

COPYRIGHT

Copyright Standards New Zealand

auto login of Electrical Workers Licensing Group is licenced to temporarily download this document.
Electrical Workers Licensing Group may print this document but not more than 10% of the documents subscribed to may be held in printed form at any one time.

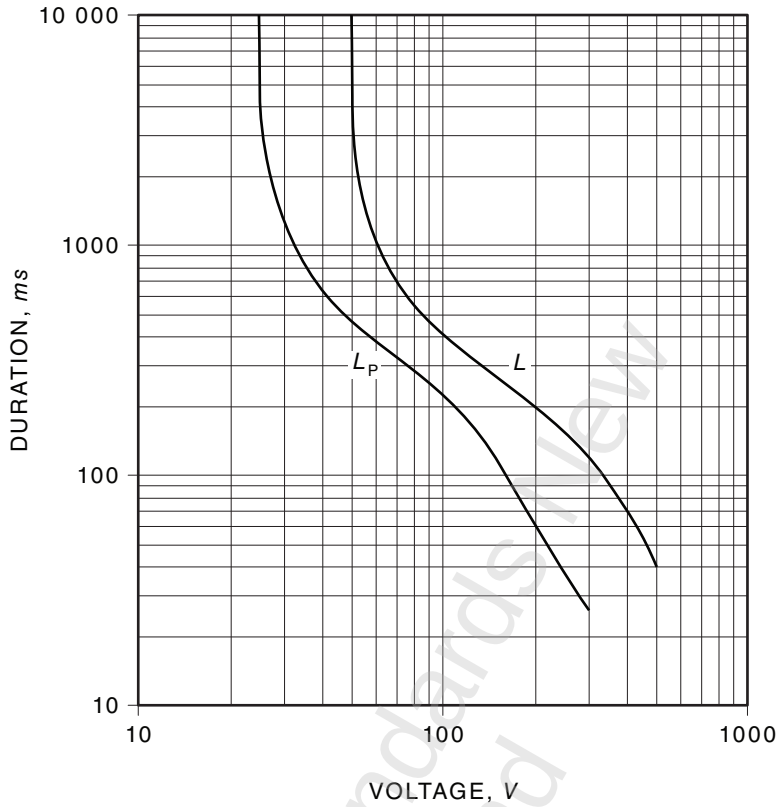

L	for normal conditions	touch voltage limit 50 V
L_p	for wet conditions	touch voltage limit 25 V

[Source: IEC TR 61200-413:1996 © 1996 (IEC), Geneva, Switzerland, www.iec.ch.]

FIGURE B4 MAXIMUM DURATION OF PROSPECTIVE 50 Hz TOUCH VOLTAGE

These curves demonstrate that for normal conditions—

(A) a touch voltage of 50 V can be sustained by a person indefinitely; and

(B) a touch voltage of 100 V cannot be sustained and has to be disconnected.

The required disconnection time depends on environmental conditions and whether a person is likely to be in contact with exposed conductive parts at the time of the fault.

The protective device is selected so that the fault current, $I_A = U_o/Z_s$, ensures its operation in a time t not greater than the required time.

This requires the calculation of the earth fault-loop impedance, Z_s, which is possible only if all the elements of the loop, including the source, are known.

Z_s may be calculated if the live and protective earthing conductors are in close proximity to one another and are not separated by ferromagnetic material. Alternatively, it may be determined by measurement.

COPYRIGHT

auto login of Electrical Workers Licensing Group is licenced to temporarily download this document.
Electrical Workers Licensing Group may print this document but not more than 10% of the documents subscribed to may be held in printed form at any one time.

Copyright Standards New Zealand

Reactance may generally be ignored for conductors of 35 mm^2 or less where the active and earthing conductors are in close proximity to one another. Thus, for such circuits, the current I_A may be calculated using only conductor resistance by—

$$I_A = U_O/(R_{PE} + R_L) \quad \text{. . . B1}$$

where

U_O = the nominal a.c. r.m.s. voltage to earth

R_{PE} = the resistance of the protective earthing conductor from the reference point to the exposed conductive part

R_L = the resistance of the phase (active) conductor from the reference point to the exposed conductive part

A study was made of the influence of the variations in the different parameters on the value of the prospective touch voltage and the corresponding disconnection time.

These parameters are as follows:

(1) The factor *c* that represents the proportion of the supply voltage available at the reference point during operation of the protective device. Depending on the circuit considered, this may vary between 0.6, e.g. a circuit very far from the source, and 1.0, e.g. a circuit supplied directly from the source.

(2) The value *m* is the ratio of the cross-sectional area of the phase conductor compared to the cross-sectional area of the protective earthing conductor in the circuit considered.

The supply voltage U_O may vary within the limits specified in AS 60038 in Australia, or IEC 60038 in New Zealand.

Using a mean value of 0.8 for the factor *c* and a ratio *m* of 1, values that exist in most final subcircuits, the prospective touch voltage U_T for a circuit is given by—

$$U_T = c\ U_O\ m/(1 + m) = 0.8 \times 230 \times 1/2 = 92\ V \quad \text{. . . B2}$$

thus

$$U_T = 92\ V$$

This touch voltage approximates to a time of 0.4 s, according to curve *L* of Figure B4.

Therefore, for hand-held equipment, the maximum disconnection time for a 230 V nominal a.c. r.m.s. voltage to earth should not exceed 0.4 s.

Disconnection times up to but not exceeding 5 s are permitted for circuits not directly supplying portable or hand-held equipment for the following reasons:

(aa) Faults in such circuits are less likely.

COPYRIGHT

Copyright Standards New Zealand

auto login of Electrical Workers Licensing Group is licenced to temporarily download this document.
Electrical Workers Licensing Group may print this document but not more than 10% of the documents subscribed to may be held in printed form at any one time.

(bb) There is less likelihood of persons being in contact with equipment supplied by such circuits during a fault.

(cc) Equipment supplied by these circuits is not usually gripped and can therefore be released easily if a fault occurs.

(dd) Touch voltages are not expected to exceed the values set out in Figure B4 for the time/touch-voltage relationship.

The time limit of 5 s does not imply intentional delayed operation of protective devices or touch voltages that are unsafe.

Where the conditions for protection by automatic disconnection of supply cannot be fulfilled by overcurrent protective devices, such protection may be provided by RCDs having a suitable tripping time. This may occur with circuits supplying socket-outlets, the length of which is unknown, or circuits of great length and small cross-sectional area thus having high impedance.

NOTE: Maximum disconnection times will vary for other operating voltages or installation conditions. In particular, lower values of disconnecting time and touch voltage may be required for damp situations or special installations, in accordance with the requirements of Sections 6 and 7 of this Standard.

B4.4 The earth fault-loop

The earth fault-loop in an MEN system comprises the following parts, starting and ending at the point of fault (see Figure B5):

(a) The protective earthing conductor (PE) including the main earthing terminal/connection or bar and MEN connection.

(b) The neutral-return path, consisting of the neutral conductor (N) between the main neutral terminal or bar and the neutral point at the transformer (the earth return path R_G to R_B has a relatively high resistance and may be ignored for an individual installation in an MEN system).

(c) The path through the neutral point of the transformer and the transformer winding.

(d) The active conductor as far as the point of the fault.

The earth fault-loop is normally regarded as consisting of the following two parts:

(i) Conductors upstream or ‘external’ to the reference point.

(ii) Conductors downstream or ‘internal’ to the circuit from the reference point.

Figure B5 shows an active-to-earth fault which, for the purposes of calculations, is deemed to be of negligible impedance.

Copyright Standards New Zealand

auto login of Electrical Workers Licensing Group is licenced to temporarily download this document.
Electrical Workers Licensing Group may print this document but not more than 10% of the documents subscribed to may be held in printed form at any one time.

At the instant of the fault, current will flow through the earth fault-loop and its magnitude is only limited by the total system impedance Z_s that is obtained from all the individual impedances in the earth fault-loop as follows:

$$Z_s = Z_{AB} + Z_{BC} + Z_{CD} + Z_{DE} + Z_{EF} + Z_{FG} + Z_{GH} + Z_{HA} \quad \ldots \text{B3}$$

In Figure B5, impedances Z_{AB}, Z_{BC}, Z_{FG}, Z_{GH} and Z_{HA} are all upstream of the protective device within the electrical installation under consideration and are regarded as being external to the reference point, hence, they may be collectively referred to as Z_{ext}. The remainder that are downstream (or 'internal') may be referred to as Z_{int}, therefore, $Z_s = Z_{ext} + Z_{int}$.

This ratio is used to determine a suitable circuit length (see Paragraph B5).

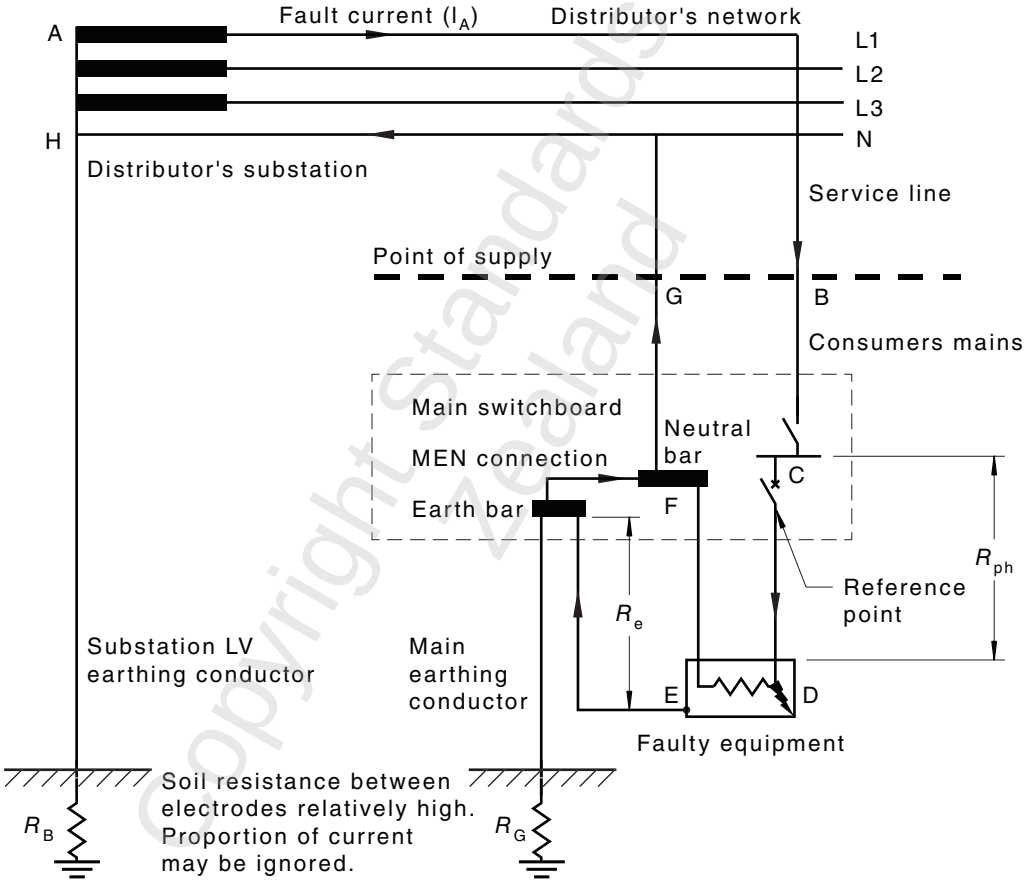

NOTE: Although supply from a distribution system is shown, the same principle applies where the substation forms part of the electrical installation.

FIGURE B5 MEN SYSTEM (SIMPLIFIED)—SHOWING FAULT CURRENT (I_A) PATH (EARTH FAULT-LOOP)

COPYRIGHT

Electrical Workers Licensing Group may print this document but not more than 10% of the documents subscribed to may be held in printed form at any one time.
auto login of Electrical Workers Licensing Group is licenced to temporarily download this document.

B4.5 Calculation of earth fault-loop impedance

Table 8.1 contains calculated examples of the maximum values of earth fault-loop impedance, Z_s, using approximate mean tripping currents, which may be taken as I_A for a limited range of MCBs (taken from the AS/NZS 60898 series and manufacturers' time/current characteristic curves) and fuses (taken from IEC 60269.1) and the appropriate disconnection time.

NOTES:

1 The appropriate tolerances permitted by the product Standard should be taken into consideration. Therefore, as part of the simplification process, approximate mean tripping currents have been used.

2 See Figure B6 for typical time/current curves for a circuit-breaker and a fuse.

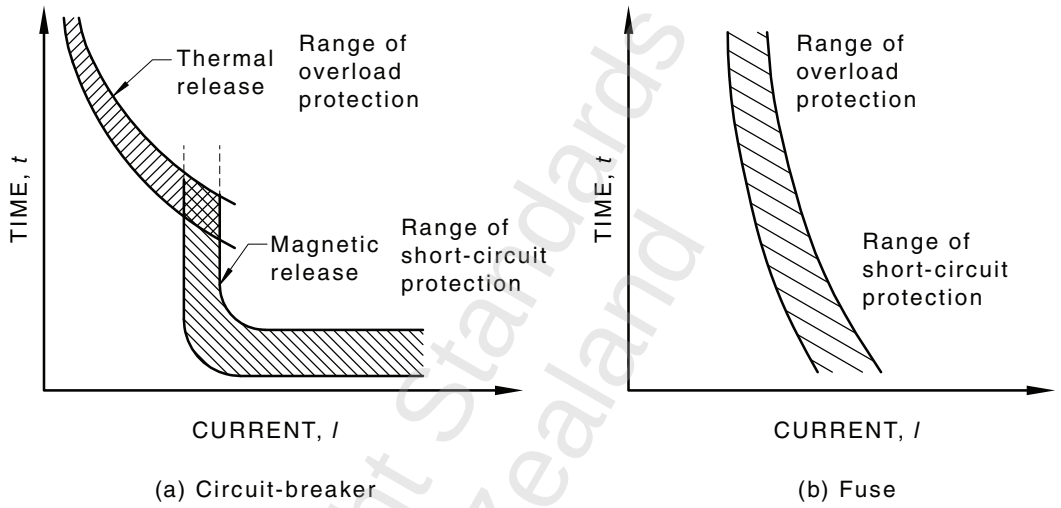

FIGURE B6 TYPICAL TIME/CURRENT CURVES FOR CIRCUIT-BREAKERS AND FUSES

The values of Z_s in Table 8.1 were calculated using the following equation:

$$Z_s = U_o/I_a \quad \text{. . . B4}$$

where

Z_s = earth fault-loop impedance

U_o = nominal phase voltage (230 V)

I_a = current causing automatic operation of the protective device, as follows:

I_a for circuit-breakers is the mean tripping current as follows:

Type B = 4 × rated current

Type C = 7.5 × rated current

Type D = 12.5 × rated current

COPYRIGHT

Copyright Standards New Zealand

Electrical Workers Licensing Group auto login of Electrical Workers Licensing Group is licenced to temporarily download this document. Group may print this document but not more than 10% of the documents subscribed to may be held in printed form at any one time.

I_a for fuses consists of approximate mean values from IEC 60269.1

B4.6 Earth fault-loop impedance measurement

Clause 8.3.9 requires an earth fault-loop impedance measurement test. The measured impedance should not exceed the value given for Z_s in Table 8.1 for the appropriate protective device and disconnection time.

The earth fault-loop impedance should be measured using an instrument that has a facility for measuring and indicating low values of impedance.

The MEN connection needs to be left intact.

Measurements can be made as follows:

(a) For a submain, where the instrument is connected between the relevant active conductor and the main earthing terminal/connection or bar at a switchboard.

(b) For a final subcircuit, where the instrument is connected between the furthest point on the active conductor and the corresponding point on the associated protective earthing conductor, e.g. at a socket-outlet.

The suitability of the particular overcurrent protective device depends on the value of the earth fault-loop impedance (Z_s).

NOTE: Where the circuit protective device is an RCD, the measurement of earth fault-loop impedance is not necessary; however, it is recommended that such measurement be carried out so as to identify any abnormal circuit conditions that may be present.

B5 MAXIMUM CIRCUIT LENGTHS

B5.1 General

The information in Paragraph B5.2 may be used as a guide to provide a reasonably accurate assessment of maximum circuit lengths, in metres, that will ensure the correct operation of the protective device within the appropriate disconnection time to provide fault protection, in accordance with Clause 5.7.

B5.2 Calculation of maximum length of circuit

B5.2.1 *Determination of Z_{int}*

As stated in Paragraph B4.4, $Z_s = Z_{ext} + Z_{int}$.

When an electrical installation is being designed, Z_{ext} may or may not be available (it will depend on the electricity distributor's transformer and supply cables). If it is not available, Z_{int} may be determined by either of the following methods:

(a) When the length and cross-sectional area of conductors are known—

$$Z_{int} = Z_{CD} + Z_{EF} \quad \ldots \text{B5}$$

COPYRIGHT

Copyright Standards New Zealand

auto login of Electrical Workers Licensing Group is licenced to temporarily download this document.
Electrical Workers Licensing Group may print this document but not more than 10% of the documents subscribed to may be held in printed form at any one time.

where

Z_{CD} = impedance of the active conductors (C to D in Figure B5)

Z_{EF} = impedance of the protective earthing conductors (E to F in Figure B5)

NOTES:

1 Consumer mains (Z_{BC} and Z_{FG}) form part of Z_{ext}.

2 Impedances for conductors are given in the AS/NZS 3008.1 series.

(b) When the length and cross-sectional area of the supply conductors are not known, it may be assumed that there will always be 80% or more of the nominal phase voltage available at the position of the circuit protective device. Therefore, Z_{int} should be not greater than 0.8 Z_s. This may be expressed as follows:

$$Z_{int} = 0.8\ U_o/I_a \qquad \text{. . . B6}$$

B5.2.2 *Calculation method*

This method is only reliable where the conductors that make up the earth-fault-current loop are in close proximity to each other and are not separated by ferromagnetic materials.

Equation B6 may be expressed in terms of circuit length by considering conductor sizes (active and earth) and protective device tripping current (see Note 1). This gives rise to the following equation:

$$L_{max} = \frac{0.8U_oS_{ph}S_{pe}}{I_a\rho\left(S_{ph}+S_{pe}\right)} \qquad \text{. . . B7}$$

where

L_{max} = maximum route length, in metres (see Table B1)

U_o = nominal phase volts (230 V)

ρ = resistivity at normal working temperature, in Ω-mm^2/m

= 22.5×10^{-3} for copper

= 36×10^{-3} for aluminium

I_a = trip current setting for the instantaneous operation of a circuit-breaker
or

= the current that assures operation of the protective fuse concerned, in the specified time

S_{ph} = cross-sectional area of the active conductor of the circuit concerned, in mm^2

S_{pe} = cross-sectional area of the protective earthing conductor concerned, in mm^2

COPYRIGHT

Copyright Standards New Zealand

auto login of Electrical Workers Licensing Group is licenced to temporarily download this document.
Electrical Workers Licensing Group may print this document but not more than 10% of the documents subscribed to may be held in printed form at any one time.

NOTES:

1 Mean tripping currents, as outlined in Note 1 to Paragraph B4.5, are used for I_A.

2 This calculation method is considered valid for cable sizes up to 120 mm^2. For larger sizes, Z_s should be calculated by other methods taking account of cable inductance.

A1

B5.2.3 *Guidance tables*

Table B1 provides typical maximum circuit route lengths above which the impedance of the conductors could limit the magnitude of the short-circuit current to a level below that required to operate the protective device protecting the circuit in sufficient time to ensure safety against indirect contact.

The lengths were calculated using Equation B7 and the active and protective earthing conductor sizes outlined in the table.

Table B2 provides a comparison of maximum circuit route length limits due to voltage drop and earth fault loop impedance. Where voltage drop values are in italics, the circuit route length is limited by earth fault loop impedance.

Table C8 provides an alternative voltage drop assessment method that can be applied where route length and circuit current are known.

B5.2.4 'Text deleted'

TABLE B1

MAXIMUM ROUTE LENGTHS FOR DIFFERENT SIZES OF CONDUCTORS AND PROTECTIVE DEVICES USING APPROPRIATE MEAN TRIPPING CURRENTS (I_a)*

Conductor size		Protective device rating	Circuit-breaker (see Note 1)			Fuses (see Note 2)
Active	Earth		Type B	Type C	Type D	
mm^2	mm^2	A	Maximum route length (L_{max}), m			
1	1	6	170	91	55	204
1	1	10	102	55	33	114
1.5	1.5	10	153	82	49	170
1.5	1.5	16	96	51	31	82
2.5	2.5	16	160	85	51	136
2.5	2.5	20	128	68	41	93
4	2.5	25	126	67	40	90
4	2.5	32	98	52	31	70
6	2.5	40	90	48	29	60

(*continued*)

COPYRIGHT

Copyright Standards New Zealand

Electrical Workers Licensing Group may print this document but not more than 10% of the documents subscribed to may be held in printed form at any one time.
auto login of Electrical Workers Licensing Group is licenced to temporarily download this document.

A1

TABLE B1 (*continued*)

Conductor size		Protective device rating	Circuit-breaker (see Note 1)			Fuses (see Note 2)
Active	Earth		Type B	Type C	Type D	
mm^2	mm^2	A	Maximum route length (L_{max}), m			
10	4	50	117	62	37	73
16	6	63	142	76	45	85
16	6	80	112	59	36	59
25	6	80	124	66	40	66
25	6	100	99	53	32	47
35	10	100	159	85	51	75
35	10	125	127	68	41	58
50	16	125	198	106	63	90
50	16	160	155	83	50	71
70	25	160	235	126	75	108
70	25	200	188	100	60	84

* See Clause B4.5 for values of I_a.

NOTES TO TABLE B1:

1 The types of circuit-breakers (Type B, C or D) are based on the types described in AS/NZS 60898 series.

2 Fuses based on IEC 60269-1 are also known as BS 88 type fuses.

3 The maximum route lengths are the length of the phase conductor from the point of connection to the point of use and are related to a disconnection time of 0.4 s.

4 When the nominal phase voltage of the electrical installation is not 230 V, the maximum length may be determined by multiplying by a factor of U_o/230. For a nominal phase voltage of 240 V, the factor would be ~1.04.

5 Lengths of circuits may also be limited by voltage drop, particularly for single-phase arrangements.

6 The maximum length obtained only satisfies the fault protection requirements of Clause 1.5.5.3. The overload, short-circuit and voltage drop requirements will need to be considered independently.

B5.2.5 *Guidance table*

Table B2 contains comparison of circuit route lengths based on the loop impedance of circuit conductors at various voltage drop levels.

Circuit length limiting factors include voltage drop and fault-loop impedance. Table B1 provides maximum route lengths based on fault-loop impedance and Clause C4 provides information on voltage drop. Table C7 provides a simple method for estimating the voltage drop for various conductor sizes.

Table B2 gives calculations of circuit lengths based on voltage drop and fault loop impedance. The figures in **bold** indicate where the voltage drop is the limiting factor. If the figures are in *italics*, then the length should be based on the values of the earth loop impedance.

auto login of Electrical Workers Licensing Group is licenced to temporarily download this document.
Electrical Workers Licensing Group may print this document but not more than 10% of the documents subscribed to may be held in printed form at any one time.

Copyright Standards New Zealand

COPYRIGHT

TABLE B2

COMPARISON OF CIRCUIT ROUTE LENGTH BASED ON LOOP IMPEDANCE AND VARIOUS VOLTAGE DROPS

Circuit breaker rating I_n	Phase and neutral	Earth	Circuit length based on EFLI (MCB Curve C)[a]	Circuit length based on voltage drop (single phase 230 V)[b]							
				5% VD at I_n[c]	5% VD on distributed circuit[d]	4% VD at I_n[c]	4% VD on distributed circuit[d]	3% VD at I_n[c]	2.5% VD at I_n[c]	1.0% VD at I_n[c]	1.0% VD on distributed circuit[d]
A	mm^2	mm^2	m	m	m	m	m	m	m	m	m
6	1	1	**91**	**37**	**82**	**30**	**66**	**22**	**19**	**7**	**16**
10	1	1	**55**	**22**	**49**	**18**	**40**	**13**	**11**	**4**	**10**
10	1.5	1.5	**82**	**35**	**77**	**28**	**62**	**21**	**17**	**7**	**15**
16	1.5	1.5	**51**	**22**	**48**	**17**	**38**	**13**	**11**	**4**	**10**
16	2.5	2.5	**85**	**40**	*88*	**32**	**71**	**24**	**20**	**8**	**18**
20	2.5	2.5	**68**	**32**	*71*	**26**	**56**	**19**	**16**	**6**	**14**
25	4	2.5	**67**	**41**	*91*	**33**	*73*	**25**	**21**	**8**	**18**
32	4	2.5	**52**	**32**	*71*	**26**	*57*	**19**	**16**	**6**	**14**
40	6	2.5	**48**	**38**	*85*	**31**	*68*	**23**	**19**	**8**	**17**
50	10	4	**62**	**52**	*114*	**41**	*91*	**31**	**26**	**10**	**23**
63	16	6	**76**	**65**	*144*	**52**	*115*	**39**	**33**	**13**	**29**
80	16	6	**59**	**51**	*113*	**41**	*91*	**31**	**26**	**10**	**23**
80	25	6	**66**	*80*	*178*	**64**	*142*	**48**	**40**	**16**	**36**
100	25	6	**53**	*64*	*142*	**51**	*114*	**39**	**32**	**13**	**28**
100	35	10	**85**	*89*	*195*	**71**	*156*	**53**	**44**	**18**	**39**

(*continued*)

Standards Australia Purchased Copyright

auto login of Electrical Workers Licensing Group is licenced to temporarily download this document.
Electrical Workers Licensing Group may print this document but not more than 10% of the documents subscribed to may be held in printed form at any one time.

TABLE B2 (*continued*)

Circuit breaker rating I_n	Phase and neutral	Earth	Circuit length based on EFLI (MCB Curve C)[a]	Circuit length based on voltage drop (single phase 230 V)[b]							
				5% VD at I_n[c]	5% VD on distributed circuit[d]	4% VD at I_n[c]	4% VD on distributed circuit[d]	3% VD at I_n[c]	2.5% VD at I_n[c]	1.0% VD at I_n[c]	1.0% VD on distributed circuit[d]
A	mm^2	mm^2	m	m	m	m	m	m	m	m	m
125	35	10	**68**	*71*	*156*	**57**	*125*	**43**	**36**	**14**	**31**
125	50	16	**106**	*95*	*209*	**76**	*167*	**57**	**47**	**19**	**42**
160	50	16	**83**	*74*	*163*	**59**	*130*	**44**	**37**	**15**	**33**
160	70	25	**126**	*104*	*228*	**83**	*183*	**63**	**52**	**21**	**46**
200	70	25	**100**	*83*	*183*	**67**	*146*	**50**	**42**	**17**	**37**

[a] Earth fault loop impedance lengths are for MCB Curve C and disconnection time within 0.4 s.

[b] Circuit length based on voltage drop. If in **bold**, voltage drop is the limiting figure; if in *italics*, use *length* based on earth fault-loop impedance.

[c] Calculations are based on resistance of cable at 75°C.

[d] Voltage drop on final subcircuits with distributed loads (see Clause 3.6.2 Exception 1) uses half the current rating of the MCB.

COPYRIGHT

Copyright Standards New Zealand

auto login of Electrical Workers Licensing Group is licenced to temporarily download this document.
Electrical Workers Licensing Group may print this document but not more than 10% of the documents subscribed to may be held in printed form at any one time.

APPENDIX C
CIRCUIT ARRANGEMENTS
(Informative)

C1 SCOPE

This Appendix provides guidance on the following:

(a) Determination of the circuit current for consumer mains, submains and final subcircuits.

(b) Cable selection based on current-carrying capacity and voltage drop.

(c) Coordination of current ratings of circuit cables and protective devices.

(d) Division of installation into circuits supplying single and multiple items of equipment, as necessary, to provide satisfactory performance of circuits for the purpose intended.

(e) Cable installation.

These are the factors that determine the arrangement of circuits in an installation that is deemed to meet the design, equipment selection and installation criteria of this Standard.

C2 MAXIMUM DEMAND

C2.1 After diversity maximum demand

As indicated in Clause 2.5.3, the current in a circuit is not permitted to exceed the current rating of the circuit protective device, which, in turn, is not permitted to exceed the current-carrying capacity of the circuit conductors.

NOTE: Paragraph B3.2 of Appendix B explains further.

For circuits supplying a single item of equipment, the circuit current is simply the nominal load current of the equipment, e.g. a 10 000 W 230/400 V three-phase heater has a full per-phase load current of 14.5 A. The circuit conductors and the protective device are required to have a current-carrying capacity of not less than 16 A (nearest standard rating).

Where more than one item of equipment is connected, the circuit current could be assessed as the sum of the individual equipment load currents. While this would provide a safe and conservative solution, it does not take account of the normal operating conditions during which all equipment is not operating simultaneously at full load or for long periods, e.g. submains to a distribution board associated with numerous socket-outlet circuits.

Under such conditions, the circuit current is estimated using diversity factors and is often described as the ‘after diversity maximum demand’.

COPYRIGHT

Copyright Standards New Zealand

auto login of Electrical Workers Licensing Group is licenced to temporarily download this document.
Electrical Workers Licensing Group may print this document but not more than 10% of the documents subscribed to may be held in printed form at any one time.

The diversity factors applicable to any given circuit in an installation will depend on a number of features of the installation including—

(a) conditions under which the installation is expected to be used, e.g. residential compared with commercial;

(b) operating characteristics of the connected load, e.g. airconditioning load in tropical locations compared with heating loads in cold-climate regions;

(c) number and physical distribution of points provided on the circuit, e.g. socket-outlets provided for convenient connection of portable equipment compared to dedicated or fixed equipment loads; and

(d) size and type of significant loads, e.g. large motors or industrial plant.

It should be recognized that the determination of diversity factors given in this Appendix will not be accurate for every installation and different installations of the same type may have significantly different load profiles which the designer needs to consider. The methods provided herein have been used over several editions of this Standard and, provided that care is taken to assess the presence of unusual equipment loads, are considered appropriate for many typical applications.

When the load is assessed and the current-carrying capacity of the circuit is determined by allowing for diversity of operation of equipment, then the circuit should be protected by a circuit-breaker of rating to conform with Paragraph B3.2 of Appendix B.

C2.2 Calculation of maximum demand in consumer mains and submains

As specified in Clause 2.2.2, maximum demand current may be determined by one of four methods—calculation, assessment, measurement or limitation. The following paragraphs provide information on and examples of the application of the calculation method for determining maximum demand current in consumer mains and submains only.

C2.3 Domestic installations

C2.3.1 *Method*

Table C1 provides an allocation of load for different types of equipment connected to consumer mains or submains in a single or multiple domestic installation. The load current is calculated for each equipment load group in the installation or affected part thereof, and these contributions are added together to achieve the maximum demand current. The accompanying notes provide clarification of certain provisions and the ensuing examples demonstrate how the calculation is made.

auto login of Electrical Workers Licensing Group is licenced to temporarily download this document.
Electrical Workers Licensing Group may print this document but not more than 10% of the documents subscribed to may be held in printed form at any one time.

Copyright Standards New Zealand

TABLE C1

MAXIMUM DEMAND—SINGLE AND MULTIPLE DOMESTIC ELECTRICAL INSTALLATIONS

1	2	3	4	5
Load group	**Single domestic electrical installation or individual living unit per phase[1]**	**Blocks of living units[1, 2, 3]**		
		2 to 5 living units per phase	**6 to 20 living units per phase**	**21 or more living units per phase**
		Loading associated with individual units		
(a) Lighting				
(i) Lighting except (ii) and load group (h) below[4, 6]	3 A for 1 to 20 points + 2 A for each additional 20 points or part thereof	6 A	5 A + 0.25 A per living unit	0.5 A per living unit
(ii) Outdoor lighting exceeding a total of 1000 W[6, 7]	75% connected load	No assessment for the purpose of maximum demand		
(b) (i) Socket-outlets not exceeding 10 A[5, 8]. Permanently connected electrical equipment not exceeding 10 A and not included in other load groups[9]	10 A for 1 to 20 points + 5 A for each additional 20 points or part thereof	10 A + 5 A per living unit	15 A + 3.75 A per living unit	50 A + 1.9 A per living unit
(ii) Where the electrical installation includes one or more 15 A socket-outlets, other than socket-outlets provided to supply electrical equipment set out in load groups (c), (d), (e), (f), (g) and (l)[8, 10]	10 A			
(iii) Where the electrical installation includes one or more 20 A socket-outlets other than socket-outlets provided to supply electrical equipment set out in load groups (c), (d), (e), (f), (g) and (l)[8, 10]	15 A			

(*continued*)

COPYRIGHT

Copyright Standards New Zealand

auto login of Electrical Workers Licensing Group is licenced to temporarily download this document.
Electrical Workers Licensing Group may print this document but not more than 10% of the documents subscribed to may be held in printed form at any one time.

TABLE C1 (*continued*)

1	2	3	4	5
Load group	**Single domestic electrical installation or individual living unit per phase(1)**	**Blocks of living units(1, 2, 3)**		
		2 to 5 living units per phase	**6 to 20 living units per phase**	**21 or more living units per phase**
		Loading associated with individual units		
(c) Ranges, cooking appliances, laundry equipment or socket-outlets rated at more than 10 A for the connection thereof(8)	50% connected load	15 A	2.8 A per living unit	
(d) Fixed space heating or airconditioning equipment, saunas or socket-outlets rated at more than 10 A for the connection thereof(8, 11)	75% connected load	75% connected load	75% connected load	
(e) Instantaneous water heaters:(12)	33.3% connected load	6 A per living unit		100 A + 0.8 A per living unit
(f) Storage water heaters(13)	Full-load current	6 A per living unit		100 A + 0.8 A per living unit
(g) Spa and swimming pool heaters	75% of the largest spa, plus 75% of the largest swimming pool, plus 25% of the remainder			
Load group	**Single domestic electrical installation or individual living unit per phase(1)**	**Loading not associated with individual units—Connected to each phase (communal lighting, laundry loadings, lifts, motors, etc.)**		
(h) Communal lighting(6, 7)	Not applicable	Full connected load		
(i) Communal socket-outlets not included in load groups (j) and (m) below(8, 10, 14) Permanently connected electrical equipment not exceeding 10 A	Not applicable	2 A per point, up to a maximum of 15 A		

(*continued*)

COPYRIGHT

Copyright Standards New Zealand

auto login of Electrical Workers Licensing Group is licenced to temporarily download this document.
Electrical Workers Licensing Group may print this document but not more than 10% of the documents subscribed to may be held in printed form at any one time.

TABLE C1 (*continued*)

Load group	Single domestic electrical installation or individual living unit per phase[1]	Loading not associated with individual units—Connected to each phase (communal lighting, laundry loadings, lifts, motors, etc.)		
(j) Communal appliances rated at more than 10 A and socket-outlets for the connection thereof—				
(i) Clothes dryers, water heaters, self-heating washing machines, wash boilers[8]	Not applicable	50% connected load		
(ii) Fixed space heating, airconditioning equipment, saunas[11]	Not applicable	75% connected load		
(iii) Spa and swimming pool heaters	Not applicable	75% of the largest spa plus 75% of the largest swimming pool, plus 25% of the remainder		
(iv) Charging equipment associated with electric vehicles	Full connected load	100% connected load	90% connected load	75% connected load
(k) Lifts	In accordance with Paragraph C2.4.1 and Table C2	Communal in accordance with Paragraph C2.4.1 and Table C2		
(l) Motors	In accordance with Paragraph C2.4.1 and Table C2, Column 2	Communal in accordance with Paragraph C2.4.1 and Table C2, Column 2		
(m) Appliances, including socket-outlets other than those set out in load groups (a) to (l) above, e.g. pottery kilns, welding machines, radio transmitters, X-ray equipment and the like	Connected load 5 A or less—no assessment for purpose of maximum demand	Communal connected load 10 A or less—no assessment for purpose of maximum demand		
	Connected load over 5 A—by assessment	Communal connected load over 10 A—by assessment		

COPYRIGHT

Copyright Standards New Zealand

auto login of Electrical Workers Licensing Group is licenced to temporarily download this document.
Electrical Workers Licensing Group may print this document but not more than 10% of the documents subscribed to may be held in printed form at any one time.

NOTES TO TABLE C1:

1 See Clause 2.2.2 for the circumstances where the maximum demand for consumer mains, submains, and final subcircuits, may be determined by assessment, measurement or limitation.

2 For multiphase connections, divide the number of living units by the number of supply phases, e.g. for 16 units on a three-phase supply, 16/3 = 6 units on the heaviest loaded phase (Column 4).

3 Where only a portion of the number of units in a multiple domestic electrical installation is equipped with permanently connected or fixed appliances, such as electric cooking ranges or space heating equipment, the number of appliances in each category is divided over the number of phases, and the maximum demand determined as shown in Paragraph C2.3.2.3.

4 Lighting track systems are regarded as two points per metre of track.

5 A socket-outlet installed more than 2.3 m above a floor for the connection of a luminaire may be included as a lighting point in load group (a)(i).

An appliance rated at not more than 150 W, which is permanently connected, or connected by means of a socket-outlet installed more than 2.3 m above a floor, may be included as a lighting point in load group (a)(i).

6 In the calculation of the connected load, the following ratings are assigned to lighting:

(a) *Incandescent lamps* 60 W or the actual wattage of the lamp to be installed, whichever is the greater, except if the design of the luminaire associated with the lampholder only permits lamps of less than 60 W to be inserted in any lampholder, in which case, the connected load of that lampholder is the wattage of the highest rated lamp that may be accommodated. For multi-lamp luminaires, the load for each lampholder is assessed on the above basis.

(b) *Fluorescent and other discharge lamps* Full connected load, i.e. the actual current consumed by the lighting arrangement, including the losses of auxiliary equipment, such as ballasts and capacitors.

(c) *Lighting tracks (230 V)* 0.5 A/m per phase of track or the actual connected load, whichever is the greater.

7 Floodlighting, swimming pool lighting, tennis court lighting and the like.

8 For the purpose of determining maximum demand, a multiple combination socket-outlet is regarded as the same number of points as the number of integral socket-outlets in the combination.

9 Each item of permanently connected electrical equipment not exceeding 10 A may be included in load group (b)(i) as an additional point.

10 Where an electrical installation contains 15 A or 20 A socket-outlets covered by load group (b)(ii) or (b)(iii), the base loading of load group (b) is increased by 10 A or 15 A respectively. If both 15 A and 20 A socket-outlets are installed, the increase is 15 A.

11 Where an electrical installation includes an airconditioning system for use in hot weather and a heating system for use in cool weather, only the system that has the greater load is taken into account.

12 Instantaneous water heaters including ‘quick recovery’ heaters having element ratings greater than 100 W/L.

13 Storage-type water heaters, including ‘quick recovery’ heaters not covered by Note 12.

14 This load group is not applicable to socket-outlets installed in communal areas but connected to the individual living units. Such socket-outlets should be included in load group (b).

auto login of Electrical Workers Licensing Group is licenced to temporarily download this document.
Electrical Workers Licensing Group may print this document but not more than 10% of the documents subscribed to may be held in printed form at any one time.

Copyright Standards New Zealand

C2.3.2 *Examples of calculation*

NOTE: These examples were calculated assuming a supply voltage and electrical equipment rating of 230 V.

C2.3.2.1 *Example 1*

Problem:

To determine the maximum demand of a single domestic electrical installation supplied at single-phase with the following load:

24 lighting points

10 m of lighting track

9 10 A single socket-outlets

8 10 A double socket-outlets

1 50 W exhaust fan

1 1000 W strip heater

1 15 A socket-outlet

1 10 000 W range

1 4800 W water heater

1 3000 W tennis court lighting

Solution:

The method of determining demand in accordance with Table C1 is as follows:

Load group (a)(i)—

24 lighting points; plus

10 m of lighting track; plus

50 W exhaust fan = 45 points

= 3 + 2 + 2 = 7 A.

Load group (a)(ii)—

3000 W tennis court lighting = 13 × 0.75 = 9.8 A.

Load group (b)(i)—

9 × 10 A single socket-outlets; plus

8 × 10 A double socket-outlets = 25 points

1000 W strip heater = 1 point

= 10 + 5 = 15 A.

Load group (b)(ii)—

15 A socket-outlet = 10 A.

COPYRIGHT

Copyright Standards New Zealand

auto login of Electrical Workers Licensing Group is licenced to temporarily download this document.
Electrical Workers Licensing Group may print this document but not more than 10% of the documents subscribed to may be held in printed form at any one time.

Load group (c)—

10 000 W range = 43.48 × 0.5 = 21.7 A.

Load group (f)—

Water heater 4800 W = 20.9 A.

Total demand = Sum of load group demands = (a)(i) + (a)(ii) + (b)(i) + (b)(ii) + (c) + (f)

= 7 + 9.8 + 15 + 10 + 21.7 + 20.9

= 84.4 A

C2.3.2.2 *Example 2*

Problem:

To determine the maximum demand of the heaviest loaded phase in a domestic electrical installation comprising—

26 lighting points

24 10 A single-phase single socket-outlets

1 15 A single-phase socket-outlet

1 16 600 W three-phase electric range consisting of two 5000 W hotplates and one 6600 W oven

1 4000 W single-phase airconditioning unit

1 12 960 W three-phase instantaneous water heater

1 3600 W single-phase clothes dryer

and arranged for connection across a three-phase supply as follows:

Red	***White***	***Blue***
15 A socket-outlet 5000 W hotplate 4000 W airconditioner	5 × 10 A socket-outlets 5000 W hotplates	9 × 10 A socket-outlets 6600 W oven
4320 W instantaneous water heater	4320 W instantaneous water heater 3600 W clothes dryer	4320 W instantaneous water heater

auto login of Electrical Workers Licensing Group is licenced to temporarily download this document.
Electrical Workers Licensing Group may print this document but not more than 10% of the documents subscribed to may be held in printed form at any one time.

Copyright Standards New Zealand

Solution:

The method of determining the demand in the heaviest loaded phase, in accordance with Table C1 is as follows:

Equipment	*Load group*	*Column*	*Red A*	*White A*	*Blue A*
Lighting	(a)(i)	2			5
10 A socket-outlets	(b)(i)	2		10	10
15 A socket-outlet	(b)(ii)	2	10		
Range	(c)	2	10.9	10.9	14.4
Airconditioner	(d)	2	13.0		
Water heater	(e)	2	6.3	6.3	6.3
Clothes dryer	(c)	2		7.8	
			40.2	35.0	35.7

Total loading, heaviest loaded phase = red phase, 40.2 A.

C2.3.2.3 *Example 3*

Problem:

To determine the maximum demand of the heaviest loaded phase of a block of 80 units comprising the following loads:

Lighting	80 units.
10 A single-phase socket-outlets	80 units.
Single-phase electric ranges	17 units.
2500 W (10.9 A) permanently connected single-phase strip heaters	80 units.
Single-phase quick recovery water heaters	80 units.

Loading not associated with the individual units (communal services):

Communal area lighting and power:

90	60 W lighting points
21	100 W lighting points (total lighting 7500 W)
20	10 A single-phase single socket-outlets
10	3600 W single-phase clothes dryers
2	12 000 W three-phase lift motors (22 A per phase nameplate rating)
1	5500 W three-phase pump motor (10.4 A per phase nameplate rating)

Copyright Standards New Zealand

auto login of Electrical Workers Licensing Group is licenced to temporarily download this document.
Electrical Workers Licensing Group may print this document but not more than 10% of the documents subscribed to may be held in printed form at any one time.

1 4000 W three-phase water supply motor (8.3 A per phase nameplate rating)

Solution:

The method of determining the demand of the heaviest loaded phase, assuming that the electrical installation is balanced as far as practicable over the three phases, in accordance with Table C1, is as follows:

(a) Number of units per phase, three-phase supply = 80/3 = 27 units over each of two phases and 26 units on the other phase. The instructions given in Column 5 of Table C1 would therefore be applicable to the electrical installation other than for the electric ranges.

(b) The number of electric ranges per phase = 17/3 = 6 over each of two phases and 5 on the other phase. The instructions in Column 4 of Table C1 would therefore be applicable to the load group (c), ranges and cooking appliances.

Individual units (27 units):

Equipment	***Load group***	***Column***	***Calculation***	***Result***
Lighting	(a)(i)	5	27 × 0.5	= 13.5 A
Socket-outlets	(b)(i)	5	50 + (27 × 1.9)	= 101.3 A
Electric ranges (6 units)	(c)	4	6 × 2.8	= 16.8 A
Strip heaters	(d)	5	27 × 10.9 × 0.75	= 220.7 A
Water heaters	(f)	5	100 + (27 × 0.8)	= 121.6 A
			Total units loading for heaviest loaded phase =	473.9 A

Communal services:

The lighting is taken as being evenly balanced over the phases, i.e. 7500/3 = 2500 W per phase. [Should the lighting load be arranged for connection to one phase, the loading for load group (h) would be 7500 W.]

The 20 socket-outlets are taken as connected, seven over each of two phases and six on the other phase.

The 10 clothes dryers are taken as connected, three over each of two phases and four on the other phase—loading on heaviest loaded phase = 14 400 W.

The two 12 000 W lift motors = 22 A per phase (nameplate rating)

Motors: 5500 W motor = 10.4 A per phase (nameplate rating)

4000 W motor = 8.3 A per phase (nameplate rating)

Copyright Standards New Zealand

auto login of Electrical Workers Licensing Group is licenced to temporarily download this document.
Electrical Workers Licensing Group may print this document but not more than 10% of the documents subscribed to may be held in printed form at any one time.

COPYRIGHT

Equipment	*Load group*	*Column*	*Calculation*		*Result*
Lighting	(h)	5	$\frac{2500}{230}$	=	10.9 A
A1 Socket-outlets	(i)	5	7×2	=	14.0 A
Clothes dryers	(j)(i)	5	$0.5\left(\frac{14\,400}{230}\right)$	=	31.3 A
Lifts	(k)	5	$(22 \times 1.25) + (22 \times 0.75)$	=	44.0 A
Motors	(l)	5	$10.4 + (8.3 \times 0.5)$	=	14.6 A
Total communal services loading for heaviest loaded phase				=	114.8 A

Total loading for heaviest loaded phase:

= units loading + communal services loading

= 473.9 + 114.8 = 588.7 A.

C2.4 Non-domestic installations

C2.4.1 *Method*

Table C2 provides an allocation of load for different types of equipment connected to consumer mains or submains in a non-domestic installation. The load current is calculated for each equipment load group in the installation, or affected part thereof, and these contributions are then added together to achieve the maximum demand current. The accompanying notes provide clarification of certain provisions and the ensuing examples demonstrate how the calculation is made.

auto login of Electrical Workers Licensing Group is licenced to temporarily download this document.
Electrical Workers Licensing Group may print this document but not more than 10% of the documents subscribed to may be held in printed form at any one time.

Copyright Standards New Zealand

TABLE C2
MAXIMUM DEMAND—NON-DOMESTIC ELECTRICAL INSTALLATIONS

1		2	3
Load group		Residential institutions, hotels, boarding houses, hospitals, accommodation houses, motels[1]	Factories, shops, stores, offices, business premises, schools and churches[1]
(a)	Lighting other than in load group (f)[2]	75% connected load	Full connected load
(b)	(i) Socket-outlets not exceeding 10 A other than those in (b)(ii)[3, 5]	1000 W for first outlet plus 400 W for each additional outlet	1000 W for first outlet plus 750 W for each additional outlet
	(ii) Socket-outlets not exceeding 10 A in buildings or portions of buildings provided with permanently installed heating or cooling equipment or both[3, 4, 5]	1000 W for first socket-outlet, plus 100 W for each additional outlet	
	(iii) Socket-outlets exceeding 10 A[3, 5]	Full current rating of highest rated socket-outlet, plus 50% of full current rating of remainder	Full current rating of highest rated socket-outlet plus 75% of full current rating of remainder
(c)	(i) Appliances for cooking, heating and cooling, including instantaneous water heaters, but not appliances included in load groups (d) and (j) below	Full connected load of highest rated appliance, plus 50% of full load of remainder	Full connected load of highest rated appliance, plus 75% of full load of remainder
*	(ii) Charging equipment associated with electric vehicles	Full connected load of highest rated appliance, plus 75% of full load of remainder	Full connected load of highest rated appliance, plus 75% of full load of remainder
(d)	Motors other than in (e) and (f) below	Full load of highest rated motor, plus 50% of full load of remainder	Full load of highest rated motor, plus 75% of full load of second highest rated motor, plus 50% of full load of remainder
(e)	Lifts	(i) Largest lift motor—125% full load (ii) Next largest lift motor—75% full load (iii) Remaining lift motors—50% full load For the purpose of this load group, the full-load current of a lift motor means the current taken from the supply when lifting maximum rated load at maximum rated speed	

(*continued*)

COPYRIGHT

Copyright Standards New Zealand

Electrical Workers Licensing Group is licenced to temporarily download this document. auto login of Electrical Workers Licensing Group may print this document but not more than 10% of the documents subscribed to may be held in printed form at any one time.

TABLE C2 (*continued*)

1 Load group	2 Residential institutions, hotels, boarding houses, hospitals, accommodation houses, motels[1]	3 Factories, shops, stores, offices, business premises, schools and churches[1]
(f) Fuel dispensing units	(i) Motors: First motor—full load Second motor—50% full load Additional motors—25% full load (ii) Lighting—full connected load	
(g) Heating elements associated with thermal storage heaters, including water heaters, space heaters and similar arrangements, such as swimming pools, spas, saunas	Full-load current	
(h) Welding machines	In accordance with Paragraph C2.5.2, taking into account power factor correction	
(i) X-ray equipment	50% of the full load of the largest X-ray unit, additional units being ignored	
(j) Other equipment not covered by load groups above	By assessment	

NOTES:

1 See Clause 1.6.3 for where the maximum demand for consumer mains, submains, and final subcircuits respectively, may be determined by assessment, measurement or limitation.

2 In the calculation of the connected load, the following ratings are assigned to lighting:

(a) *Incandescent lamps* 60 W or the actual wattage of the lamp to be installed, whichever is the greater, except if the design of the luminaire associated with the lampholder only permits lamps of less than 60 W to be inserted in any lampholder, in which case, the connected load of that lampholder is the wattage of the highest rated lamp which may be accommodated. For multi-lamp luminaires, the load for each lampholder is assessed on the above basis.

(b) *Fluorescent and other discharge lamps* Full connected load, i.e. the actual current consumed by the lighting arrangement, having regard to auxiliary equipment, such as ballasts and capacitors.

(c) *Lighting tracks* 0.5 A/m per phase of track or the actual connected load, whichever is the greater.

3 A socket-outlet installed more than 2.3 m above a floor for the connection of a luminaire may be included as a lighting point in load group (a).

An appliance rated at not more than 150 W, which is permanently connected, or connected by means of a socket-outlet installed more than 2.3 m above a floor, may be included as a lighting point in load group (a).

auto login of Electrical Workers Licensing Group is licenced to temporarily download this document.
Electrical Workers Licensing Group may print this document but not more than 10% of the documents subscribed to may be held in printed form at any one time.

Copyright Standards New Zealand

NOTES TO TABLE C2 (*continued*)

4 Load group (b)(ii) applies to an electrical installation, or portion of an electrical installation, incorporating permanently installed heating and/or cooling equipment specifically provided to render unnecessary the use of socket-outlets for portable electric space heating or cooling appliances. Whether heating or cooling, or both, is deemed necessary to avoid the use of portable heating or cooling equipment will depend on the location and climate involved.

5 For the purpose of determining maximum demand, a multiple combination socket-outlet is regarded as the same number of points as the number of integral socket-outlets in the combination.

C2.4.2 *Examples of calculation*

C2.4.2.1 *Example 4*

Problem:

To determine the maximum demand of the heaviest loaded phase of a 30-unit motel complex supplied by three-phase with the following load:

200 60 W lighting points

30 50 W single-phase exhaust fans (permanently connected)

10 10 A single-phase single socket-outlets (non-permanently heated or cooled area)

90 10 A single-phase single socket-outlets (permanently heated or cooled area)

4 15 A single-phase socket-outlets

1 16 600 W three-phase electric range consisting of two 5000 W hotplates and one 6600 W oven

1 750 W three-phase sewerage pump motor (2.0 A per phase nameplate rating)

1 6000 W single-phase sauna heater

The load is arranged for connection across the three-phase supply as follows:

Red	***White***	***Blue***
70 lights 10 exhaust fans	70 lights 10 exhaust fans	60 lights 10 exhaust fans
5 × 10 A socket-outlets (b)(i)	5 × 10 A socket-outlets (b)(i)	
30 × 10 A socket-outlets (b)(ii)	30 × 10 A socket-outlets (b)(ii)	30 × 10 A socket-outlets (b)(ii)
1 × 15 A socket-outlet 6600 W oven 750 W pump	2 × 15 A socket-outlets 5000 W hotplates 750 W pump	1 × 15 A socket-outlet 5000 W hotplates 750 W pump 6000 W sauna

COPYRIGHT

Copyright Standards New Zealand

auto login of Electrical Workers Licensing Group is licenced to temporarily download this document.
Electrical Workers Licensing Group may print this document but not more than 10% of the documents subscribed to may be held in printed form at any one time.

Solution:

The method of determining the demand in the heaviest loaded phase in accordance with Table C2, Column 2 is as follows:

Equipment	*Load group*	*Calculation*	*Red A*	*White A*	*Blue A*
70 light points	(a)	$\frac{70 \times 60\ \text{W}}{230} \times 0.75$	13.7	13.7	
60 light points	(a)	$\frac{60 \times 60\ \text{W}}{230} \times 0.75$			11.74
10 exhaust fans	(a) [see Note 3 to Table C1]	$\frac{10 \times 50\ \text{W}}{230} \times 0.75$	1.63	1.63	1.63
5 × 10 A socket-outlets	(b)(i)	$1\,000 + (4 \times 400\ \text{W}) = \frac{2600\ \text{W}}{230}$	11.3	11.3	
30 × 10 A socket-outlets	(b)(ii)	$1\,000 + (29 \times 100\ \text{W}) = \frac{3900\ \text{W}}{230}$	16.96	16.96	16.96
1 × 15 A socket-outlet	(b)(iii)	Full current rating	15.0		15.0
2 × 15 A socket-outlets	(b)(iii)	15 A + (15 A × 0.5)		22.5	
6600 W oven	(c)	Full connected load	28.7		
5000 W hotplate	(c)	Full connected load		21.74	21.74
750 W sewer pump	(d)	Full load (nameplate rating)	2.0	2.0	2.0
6000 W sauna heater	(g)	Full-load current			26.09
			89.29	89.83	95.16

Total loading, heaviest loaded phase = blue phase, 95.16 A.

C2.4.2.2 *Example 5*

Problem:

To determine the maximum demand of the heaviest loaded phase of a factory electrical installation supplied by three-phase with the following load:

30 Twin 36 W power factor corrected fluorescent luminaires each with a run current of 0.42 A or as specified by the supplier

10 10 A single-phase single socket-outlets (non-permanently heated or cooled area)

COPYRIGHT

Copyright Standards New Zealand

auto login of Electrical Workers Licensing Group is licenced to temporarily download this document.
Electrical Workers Licensing Group may print this document but not more than 10% of the documents subscribed to may be held in printed form at any one time.

4	10 A single-phase double socket-outlets (permanently heated or cooled area)
1	20 A single-phase socket-outlet
1	15 A single-phase socket-outlet
1	4000 W single-phase airconditioner
1	5500 W three-phase rolling machine motor (10.4 A per phase nameplate rating)
1	4000 W three-phase lathe motor (8.3 A per phase nameplate rating)
1	3600 W single-phase storage water heater
2	250 A output three-phase arc welders (permanently connected) (10 A per phase primary current nameplate rating)
1	30 000 VA two-phase spot welder (permanently connected)—varying operation [Paragraph C2.5.2.3(a)(i)] (50 A per phase primary current nameplate rating)
1	15 000 VA two-phase spot welder (permanently connected)—specific operation at 20% duty cycle [Paragraph C2.5.2.3(a)(ii)] (25 A per phase primary current nameplate rating)

The load is arranged for connection across the three-phase supply as follows:

Red	***White***	***Blue***
15 lights 5 × 10 A socket-outlets (b)(i)		15 lights 5 × 10 A socket-outlets (b)(i)
	4 × 10 A socket-outlets (b)(ii)	
3600 W water heater 15 A socket-outlet	20 A socket-outlet	
		4000 W airconditioner
5500 W rolling machine 4000 W lathe	5500 W rolling machine 4000 W lathe	5500 W rolling machine 4000 W lathe
250 A arc welder 250 A arc welder	250 A arc welder 250 A arc welder	250 A arc welder 250 A arc welder
	30 000 VA spot welder	30 000 VA spot welder
15 000 VA spot welder	15 000 VA spot welder	

auto login of Electrical Workers Licensing Group is licenced to temporarily download this document.
Electrical Workers Licensing Group may print this document but not more than 10% of the documents subscribed to may be held in printed form at any one time.

Copyright Standards New Zealand

download the of temporarily 10% to than licenced more is not Group but Licensing document Workers this print Electrical may of Group login Licensing auto Workers Electrical

Solution:

The method of determining the demand in the heaviest loaded phase in accordance with Table C2, Column 3 is as follows:

Equipment	*Load group*	*Calculation*	*Red A*	*White A*	*Blue A*
Lighting	(a)	15 × 0.42 A	6.3		6.3
10 A socket-outlets	(b)(i)	$1\,000 + (4 \times 750\ \text{W}) = \frac{4\,000\ \text{W}}{230}$	17.39		17.39
10 A socket-outlets (double)	(b)(ii)	$1\,000 + (7 \times 100\ \text{W}) = \frac{1\,700\ \text{W}}{230}$		7.39	
20 A socket-outlet	(b)(iii)	Full current rating		20.0	
15 A socket-outlet	(b)(iii)	Full current rating	15.0		
4000 W airconditioner	(c)	Full connected load			17.39
5500 W rolling machine	(d)	Full load (nameplate rating)	10.4	10.4	10.4
4000 W lathe	(d)	75% full load (nameplate rating) 0.75 × 8.3	6.2	6.2	6.2
3600 W water heater	(g)	Full-load current	15.65		
250 A output arc welder 250 A output arc welder	(h)	100% of rated primary current each (nameplate rating)— Paragraph C2.5.2.2(b)(i)	10.0 10.0	10.0 10.0	10.0 10.0
30 000 VA spot welder [varying operation, Paragraph C2.5.2.3(a)(i)]	(h)	Manually operated, non-automatic—50% of the rated primary current (nameplate rating). 0.5 × 50 = 25 A Groups: Paragraph C2.5.2.3(b) Largest machine—full value obtained from Paragraph C2.5.2.3(a)(i)		25.0	25.0
15 000 VA spot welder [duty cycle 20% Paragraph C2.5.2.3(a)(ii)]	(h)	Multiplier for 20% duty cycle is 0.45 × actual primary current for duty cycle selected (nameplate). 0.45 × 25 = 11.25 A Groups: Paragraph C2.5.2.3(b) Other machines—60% of value obtained from Paragraph C2.5.2.3(a)(ii) i.e. 0.6 × 11.25	6.8	6.8	
			97.74	95.79	102.68

Copyright Standards New Zealand

COPYRIGHT

Total loading, heaviest loaded phase = blue phase, 102.68 A.

C2.4.3 *Alternative calculation method for commercial and light-industrial applications*

C2.4.3.1 *General*

The alternative calculation method set out below may be used for commercial and light-industrial applications. This method is based on experience and energy consumption figures for different types of occupancy within installations.

The values shown in Table C3 depend on factors such as the climate, occupancy hours and levels, energy management systems, and the degree to which equipment is uniformly distributed in the affected area.

An example is provided to demonstrate how the energy demand figures are converted to demand current.

C2.4.3.2 *Example*

A tenancy submains supplies an office of 1500 m^2 in a temperate location that uses a dedicated airconditioning plant with zonal electric reheat in cooler months. Table C3 gives a figure of 50 VA/m^2 for general light and power and 50 VA/m^2 for airconditioning. The total figure is 150 kVA (1500 $m^2 \times 100$ VA/m^2), which equates to approximately 217 A at a 230/400 V operating voltage.

Copyright Standards New Zealand

auto login of Electrical Workers Licensing Group is licenced to temporarily download this document.
Electrical Workers Licensing Group may print this document but not more than 10% of the documents subscribed to may be held in printed form at any one time.

TABLE C3

MAXIMUM DEMAND—ENERGY DEMAND METHOD FOR NON-DOMESTIC INSTALLATIONS

Type of occupancy		Energy demand	
		Range, VA/m²	Average, VA/m²
Offices	Light and power	40–60	50
	Airconditioning:		
	— Cooling	30–40	35
	— Reverse cycle	20–30	25
	— Zonal reheat	40–60	50
	— Variable volume	20	20
* Carparks	Open air	0–10	5
	EV charging	5–15	10
	Basement	10–20	15
	EV charging	10–30	20
Retail shops	Light and power	40–100	70
	Airconditioning	20–40	30
Warehouses	Light and power	5–15	10
	Ventilation	5	5
	Special equipment	(use load details)	
Light industrial	Light and power	10–20	15
	Ventilation	10–20	15
	Airconditioning	30–50	40
	Special equipment	(use load details)	
Taverns, licensed clubs	Total	60–100	80
Theatres	Total	80–120	100

NOTE: EV charging relates to charging equipment associated with electric vehicles and should be considered in addition to all other energy demands.

* C2.4.4 *Alternative method using switchboard diversity*

For switchboards conforming with the AS/NZS 3439 series or the AS/NZS 61439 series, the maximum demand may be determined by multiplying the arithmetic sum of the circuit overload ratings by the appropriate diversity factor in Table C4 below.

auto login of Electrical Workers Licensing Group is licenced to temporarily download this document.
Electrical Workers Licensing Group may print this document but not more than 10% of the documents subscribed to may be held in printed form at any one time.

Copyright Standards New Zealand

* **TABLE C4**

UPSTREAM CIRCUIT LOADING AFTER DIVERSITY

Number of circuit-protection devices downstream	Diversity factor
2 and 3	0.9
4 and 5	0.8
6 to 9	0.7
10 or more	0.6

C2.5 Maximum demand in final subcircuits

C2.5.1 *General*

The maximum demand in final subcircuits is determined—

(a) for single items of equipment, by assessment of the connected load; or

(b) for multiple items of equipment, by limitation of the current rating of a circuit-breaker.

NOTE: Table C9 provides guidance on the loading of points per final subcircuit.

In some applications, the connected equipment may operate in a particular manner that allows for diversity to be applied. This includes welding machines (see Paragraph C2.5.2), domestic cooking appliances (Paragraph C2.5.3) and interlocked equipment (Paragraph C2.5.4).

C2.5.2 *Welding machines*

C2.5.2.1 *Definitions*

For the purpose of this Paragraph (C2.5.2), the following definitions apply:

(a) *Rated primary current*—

(i) for arc welding machines conforming with the AS 60974 series, the marked rated input current, or the marked corrected primary current where fitted with power factor correction equipment; and

(ii) for all other welding machines, the current obtained by multiplying the rated kilovolt amperes (kVA) by 1000 and dividing by the rated primary voltage using the values given on the nameplate.

(b) *Actual primary current* The current drawn from the supply circuit during each welding operation at the particular heat tap and control setting used.

(c) *Duty cycle* The ratio of the time during which welding current flows to the standard period of 1 min, expressed as a percentage.

auto login of Electrical Workers Licensing Group is licenced to temporarily download this document.
Electrical Workers Licensing Group may print this document but not more than 10% of the documents subscribed to may be held in printed form at any one time.

Copyright Standards New Zealand

Example 1:

A spot welder supplied by a 50 Hz system (3000 cycles/min) making six 15-cycle welds per minute would have a duty cycle of—

$$\frac{6 \times 15 \times 100}{3000} = 3\%$$

Example 2:

A seam welder operating two cycles 'ON' and two cycles 'OFF' would have a duty cycle of 50%.

NOTE: The current-carrying capacity of the supply conductors necessary to limit the voltage drop to a value permissible for the satisfactory performance of welding machines may sometimes be greater than that required to prevent overheating of the conductors.

C2.5.2.2 *Arc welding machines*

The following applies to arc welding machines:

(a) *Individual machine* The maximum demand of an individual arc welding machine is deemed to be 100% of the rated primary current.

(b) *Groups of machines* The maximum demand of two or more arc welding machines is deemed to be as follows:

(i) *Two largest welding machines* 100% of each rated primary current.

plus

(ii) *Next largest welding machine* 85% of the rated primary current.

plus

(iii) *Next largest welding machine* 70% of the rated primary current.

plus

(iv) *All other welding machines* 60% of the rated primary current.

C2.5.2.3 *Resistance welding machines*

The following applies to resistance welding machines:

(a) *Individual machines* The maximum demand for an individual resistance welding machine is deemed to be as follows:

(i) *Varying operation* 70% of the rated primary current for seam and automatically fed machines, and 50% of the rated primary current for manually operated, non-automatic machines.

(ii) *Specific operation* The product of the actual primary current and the multiplier given below for the duty cycle at which the welder will be operated under specific operating conditions for which the actual primary current and duty cycle are known and remain unchanged.

auto login of Electrical Workers Licensing Group is licenced to temporarily download this document.
Electrical Workers Licensing Group may print this document but not more than 10% of the documents subscribed to may be held in printed form at any one time.

Copyright Standards New Zealand

Duty cycle %:	50	40	30	25	20	15	10	7.5	≤ 5.0
Multiplier:	0.71	0.63	0.55	0.50	0.45	0.39	0.32	0.27	0.22

(b) *Groups of machines* The demand for two or more resistance welding machines is deemed to be the sum of the values obtained in accordance with Item (a) for the largest welding machine supplied, and 60% of the values obtained in accordance with Item (a) for all other welding machines supplied.

C2.5.3 *Domestic cooking appliances*

The maximum demand current for a final subcircuit connected to a fixed or stationary range, oven or hotplate installed in a domestic installation may be less than the full connected load of the equipment.

Table C5 provides assessed maximum demand values that may be applied to a final subcircuit supplying—

(a) an individual appliance using the energy rating of the appliance; or

(b) more than one appliance, e.g. separate oven and hotplates using the total energy rating of the appliances.

TABLE C5

MAXIMUM DEMAND—DOMESTIC COOKING APPLIANCES

Appliance full-load energy rating per phase	Assessed maximum demand
Not greater than 5000 W	16 A
Greater than 5000 W but not greater than 8000 W	20 A
Greater than 8000 W but not greater than 10 000 W	25 A
Greater than 10 000 W but not greater than 13 000 W	32 A
Greater than 13 000 W	40 A

C2.5.4 *Interlocked equipment*

Where more than one item of equipment is connected to the same final subcircuit, but is interlocked so that only a limited number of items can be connected at one time, e.g. duty and stand-by arrangements, the maximum demand may be assessed from the combination of items that presents the highest simultaneous load.

C3 SIMPLIFIED PROTECTIVE DEVICE SELECTION

As specified in Clause 3.4, the current-carrying capacity of cables is required to be determined from the AS/NZS 3008.1 series. These Standards provide a comprehensive set of tables and calculation methods taking into account different cable/conductor types, installation methods and external influences.

COPYRIGHT

Copyright Standards New Zealand

auto login of Electrical Workers Licensing Group is licenced to temporarily download this document.
Electrical Workers Licensing Group may print this document but not more than 10% of the documents subscribed to may be held in printed form at any one time.

For many typical and simple applications, reference to AS/NZS 3008.1 may not be needed or warranted and an alternative, albeit more conservative, approach may be adopted by limiting the current that can be provided to the circuit by the selection of appropriately rated protective devices.

Tables C6 and C7 provide guidance on the selection of protective devices suitable for use with cables of cross-sectional area from 1 mm^2 to 25 mm^2, for single-phase and three-phase cable applications respectively, under a range of installation conditions.

TABLE C6

SIMPLIFIED PROTECTIVE DEVICE SELECTION FOR CABLES FROM 1 mm^2 TO 25 mm^2 USED IN SINGLE-PHASE APPLICATIONS

Cable type—PVC insulated and sheathed cables, two-core and earth marked V-90	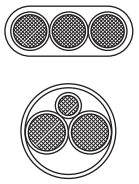

Cable cross-sectional area mm^2	Protective device rating (I_n) A				
	Unenclosed			Enclosed	
	In air	In thermal insulation partially surrounded	In thermal insulation completely surrounded	In air	In ground (see Note 3)
1	16	10	8	13	16
1.5	20	16	10	16	20
2.5	25	20	16	20	32
4	32	25	20	25	40
6	40	32	25	32	50
10	63	50	32	50	63
16	80	63	40	63	80
25	100	80	50	80	100

NOTES TO TABLES C6 AND C7:

1 Protective device ratings (I_n) have been assigned to align with typical current-carrying capacity (I_z) figures for flat and circular cables in AS/NZS 3008.1.1 for Australian conditions. The same ratings can be conservatively applied to New Zealand conditions.

2 Single-circuit installation methods have been provided to keep the tables simple. De-rating factors for groups of cables are not addressed, as it is presumed that circuits will—

(a) be separated from each other; and

(b) operate below maximum current in lower ambient temperature; or

(c) for cables assigned normal ratings of 75°C, any increased temperature effects from grouping will not raise cable temperature above 90°C.

COPYRIGHT

Copyright Standards New Zealand

auto login of Electrical Workers Licensing Group is licenced to temporarily download this document.
Electrical Workers Licensing Group may print this document but not more than 10% of the documents subscribed to may be held in printed form at any one time.

NOTES TO TABLES C6 AND C7 (*continued*):

3 Other cables and installation methods can be sourced from the AS/NZS 3008.1 series, or conservatively compared with the protective device ratings for the following cable installation conditions:

(a) Cables buried direct in the ground may be treated as enclosed in ground.

(b) Unenclosed or enclosed cables in air touching a surface may be treated as in air.

(c) Cables lying on top of thermal insulation may be treated as in thermal insulation partially surrounded.

(d) Cables passing through more than 300 mm of thermal insulation may be treated as in thermal insulation completely surrounded.

TABLE C7

SIMPLIFIED PROTECTIVE DEVICE SELECTION FOR CABLES FROM 1 mm² TO 25 mm² USED IN THREE-PHASE APPLICATIONS

Cable type—PVC insulated and sheathed cables, four-core and earth, marked V-90



Cable cross-sectional area mm²	Protective device rating (I_n) A				
	Unenclosed			Enclosed	
	In air	In thermal insulation partially surrounded	In thermal insulation completely surrounded	In air	In ground
1	13	10	6	13	16
1.5	16	13	8	16	20
2.5	20	16	10	20	25
4	32	20	16	25	32
6	40	32	20	32	40
10	50	40	25	40	50
16	63	50	32	63	63
25	80	63	40	80	80

NOTE: See Notes to Table C6.

C4 SIMPLIFIED VOLTAGE DROP

C4.1 Background

As indicated in Clause 3.6, the voltage drop in cables may be determined from the AS/NZS 3008.1 series. The Standard provides a comprehensive set of tables and calculation methods taking into account different cable/conductor types, operating temperatures and installation methods.

Electrical Workers Licensing Group is licenced to temporarily download this document.
auto login of Electrical Workers Licensing Group may print this document but not more than 10% of the documents subscribed to may be held in printed form at any one time.

Copyright Standards New Zealand

The basic formula used in the AS/NZS 3008.1 series is—

$$V_d = (L \times I \times V_c)/1000 \quad \text{. . . C1}$$

where

V_d = actual voltage drop on circuit; in volts, V

L = route length of circuit; in metres, m

I = circuit current (usually maximum demand); in amperes, A

V_c = cable voltage drop per ampere-metre length of the circuit; in millivolts per ampere-metre, mV/Am

Values of V_c are tabulated in the AS/NZS 3008.1 series.

This formula can be made simpler to apply by expressing the resulting voltage drop in percentage terms, as this allows for the percentage voltage on each section, i.e. consumer mains, submains and final subcircuits, to be added together, regardless of whether it is single-phase or three-phase. When the voltage drop in a circuit is expressed as a percentage of the circuit operating voltage, the formula becomes—

$$\%V_d = (100/V_o) \times (L \times I \times V_c)/1000 \quad \text{. . . C2}$$

$$= (L \times I \times V_c)/(10 \times V_o)$$

where

$\%V_d$ = actual voltage drop in circuit as a fraction of circuit-operating voltage; in percentage, %

V_o = circuit-operating voltage; in volts, V

The above formula can be also be rewritten in favour of the usual factors that are known about a particular circuit. Its intended length and circuit-current as follows:

$$(L \times I)/\%V_d = (10 \times V_o)/V_c$$

the units of which may be expressed as Am per $\%V_d$.

Table C8 provides a simple tabulation of the terms $(10 \times V_o)/V_c$ developed using values for V_c from the AS/NZS 3008.1.1 series for common PVC/PVC cable types operating at 75°C, and 230 V and 400 V for single-phase and three-phase circuits respectively.

A1 Where the conditions of route length and circuit current are known, Table C8 may be used to determine—

(a) the required cable size for a specified percentage voltage drop in the circuit; and

(b) the percentage voltage drop that a particular cable will provide.

Examples are provided to illustrate these operations.

Copyright Standards New Zealand

auto login of Electrical Workers Licensing Group is licenced to temporarily download this document.
Electrical Workers Licensing Group may print this document but not more than 10% of the documents subscribed to may be held in printed form at any one time.

TABLE C8
VOLTAGE DROP—SIMPLIFIED METHOD

Cable conductor size	Single-phase (230 V) circuit	Three-phase (400 V) circuit
	Am per %V_d	Am per %V_d
1 mm^2	45	90
1.5 mm^2	70	140
2.5 mm^2	128	256
4 mm^2	205	412
6 mm^2	306	615
10 mm^2	515	1034
16 mm^2	818	1643
25 mm^2	1289	2588
35 mm^2	1773	3560
50 mm^2	2377	4772
70 mm^2	3342	6712
95 mm^2	4445	8927

C4.2 Examples

To find the minimum cable size for given circuit conditions:

What size cable would be necessary to carry 50 A over a route length of 75 m with a maximum voltage drop of 2.5%?

STEP	PROCESS	CALCULATION
1	Determine required Am by multiplying current by route length	50 × 75 = 3750 Am
2	Determine required capacity for permitted voltage drop, Am per %V_d	3750/2.5 = 1500 Am per %V_d
3	Look up Am per %V_d value in Table C8 which is not less than required value	Single-phase circuit: **35 mm²** (1773 Am per %V_d) Three-phase circuit: **16 mm²** (1643 Am per %V_d)

A1

Electrical Workers Licensing Group may print this document but not more than 10% of the documents subscribed to may be held in printed form at any one time.
auto login of Electrical Workers Licensing Group is licenced to temporarily download this document.
Copyright Standards New Zealand

To find voltage drop in a given circuit:

What is the voltage drop (%) for a single-phase circuit carrying 30 A over a route length of 25 m?

STEP	PROCESS	CALCULATION
1	Determine required Am by multiplying current by route length	30 × 25 = 750 Am
A2 2	Look up Am per %V_d values in Table C8 for possible cable sizes	4 mm^2 = 205 Am per %V_d 6 mm^2 = 306 Am per %V_d 10 mm^2 = 515 Am per %V_d
3	Divide required Am by Am per %V_d values for possible cable sizes	4 mm^2 = 750/205 = **3.65%** 6 mm^2 = 750/306 = **2.45%** 10 mm^2 = 750/515 = **1.46%**

C5 NUMBER OF POINTS CONNECTED TO CIRCUITS

C5.1 Number of circuits

Each item of equipment that has a current rating in excess of 20 A per phase should be connected to a separate and distinct circuit.

Where more than one item of equipment is to be connected to a circuit, consideration needs to be given to—

(a) the number, distribution and type of equipment (lighting, socket-outlets or appliances, etc.), i.e. points, that are to be supplied in combination;

(b) the operating characteristics of the different items of equipment, including seasonal or daily variations;

(c) the circuit current under expected operating conditions and the coordination with cable and protective device ratings to minimize the risk of an overload fault; and

(d) the effects of an overload fault on the circuit, including loss of supply to equipment that performs a special function, e.g. security, emergency, medical or critical information and telecommunications purposes.

Paragraph C5.2, together with Table C9, provides a method that has been used over several editions of this Standard and, provided that care is taken to assess the presence of unusual equipment loads, is considered appropriate for many typical applications.

C5.2 Final subcircuits

Guidance on the determination of the number of socket-outlets, lighting and appliances, i.e. points that may be connected to a final subcircuit, is given in Table C9.

COPYRIGHT

Copyright Standards New Zealand

auto login of Electrical Workers Licensing Group is licenced to temporarily download this document.
Electrical Workers Licensing Group may print this document but not more than 10% of the documents subscribed to may be held in printed form at any one time.

TABLE C9

GUIDANCE ON THE LOADING OF POINTS PER FINAL SUBCIRCUIT

Cable cross-sectional area[1]	Rating of circuit-breaker[1]	Contribution of each point (A) (sum not to exceed rating of circuit-breaker)						Maximum connected load for a range[4, 5]
		Lighting points[6]	10 A single-phase or multiphase socket-outlets[3, 7, 8, 9]		15 A single-phase or multi-phase socket-outlets[8, 9]	20 A single-phase or multi-phase socket-outlets[8, 9]	Permanently connected fixed or stationary appliances[6, 10] or water heaters	
			Non-domestic installations without permanent airconditioning	All domestic installations and non-domestic installations with permanent airconditioning				
mm^2	A							W
1	6	0.5	NP	NP	NP	NP	Connected load	NP
1	8	0.5	NP	NP	NP	NP		NP
1	10	0.5	NP	NP	NP	NP		NP
1	13	0.5	NP	NP	NP	NP		NP
1	16	0.5	NP	NP	NP	NP		NP
1.5	8	0.5	NP	NP	NP	NP		NP
1.5	10	0.5	NP	NP	NP	NP		NP
1.5	13	0.5	NP	NP	NP	NP		NP
1.5	16	0.5	NP	NP	NP	NP		5000
1.5	20	0.5	NP	NP	NP	NP		5000
2.5	10	0.5	NP	NP	NP	NP		NP
2.5	13	0.5	2	1	NP	NP		NP
2.5	16	0.5	2	1	15	NP		5000
2.5	20	0.5	2	1	12	20		8000
2.5	25	0.5	2	1	10	18		8000

(*continued*)

COPYRIGHT

Copyright Standards New Zealand

auto login of Electrical Workers Licensing Group is licenced to temporarily download this document.
Electrical Workers Licensing Group may print this document but not more than 10% of the documents subscribed to may be held in printed form at any one time.

TABLE C9 (*continued*)

Cable cross-sectional area[1]	Rating of circuit-breaker[1]	Contribution of each point (A) (sum not to exceed rating of circuit-breaker)						Maximum connected load for a range[4, 5]
		Lighting points[6]	10 A single-phase or multiphase socket-outlets[3, 7, 8, 9]		15 A single-phase or multi-phase socket-outlets[8, 9]	20 A single-phase or multi-phase socket-outlets[8, 9]	Permanently connected fixed or stationary appliances[6, 10] or water heaters	
			Non-domestic installations without permanent airconditioning	All domestic installations and non-domestic installations with permanent airconditioning				
mm^2	A							W
2.5	32	0.5	2	1	8	16		10 000
4	16	0.5	2	1	15	NP		5000
4	20	0.5	2	1	12	20		8000
4	25	0.5	2	1	10	18		10 000
4	32	0.5	2	1	8	16		10 000
6[2]	20	0.5	2	1	12	20		10 000
6[2]	25	0.5	2	1	10	18		10 000
6[2]	32	0.5	2	1	8	16		13 000
10[2]	32	0.5	2	1	8	16		13 000
10[2]	40	0.5	2	1	8	16		>13 000

NP = denotes socket-outlets not permitted on these circuits

COPYRIGHT

Copyright Standards New Zealand

auto login of Electrical Workers Licensing Group is licenced to temporarily download this document.
Electrical Workers Licensing Group may print this document but not more than 10% of the documents subscribed to may be held in printed form at any one time.

NOTES TO TABLE C9:

1 Cable cross-sectional areas and protective device ratings relate directly to specified installation methods given in Tables C6 and C7, e.g. a 2.5 mm^2 cross-sectional area cable used in conjunction with a 20 A protective device is recommended for use in Table C5 for a single-phase circuit partially surrounded in thermal insulation or from Table C6 for a three-phase circuit unenclosed in air.

2 Figures for 6 mm^2 and 10 mm^2 conductors are given primarily for dedicated circuits supplying permanently connected fixed or stationary appliances, water heaters and ranges. While this Standard does not prescribe the installation of socket-outlets and lighting points on these circuits, the physical limitations of the terminals of these devices may make their connection impractical.

3 For the purposes of determining the number of points, a multiple combination of socket-outlets is regarded as the same number of points as the number of integral socket-outlets in the combination.

4 A hotplate and oven are considered to be one cooking appliance if mounted within one room.

5 Maximum demand is limited by the circuit-breaker on the final subcircuit, which allows for diversity in operation of the range elements and hotplates.

6 *Lighting points* A luminaire is deemed to comprise one or more lighting points, according to the number of points at which it is connected by flexible cords to the installation wiring, or according to the number of sections in which it is switched or controlled. Connections of festoon lighting and decorative lighting are not regarded as lighting points. See Table C1 for track systems and ELV lighting.

A socket-outlet installed more than 2.3 m above a floor for the connection of a luminaire may be included as a lighting point.

An appliance rated at not more than 150 W, which is permanently connected, or connected by means of a socket-outlet installed more than 2.3 m above a floor, may be included as a lighting point.

7 Applies to circuits with 10 A socket-outlets connected where there are two or more circuits in an electrical installation.

8 *Restricted connections* Table C9 precludes the connection of any socket-outlets on conductors having a cross-sectional area less than 2.5 mm^2, except where they are used for the connection of a lighting point, or appliance rated at not more than 150 W and installed more than 2.3 m above a floor [see Note 6 above].

9 The values are intended to be utilized when the final subcircuit is provided for general use. Where it is known that socket-outlets may be used for specific items of electrical equipment, such as dishwashers, room heaters or clothes dryers, the actual load of the equipment should be substituted.

10 Fixed and stationary appliances may be connected permanently or through socket-outlets.

auto login of Electrical Workers Licensing Group is licenced to temporarily download this document.
Electrical Workers Licensing Group may print this document but not more than 10% of the documents subscribed to may be held in printed form at any one time.

Copyright Standards New Zealand

C6 GUIDE TO MAXIMUM NUMBER OF CABLES INSTALLED IN CONDUITS

C6.1 General

This information is intended to be used as a guide for determining the number of cables and circuits that may be installed, without damage, in conduits and other forms of wiring enclosure.

C6.2 Basis of calculations

The number of cables that can be installed in a circular conduit is determined from the ratios of the cross-sectional areas of the enclosure and the cable as follows:

$$\text{Number of cables} = \frac{\text{internal cross-sectional area of enclosure}}{\text{cross-sectional area of cable}} \times \text{space factor}$$

where the space factor recognizes the reduction of space available from the circular geometry of the cables and enclosures.

(a) For one cable in enclosure ..... 0.5.

(b) For two cables in enclosure ..... 0.33.

(c) For three or more cables in enclosure ..... 0.4.

Tables C10 to C12 demonstrate the application of the equation for combinations of common conduit and cable types.

C6.3 Application notes

Cable types and sizes used in Tables C10 to C12 are based on manufacturer's catalogue nominal sizes for cables conforming to AS/NZS 5000.1 and AS/NZS 5000.2. For common building cable types, such as two-core and earth flat PVC/PVC V90 cables, the number of cables has increased because of the smaller cable dimensions of the 450/750 V rated cables.

The conduit sizes and types used in Tables C10 to C12 are based on nominal bore dimensions determined from AS/NZS 2053.2 (rigid UPVC), AS/NZS 2053.5 (corrugated) and AS/NZS 2053.6 (profile wall smooth bore).

The calculation method may also be applied to other combinations of circular and non-circular enclosures, and cables of different types and sizes within the same enclosure, provided that the shape of the cables and enclosures are compatible.

The number of cables determined by the calculation assumes that the enclosure is relatively short in length, is clear of obstructions and distortions, and that the quantity and arrangement of impediments, such as bends, is minimized. Where this is not the case, the number of cables should be reduced and measures taken to ensure that the maximum cable pulling tension and bending radius are not exceeded.

COPYRIGHT

Copyright Standards New Zealand

auto login of Electrical Workers Licensing Group is licenced to temporarily download this document.
Electrical Workers Licensing Group may print this document but not more than 10% of the documents subscribed to may be held in printed form at any one time.

The calculation for the number of cables does not consider the effects of grouping cables on current-carrying capacity, temperature rise and voltage drop. AS/NZS 3008 provides de-rating factors for grouping that need to be considered in determining the suitability of circuits.

auto login of Electrical Workers Licensing Group is licenced to temporarily download this document.
Electrical Workers Licensing Group may print this document but not more than 10% of the documents subscribed to may be held in printed form at any one time.

Copyright Standards New Zealand

TABLE C10

GUIDE TO THE MAXIMUM NUMBER OF SINGLE-CORE SHEATHED CABLES INSTALLED IN CONDUIT

Cable size	Heavy duty rigid UPVC conduit												Corflo conduit				Medium duty corrugated				Medium duty rigid UPVC conduit					
	20	25	32	40	50	63	80 (NZ)	80 (AUS)	100 (NZ)	100 (AUS)	125	150	100 (NZ)	100 (AUS)	125	150	20	25	32	40	16	20	25	32	40	50
PVC/PVC V90																										
1	5	9	16	26	43	71	>100	>100	>100	>100	>100	>100	>100	>100	>100	>100	4	7	14	23	3	6	10	17	28	45
1.5	4	7	13	21	36	59	>100	>100	>100	>100	>100	>100	>100	>100	>100	>100	3	6	11	19	3	5	8	14	23	38
2.5	3	5	10	16	27	44	79	92	>100	>100	>100	>100	>100	>100	>100	>100	2	4	8	14	1	3	6	11	17	28
4	1	3	7	11	19	31	56	64	99	>100	>100	>100	99	>100	>100	>100	1	3	6	10	1	2	4	7	12	20
6	1	3	6	9	16	26	48	55	85	92	>100	>100	85	89	>100	>100	1	2	5	8	1	1	3	6	10	17
10	1	1	4	6	11	18	32	38	58	63	95	>100	58	60	90	>100	1	1	3	5	1	1	2	4	7	11
16	1	1	3	5	8	13	24	28	43	46	70	92	43	45	67	88	1	1	2	4	0	1	1	3	5	8
XLPE/PVC																										
25	0	1	1	3	5	9	16	19	29	31	48	62	29	30	45	60										
35	0	1	1	2	4	7	13	15	24	26	39	52	24	25	38	50										
50	0	1	1	1	3	6	10	12	19	21	31	41	19	20	30	40										
70	0	0	1	1	2	4	8	9	15	16	24	31	15	15	23	30										
95	0	0	1	1	1	3	6	7	11	12	18	24	11	12	17	23										
120	0	0	0	1	1	2	5	6	9	10	15	20	9	10	14	19										
150	0	0	0	1	1	2	4	5	7	8	12	16	7	8	12	16										
185	0	0	0	0	1	1	3	4	6	6	10	13	6	6	10	13										
240	0	0	0	0	1	1	2	3	5	5	8	10	5	5	7	10										
300	0	0	0	0	1	1	1	2	4	4	6	8	4	4	6	8										
400	0	0	0	0	0	1	1	1	3	3	5	7	3	3	5	6										
500	0	0	0	0	0	1	1	1	3	3	4	6	3	3	4	6										
630	0	0	0	0	0	0	1	1	1	2	3	4	1	1	3	4										

COPYRIGHT

auto login of Electrical Workers Licensing Group is licenced to temporarily download this document.
Electrical Workers Licensing Group may print this document but not more than 10% of the documents subscribed to may be held in printed form at any one time.

TABLE C11

GUIDE TO THE MAXIMUM NUMBER OF TWO-CORE AND EARTH CABLES INSTALLED IN CONDUIT

Cable size	Heavy duty rigid UPVC conduit												Corflo conduit				Medium duty corrugated				Medium duty rigid UPVC conduit					
	20	25	32	40	50	63	80 (NZ)	80 (AUS)	100 (NZ)	100 (AUS)	125	150	100 (NZ)	100 (AUS)	125	150	20	25	32	40	16	20	25	32	40	50
PVC/PVC V90																										
1.5	1	1	2	4	7	11	21	24	38	41	62	81	38	40	59	78	1	1	1	3	0	1	1	2	4	7
2.5	0	1	1	3	5	9	16	19	30	32	48	63	30	31	46	61	0	1	1	3	0	1	1	1	3	6
4	0	1	1	2	4	7	13	15	23	25	38	50	23	24	36	48	0	1	1	2	0	0	1	1	2	4
6	0	1	1	2	4	6	12	13	21	23	34	45	21	22	33	43	0	0	1	1	0	0	1	1	2	4
PVC/PVC V75																										
10	0	0	1	1	2	4	7	9	13	15	22	29	13	14	21	28	0	0	1	1	0	0	0	1	1	2
16	0	0	1	1	1	3	6	7	11	11	18	23	11	11	17	22	0	0	0	1	0	0	0	1	1	1
25	0	0	0	1	1	2	4	5	7	8	12	16	7	8	12	16	0	0	0	1	0	0	0	0	1	1
PVC/PVC V90 FLAT																										
1	1	2	5	8	14	23	42	48	75	81	>100	>100	75	78	>100	>100	1	2	4	7	1	1	3	5	9	15
1.5	1	2	5	8	13	22	40	46	71	77	>100	>100	71	74	>100	>100	1	2	4	7	1	1	3	5	9	14
2.5	1	1	3	5	9	15	28	32	50	54	81	>100	50	52	77	>100	1	1	3	5	1	1	1	3	6	10
4	1	1	2	4	6	11	20	23	36	38	58	76	36	37	55	73	0	1	1	3	0	1	1	2	4	7
6	0	1	1	3	5	9	17	19	30	32	49	64	30	31	47	62	0	1	1	3	0	1	1	2	3	6
10	0	1	1	2	4	7	12	14	22	24	36	47	22	23	34	45	0	1	1	1	0	0	1	1	2	4
16	0	0	1	1	2	4	8	9	14	15	23	31	14	15	22	30	0	0	1	1	0	0	0	1	1	2

COPYRIGHT

auto login of Electrical Workers Licensing Group is licenced to temporarily download this document.
Electrical Workers Licensing Group may print this document but not more than 10% of the documents subscribed to may be held in printed form at any one time.

TABLE C12

GUIDE TO THE MAXIMUM NUMBER OF FOUR-CORE AND EARTH CABLES INSTALLED IN CONDUIT

Cable size	Heavy duty rigid UPVC conduit												Corflo conduit				Medium duty corrugated				Medium duty rigid UPVC conduit					
	20	25	32	40	50	63	80 (NZ)	80 (AUS)	100 (NZ)	100 (AUS)	125	150	100 (NZ)	100 (AUS)	125	150	20	25	32	40	16	20	25	32	40	50
PVC/PVC V90																										
1.5	0	1	1	3	5	9	16	18	29	31	47	61	29	30	45	59	0	1	1	2	0	1	1	1	3	5
2.5	0	1	1	2	4	6	12	14	21	23	35	46	21	22	33	44	0	0	1	1	0	0	1	1	2	4
4	0	0	1	1	3	5	9	10	16	18	27	35	16	17	26	34	0	0	1	1	0	0	1	1	1	3
6	0	0	1	1	2	4	8	9	14	15	23	31	14	15	22	29	0	0	1	1	0	0	0	1	1	2
PVC/PVC V75																										
10	0	0	0	1	1	2	5	6	9	10	15	20	9	10	14	19					0	0	0	0	1	1
16	0	0	0	1	1	1	4	4	7	8	12	15	7	7	11	15					0	0	0	0	1	1
25	0	0	0	0	1	1	3	3	5	5	8	11	5	5	8	11					0	0	0	0	0	1
35	0	0	0	0	1	1	2	2	4	4	7	9	4	4	6	9										
50	0	0	0	0	0	1	1	1	3	3	5	6	3	3	5	6										
70	0	0	0	0	0	1	1	1	2	2	4	5	2	2	3	5										
95	0	0	0	0	0	0	1	1	1	1	3	4	1	1	2	3										
XLPE/PVC																										
16	0	0	0	1	1	3	5	6	9	10	15	20	9	10	15	19										
25	0	0	0	0	1	1	3	3	6	6	9	12	6	6	9	12										
35	0	0	0	0	1	1	2	3	4	5	7	10	4	5	7	9										
50	0	0	0	0	0	1	1	2	3	3	6	7	3	3	5	7										
70	0	0	0	0	0	1	1	1	2	2	4	5	2	2	4	5										
95	0	0	0	0	0	0	1	1	1	1	3	4	1	1	3	4										
120	0	0	0	0	0	0	1	1	1	1	2	3	1	1	2	3										

COPYRIGHT

www.sparkspublishing.co.nz Purchased Publication

auto login of Electrical Workers Licensing Group is licenced to temporarily download this document.
Electrical Workers Licensing Group may print this document but not more than 10% of the documents subscribed to may be held in printed form at any one time.

APPENDIX D

MINIMUM SIZES OF POSTS, POLES AND STRUTS FOR AERIAL LINE CONDUCTORS

(Informative)

D1 APPLICATION

D1.1 General

This Appendix sets out a series of tables, which provide information on the sinking depths and sizes of support structures for private aerial lines.

The information in the tables in this Appendix only applies to aerial conductor sizes up to 2 × 4 core 95 mm^2 aluminium (Al) and 4 × 7/3.5 mm^2 copper (Cu) with a maximum total weight of 2.7 kg/m.

NOTE: AS/NZS 7000 and its companion HB 331 can be used to determine support structures for conductor sizes and installation conditions not covered by these tables.

The following types of conductor support structures are covered by this Appendix:

(a) Timber posts and poles.

(b) Square timber struts.

(c) Angle iron struts.

(d) Steel poles.

(e) Steel square section.

(f) Fabricated steel poles.

D1.2 Using the tables in this Appendix

Table D2 gives the forces exerted by the aerial conductor line. This is a function of—

(a) the type of conductor being used;

(b) the span length between supports; and

(c) the design sag.

These factors combine to give the normal tension of an aerial conductor, in kilonewtons (kN). The last column of Table D2 indicates the minimum pole or strut strength needed (S rating) to support the normal load applied by that tension.

Using this strength rating refer to Tables D3 to D13 to select the corresponding size of post, pole or strut. The S rating selected from Tables D3 to D13 has to be equal to or greater than the S rating derived from Table D2.

COPYRIGHT

Copyright Standards New Zealand

auto login of Electrical Workers Licensing Group is licenced to temporarily download this document.
Electrical Workers Licensing Group may print this document but not more than 10% of the documents subscribed to may be held in printed form at any one time.

NOTES:

1 The free length to lowest conductor support shown in the tables is the distance between the lowest conductor support and—

(a) the ground for a pole or post; or

(b) the closest fixing bolt on a structure for a strut.

2 Galvanized steel-pipe posts with outside diameters up to and including 165 mm are Grade 250 steel water pipe commercially available in 6.5 m lengths. Posts specified with diameters of 168 mm have to be Grade 350 structural steel circular hollow sections, which may need to be specially ordered. Steel-pipe posts with a structural grade greater than 250 need to be clearly marked with their tested strength grade.

D2 GENERAL REQUIREMENTS FOR POSTS AND POLES

D2.1 Sinking of posts/poles in ground

Posts/poles need to be securely set in the ground.

If the soil does not provide enough support, e.g. in built-up ground or soft soil, secure posts/poles either by setting them at a greater depth than normally necessary, or by using bearing blocks or shoes. Refer to Table D1 and the notes below.

Where, because of unusual circumstances, the butt of the post/pole cannot be sunk to the necessary depth in the ground, an alternative construction, such as flange mounting on a reinforced concrete structure, may be used. In such cases, the expertise of a structural engineer is needed to ensure that the mounting is suitable for the installation.

The length of the post/pole above ground needs to be assessed when selecting post/pole sizes to obtain necessary clearances.

NOTES:

1 The free length to the lowest conductor support shown in Table D1 is the distance between the lowest conductor support and ground level.

2 *Soil quality* Soil quality is defined according to AS/NZS 7000:

(a) *Poor* Soft clay, poorly compacted sand and soils that tend to absorb large amounts of water (150 kPa/m).

(b) *Medium* Compact medium clay, well-bonded sandy loam, bonded sand and gravel with reasonable surface water drainage (300 kPa/m).

(c) *Good* Well compacted rock soil, hard clay and well-bonded sand and gravel with good surface water drainage (600 kPa/m).

3 *Posts/poles set in concrete* Where a post/pole is set in concrete, it needs to be located centrally in a hole with a size corresponding to a minimum diameter of 100 mm greater than the diameter of the post/pole.

The concrete should be finished as follows:

(a) For a wooden post/pole—not less than 250 mm below ground level.

(b) For a steel post/pole—100 mm above ground level and shaped to shed water.

COPYRIGHT

auto login of Electrical Workers Licensing Group is licenced to temporarily download this document.
Electrical Workers Licensing Group may print this document but not more than 10% of the documents subscribed to may be held in printed form at any one time.

Copyright Standards New Zealand

Setting the post/pole in concrete is equivalent to improving the soil quality by one step, i.e. from ‘poor’ to ‘medium’ or from ‘medium’ to ‘good’. This corresponds to a reduction in the necessary sinking depth of the pole.

The post/pole should be left undisturbed for three days, or long enough to ensure that the concrete has developed adequate strength prior to attaching the aerial line.

4 *Posts/poles set in solid rock* Where a post/pole is set in solid rock, the depth in ground may be reduced by 0.3 m.

D2.2 Timber posts/poles

Timber posts and poles need to be of untreated hardwood or timber with preservative treatment in accordance with AS 3818.11.

Tables D3 to D6 set out the minimum sizes of timber posts or poles of untreated hardwood timber with durability of Class 1 and 2 and strength rating of S3 or better.

The base of timber posts/poles and surrounding ground needs to be treated against insect and fungal attack by environmentally approved methods.

Timber posts/poles need to be capped at the top to prevent water penetration.

The distance between the top anchor bolt and the top of the post/pole should not be less than 200 mm.

D2.3 Steel-pipe posts/poles

The necessary sizes/grades of steel-pipe posts/poles are set out in Tables D7 to D13, with Figure D1 showing how the tables are applied.

NOTE: Hollow steel poles need to be capped at the top to prevent water penetration.

auto login of Electrical Workers Licensing Group is licenced to temporarily download this document.
Electrical Workers Licensing Group may print this document but not more than 10% of the documents subscribed to may be held in printed form at any one time.

Copyright Standards New Zealand

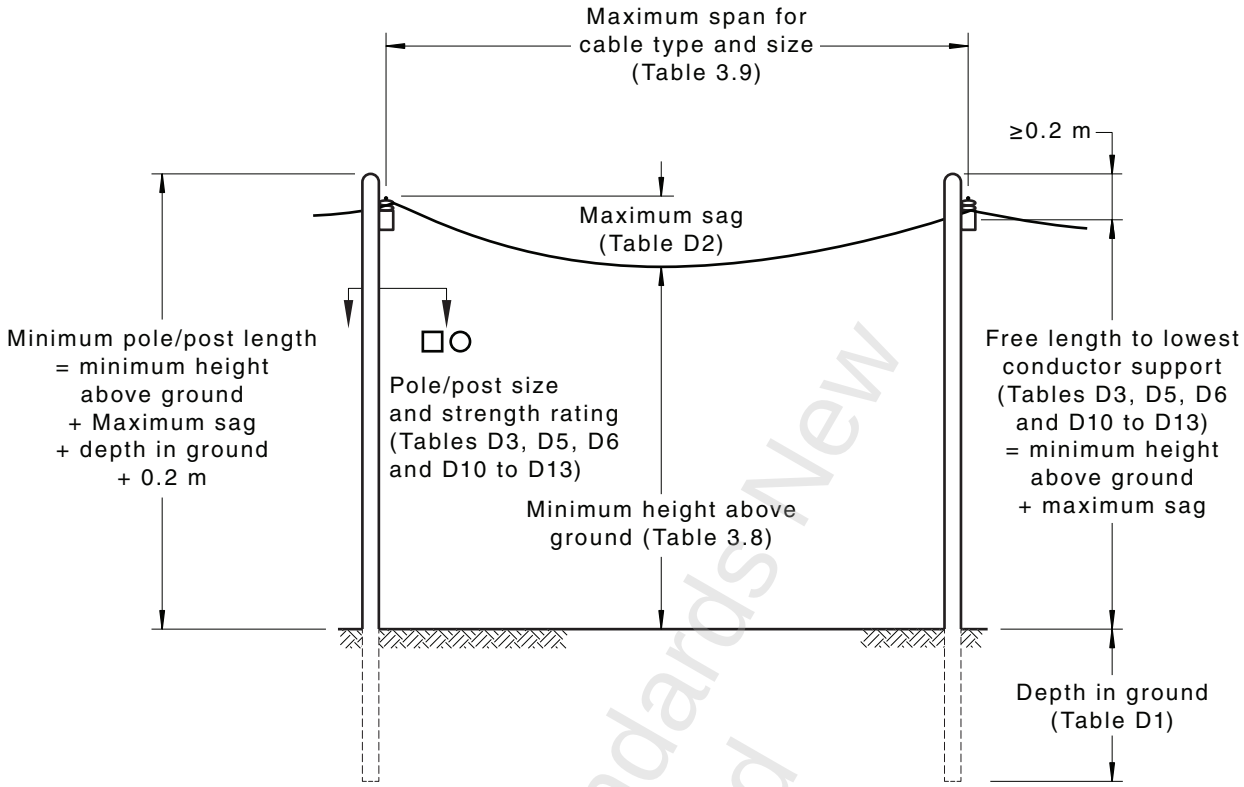

FIGURE D1 GUIDE TO SELECTION OF POLES/POSTS

D3 ATTACHMENTS TO BUILDINGS OR STRUCTURES

D3.1 Responsibility for design

The support needs to be designed and installed using sound engineering practice to withstand calculated forces in the direction of pull. If necessary, the services of a structural engineer should be sought where doubt exists as to the required strength of an attachment.

D3.2 Horizontal and vertical struts

A strut is a straight length of support. Once it is bent, offset or braced, it is classed as a bracket.

The strength rating of struts is set out in Table D2. The sizes of horizontal and vertical struts are set out in Tables D4, D7 and D8, with Figure D2 showing how the tables are applied.

NOTE: Timber or hollow steel struts need to be capped at the top to prevent water penetration.

Two fixing bolts need to be used at a minimum distance of 600 mm apart to fix the strut to a structure.

Copyright Standards New Zealand

auto login of Electrical Workers Licensing Group is licenced to temporarily download this document.
Electrical Workers Licensing Group may print this document but not more than 10% of the documents subscribed to may be held in printed form at any one time.

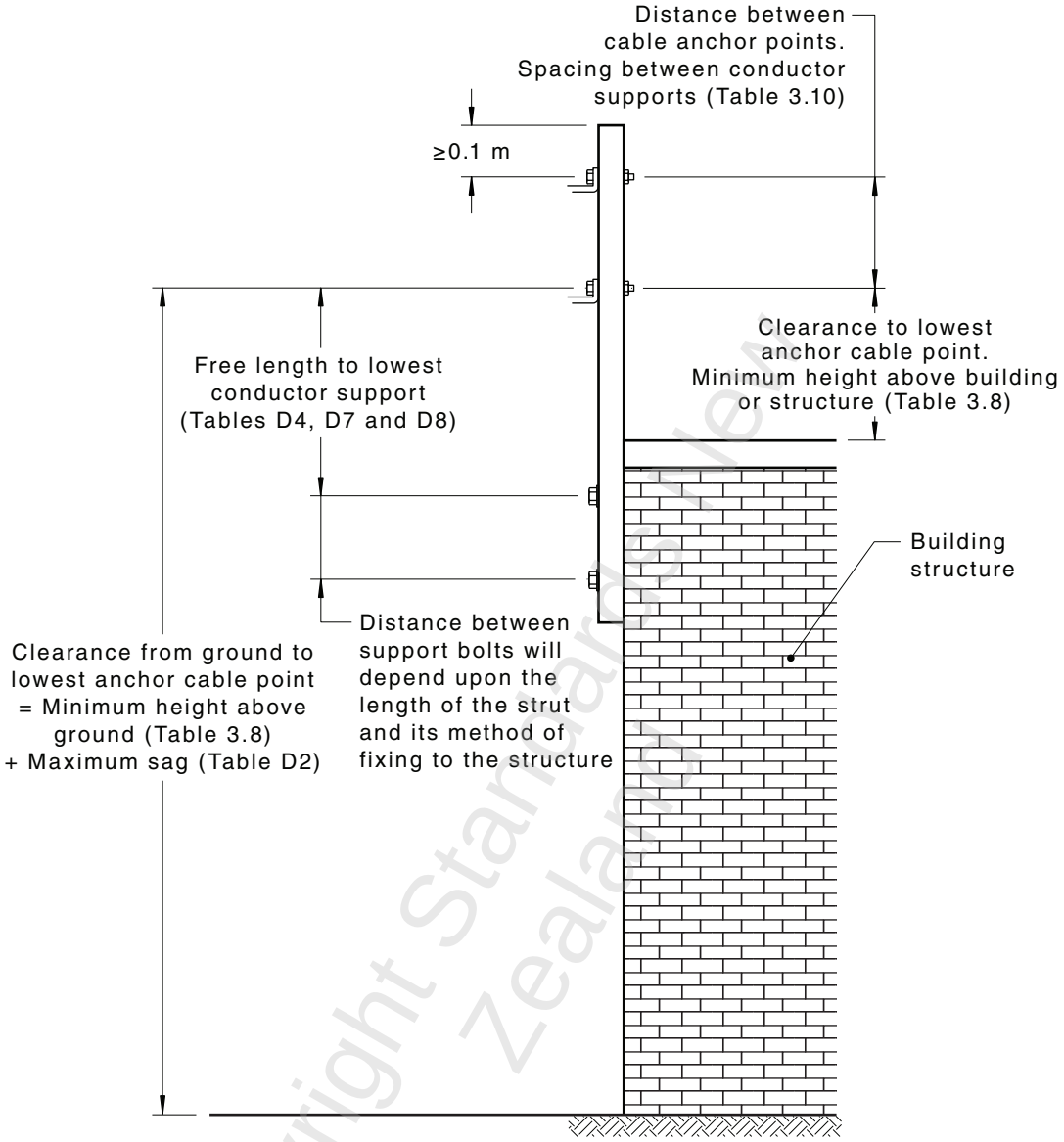

FIGURE D2 GUIDE TO SELECTION OF STRUTS

D4 EXAMPLE USING THE TABLES TO DETERMINE POLE/ POST OR STRUT SIZE

D4.1 Problem

Erect a 100 A, three-phase aerial line using a four-core, 16 mm^2 hard-drawn insulated copper cable, a distance of 19 m over an area used by vehicles.

D4.2 Solution

D4.2.1 *Determine the minimum length of pole/post*

First check that four-core 16 mm^2 hard-drawn insulated copper aerial cable is permitted to span 19 m.

COPYRIGHT

Copyright Standards New Zealand

auto login of Electrical Workers Licensing Group is licenced to temporarily download this document.
Electrical Workers Licensing Group may print this document but not more than 10% of the documents subscribed to may be held in printed form at any one time.

Table 3.9 shows that these conductors may span up to 60 m.

NOTE: The minimum length of a pole/post = minimum height above ground + maximum sag + depth in ground + 0.20 m.

(a) Determine the minimum height of the conductors above the ground.

Table 3.8 shows that insulated live conductors are required to be at a minimum clearance of 4.6 m above an area used by vehicles.

(b) Determine the maximum allowable sag.

(c) Table D2, Column 5 shows that for a 1×4 core, 16 mm^2 hard-drawn insulated copper aerial cable, the maximum straining conductor sag is 0.6 m.

(d) Determine the minimum depth of the pole/post that needs to be supported in the ground.

Table D1 shows that the minimum depth in the ground for a free length to lowest conductor support of 4.6 m varies, depending on the quality of the soil, from 1.8 m for poor quality, to 1.5 m for medium to 1.2 m for good quality. Note 2 to Paragraph D2.1 sets out the criteria on which the soil quality is defined. For the purpose of this example, the soil quality is poor, but it is decided to set the post/pole in concrete. Setting the post/pole in concrete is equivalent to improving the soil quality by one step, as stated in Note 3 of the Table, i.e. for this example from poor quality to medium quality soil.

Then, the minimum depth in ground is 1.5 m.

From Steps (a), (b) and (c) plus an additional length above support of 0.20 m (see Paragraph D2.1).

Minimum length of pole/post = 4.6 + 0.6 + 1.5 + 0.20

= 6.90 m

D4.2.2 *Select the minimum pole/post strength and size*

Determine the minimum post/pole strength rating needed.

Table D2, Column 8 shows that for a 1×4 core, 16 mm^2 hard-drawn insulated copper aerial cable with a 20 metre span, the minimum post/pole strength rating is S18.

Tables D3, D5, D6 and D10 to D13 show the minimum strength ratings and cross-sectional areas of various poles and post types for given free length to lowest conductor support.

NOTE: The free length to lowest conductor support = minimum height above ground + maximum sag.

auto login of Electrical Workers Licensing Group is licenced to temporarily download this document.
Electrical Workers Licensing Group may print this document but not more than 10% of the documents subscribed to may be held in printed form at any one time.

Copyright Standards New Zealand

For this example, any of the following would meet the specifications:

(a) If a square sawn hardwood post is selected, then Table D3 shows that, for a free length to the lowest conductor of 5.2 m with a minimum strength of S18 and concreted in ground, a 175 mm × 175 mm sawn hardwood post is needed (this has a strength rating of S21).

Then the post needed is a 6.90 m × 175 mm × 175 mm sawn hardwood (S21).

(b) If a cut round hardwood pole is selected, Tables D5 and D6 show that for a free length to the lowest conductor of 5.2 m with size reduced from the base of 8 m/2 kN pole, an S23 pole is needed. For 8 m/2 kN pole with the size reduced from the top, an S24 pole is needed. Note that a 2 kN pole may be used, as Table D2 Column 6 shows that, for this example, the nominal aerial tension is 1.35 kN.

Thus the pole needed is either an S23, 8 m pole reduced from the base to 6.90 m or an S24, 8 m pole reduced from the top to 6.90 m.

(c) If Grade 250 steel pipe is selected, Table D10 shows that for a free length to the lowest conductor of 5.2 m and a minimum strength rating of S18, a pipe of 140 mm diameter × 5.0 mm wall thickness is needed. This has an S20 rating.

Thus the post needed is a 6.90 m × 140 mm ∅ × 5.0 mm wall thickness (S20) Grade 250 steel pipe.

(d) If Grade 350 steel pipe is selected, Table D11 shows that for a free length to the lowest conductor of 5.2 m and a minimum strength rating of S18, a pipe of 140 mm diameter and 3.5 mm wall thickness is needed. This has an S19 rating.

Thus the post needed is 6.90 m × 140 mm ∅ × 3.5 mm wall thickness (S19) Grade 350 steel pipe.

(e) If Grade 350 steel square section is selected, Table D12(B) shows that for a free length to the lowest conductor of 5.2 m and a minimum strength rating of S18, a post of 100 mm × 100 mm × 9 mm wall thickness is needed. This has an S20 rating.

Thus the post needed is 6.90 m × 100 mm × 100 mm × 9.0 mm wall thickness (S20) Grade 350 steel section.

(f) If Grade 450 steel square section is selected, Table D13(B) shows that for a free length to the lowest conductor of 5.2 m and a minimum strength rating of S18, there is no suitable size available.

auto login of Electrical Workers Licensing Group is licenced to temporarily download this document.
Electrical Workers Licensing Group may print this document but not more than 10% of the documents subscribed to may be held in printed form at any one time.

Copyright Standards New Zealand

TABLE D1
SINKING OF POSTS/POLES IN GROUND

Free length to lowest conductor support m	Depth in ground m		
	Poor soil	Medium soil	Good soil
3.0	1.6	1.3	1.0
3.3	1.6	1.3	1.0
3.6	1.6	1.3	1.0
3.9	1.6	1.3	1.0
4.2	1.8	1.5	1.2
4.5	1.8	1.5	1.2
4.8	1.8	1.5	1.2
5.1	1.8	1.5	1.2
5.4	1.8	1.5	1.2
5.7	1.8	1.5	1.2
6.0	1.9	1.6	1.3
6.3	1.9	1.6	1.3
6.6	1.9	1.6	1.3
6.9	1.9	1.6	1.3
7.2	1.9	1.6	1.3

Copyright Standards New Zealand

auto login of Electrical Workers Licensing Group is licenced to temporarily download this document.
Electrical Workers Licensing Group may print this document but not more than 10% of the documents subscribed to may be held in printed form at any one time.

TABLE D2
FORCE EXERTED BY AERIAL LINE CONDUCTORS

Aerial line conductor sizes	Total weight of all conductors kg/m	Aerial line span m	Minimum aerial line sag m	Maximum allowable aerial line sag m	Normal aerial line tension kN	Minimum aerial line breaking tension kN	Minimum pole or strut strength S rating
Single-phase insulated aerial lines—Singles or twin twisted							
6 mm^2 up to 16 mm^2 copper conductors (Cu)	0.35 max	10	0.09	0.2	0.49	12.4	S4
		15	0.17	0.4	0.58		S7
		20	0.26	0.6	0.67		S9
		30	0.43	1.0	0.92		S13
		40	0.57	1.3	1.23		S17
		50	0.73	2.0	1.50		S20
16 mm^2 up to 25 mm^2 aluminium conductors (Al)	0.2 max	10	0.09	0.2	0.28	7	S1
		15	0.17	0.4	0.33		S2
		20	0.26	0.6	0.38		S3
		30	0.43	1.0	0.52		S5
		40	0.57	1.3	0.70		S10
		50	0.73	2.0	0.86		S12
Three-phase insulated aerial lines—Singles, twin twisted or bundled							
6 mm^2 up to 10 mm^2 Cu or 16 mm^2 up to 25 mm^2 Al	0.4 max	10	0.09	0.2	0.56	14	S6
		15	0.17	0.4	0.66		S8
		20	0.26	0.6	0.77		S11
		30	0.43	1.0	1.05		S15
		40	0.57	1.3	1.40		S19
		50	0.73	2.0	1.71		S21
16 mm^2 Cu	0.7 max	10	0.09	0.2	0.97	24.8	S14
		15	0.17	0.4	1.16		S16
		20	0.26	0.6	1.35		S18
		30	0.43	1.0	1.83		S22
		40	0.57	1.3	2.46		S25
		50	0.73	2.0	3.00		S28
25 mm^2 Cu or 95 mm^2 Al	1.35 max	10	0.09	0.2	1.88	53.2	S23
		15	0.17	0.4	2.23		S24
		20	0.26	0.6	2.57		S26
		30	0.59	1.0	2.57		S26
		40	1.05	1.3	2.57		S26
		50	1.64	2.0	2.57		S26
2 x 25 mm^2 Cu or 2 × 4 Core 95 mm^2 Al (parallel)	2.7 max	10	0.09	0.2	3.75	106.4	S29
		15	0.17	0.4	4.47		S30
		20	0.26	0.6	5.14		S31
		30	0.59	1.0	5.14		S31
		40	1.05	1.3	5.14		S31
		50	1.64	2.0	5.14		S31

Copyright Standards New Zealand

auto login of Electrical Workers Licensing Group is licenced to temporarily download this document.
Electrical Workers Licensing Group may print this document but not more than 10% of the documents subscribed to may be held in printed form at any one time.

NOTES TO TABLE D2:

1 Maximum allowable aerial line span (m) is limited to the maximum spans shown in Table 3.9 for the type of aerial conductor being used.

2 Maximum allowable aerial line sag (m) has to be allowed for when determining adequate clearances shown in Table 3.8.

3 Poles, posts or support sizes for aerial conductor lines with a total weight greater than the values shown in Table D2 should be determined by individual calculation. AS/NZS 7000 may be used as a guide.

4 Normal aerial line tension will be achieved when the aerial line is erected with the normal aerial line sag at normal ambient temperatures with the conductor de-energized.

TABLE D3

SQUARE HARDWOOD POST (100 MPa TIMBER TO AS 2209) STRENGTH RATINGS

Free length to lowest conductor support m	In ground (either direct or concreted) 100 mm × 100 mm	In ground (either direct or concreted) 125 mm × 125 mm	Direct in ground 150 mm × 150 mm	Concrete in ground 150 mm × 150 mm	Direct in ground 175 mm × 175 mm	Concrete in ground 175 mm × 175 mm	Direct in ground 200 mm × 200 mm	Concrete in ground 200 mm × 200 mm
3.0	S7	S17	S20	S24	S21	S29	S23	S29
3.3	S4	S15	S19	S23	S20	S28	S22	S29
3.6	S3	S14	S17	S22	S19	S26	S20	S28
3.9		S12	S15	S20	S17	S26	S20	S28
4.2		S10	S19		S22	S25	S23	S29
4.5		S8	S18		S20	S24	S23	S28
4.8		S7	S16		S20	S23	S21	S8
5.1		S4	S15		S19	S23	S20	S28
5.4		S3	S13		S17	S21	S20	S26
5.7		S3	S12		S20	S20	S20	S26
6.0			S11		S18	S19	S20	S24
6.3			S10		S17		S19	S23
6.6			S7		S16		S17	S23
6.9			S5		S15		S17	S22
7.2			S3		S14		S15	S20

NOTE: The ‘S’ ratings in this Table may seem inconsistent, but change because of changes of depth in ground.

Copyright Standards New Zealand

auto login of Electrical Workers Licensing Group is licenced to temporarily download this document.
Electrical Workers Licensing Group may print this document but not more than 10% of the documents subscribed to may be held in printed form at any one time.

auto login of Electrical Workers Licensing Group is licenced to temporarily download this document.
Electrical Workers Licensing Group may print this document but not more than 10% of the documents subscribed to may be held in printed form at any one time.

TABLE D4

SQUARE HARDWOOD STRUTS (100 MPa TIMBER TO AS 2209) STRENGTH RATINGS

Free length to lowest conductor support m	100 mm × 100 mm	125 mm × 125 mm	150 mm × 150 mm	175 mm × 175 mm	200 mm × 200 mm
0.3					
0.6	S29				
0.9	S27	S32			
1.2	S23	S29	S32		
1.5	S20	S28	S32		
1.8	S17	S25	S29		
2.1	S14	S23	S29	S32	
2.4	S12	S21	S28	S32	
2.7	S10	S20	S27	S30	
3	S7	S18	S25	S29	S32

TABLE D5

ROUND HARDWOOD POLE (100 MPa TIMBER TO AS 2209) STRENGTH RATINGS—HEIGHT REDUCED FROM BASE

Free length to lowest conductor support m	8 m/ 2 kN	8 m/ 4 kN	8 m/ 6 kN	9.5 m/ 2 kN	9.5 m/ 4 kN	9.5 m/ 6 kN
3.0	S23	S29	S32	S23	S29	S32
3.3	S23	S29	S32	S23	S29	S32
3.6	S23	S29	S32	S23	S29	S32
3.9	S23	S29	S32	S23	S29	S32
4.2	S23	S29	S32	S23	S29	S32
4.5	S23	S29	S32	S23	S29	S32
4.8	S23	S29	S32	S23	S29	S32
5.1	S23	S29	S32	S23	S29	S32
5.4	S23	S29	S32	S23	S29	S32
5.7	S23	S29	S32	S23	S29	S32
6.0	S23	S29	S32	S23	S29	S32
6.3	S23	S29	S32	S23	S29	S32
6.6		S29	S32	S23	S29	S32
6.9		S29	S32	S23	S29	S32
7.2		S29	S32	S23	S29	S32

Copyright Standards New Zealand

COPYRIGHT

TABLE D6

ROUND HARDWOOD POLE (100 MPa TIMBER TO AS 2209) STRENGTH RATINGS—HEIGHT REDUCED FROM TOP

Free length to lowest conductor support m	8 m/ 2 kN	8 m/ 4 kN	8 m/ 6 kN	9.5 m/ 2 kN	9.5 m/ 4 kN	9.5 m/ 6 kN
3.0	S29			S32		
3.3	S29			S30		
3.6	S28			S29		
3.9	S28	S32		S29		
4.2	S28	S32		S29		
4.5	S27	S32		S28		
4.8	S27	S32		S28	S32	
5.1	S25	S30		S28	S32	
5.4	S24	S30	S32	S27	S32	
5.7	S23	S29	S32	S27	S32	
6.0	S23	S29	S32	S27	S32	
6.3	S23	S29	S32	S25	S30	
6.6				S24	S30	
6.9				S24	S30	S32
7.2				S23	S29	S32

NOTES TO TABLES D5 AND D6:

1 *Height reduced from top* A standard pole is reduced in length by cutting off a section from the top of the pole.

2 *Height reduced from base* A standard pole is reduced in length by cutting off a section from the bottom of the pole.

3 Both Tables D5 and D6 show reducing the height—

(a) from the top increases the kN rating of the pole; and

(b) from the bottom results in an unchanged kN rating of the pole.

auto login of Electrical Workers Licensing Group is licenced to temporarily download this document.
Electrical Workers Licensing Group may print this document but not more than 10% of the documents subscribed to may be held in printed form at any one time.

Copyright Standards New Zealand

TABLE D7

ANGLE IRON STRUTS GRADE 250 STRENGTH RATINGS (CROSS-SECTION DIMENSIONS × THICKNESS, mm)

Free length to lowest conductor support m	25 × 25 × 6	30 × 30 × 5	30 × 30 × 6	40 × 40 × 3	40 × 40 × 5	40 × 40 × 6	45 × 45 × 3	45 × 45 × 5	45 × 45 × 6	50 × 50 × 3	50 × 50 × 5	50 × 50 × 6	50 × 50 × 8	55 × 55 × 5	55 × 55 × 6	65 × 65 × 5	65 × 65 × 6	65 × 65 × 8	65 × 65 × 10	75 × 75 × 5	75 × 75 × 6	75 × 75 × 8	75 × 75 × 10	90 × 90 × 6	90 × 90 × 8	90 × 90 × 10	100 × 100 × 6	100 × 100 × 8	100 × 100 × 10	100 × 100 × 12
0.3	S1	S2	S3	S3	S10	S12	S7	S13	S16	S10	S16	S20	S21	S19	S24	S23	S27	S28	S29	S26	S28	S30	S32	S30	S32		S32			
0.6					S2	S3	S1	S3	S6	S2	S7	S10	S12	S10	S16	S14	S17	S20	S23	S17	S21	S24	S27	S24	S28	S29	S27	S29	S30	S32
0.9								S1	S2		S2	S3	S6	S3	S10	S7	S11	S15	S17	S11	S15	S19	S21	S20	S23	S27	S23	S27	S28	S29
1.2												S2	S3	S1	S5	S3	S7	S11	S12	S7	S11	S15	S17	S16	S20	S23	S19	S23	S24	S27
1.5													S1		S3	S2	S3	S7	S9	S3	S7	S11	S14	S12	S16	S20	S15	S20	S23	S24
1.8															S1		S2	S3	S5	S2	S4	S8	S11	S10	S14	S16	S12	S17	S20	S23
2.1																	S1	S3	S3		S3	S5	S7	S7	S11	S14	S10	S14	S17	S20
2.4																		S1	S2		S1	S3	S5	S3	S9	S11	S7	S11	S15	S17
2.7																			S1			S2	S3	S3	S6	S10	S3	S10	S13	S16
3																						S1	S2	S1	S3	S7	S3	S7	S11	S14

COPYRIGHT

Copyright Standards New Zealand

auto login of Electrical Workers Licensing Group is licenced to temporarily download this document.
Electrical Workers Licensing Group may print this document but not more than 10% of the documents subscribed to may be held in printed form at any one time.

TABLE D8

ANGLE IRON STRUTS GRADE 300 STRENGTH RATINGS (CROSS-SECTION DIMENSIONS × THICKNESS, mm)

Free length to lowest conductor support m	125 × 125 × 8	125 × 125 × 10	125 × 125 × 12	125 × 125 × 16	150 × 150 × 10	150 × 150 × 12	150 × 150 × 16	150 × 150 × 19	200 × 200 × 13
0.3									
0.6									
0.9	S30	S32							
1.2	S28	S30	S32		S32				
1.5	S27	S28	S30	S32	S32	S32			
1.8	S24	S28	S28	S30	S29	S32			
2.1	S23	S27	S28	S29	S28	S30	S32	S32	
2.4	S21	S24	S27	S28	S28	S29	S32	S32	
2.7	S20	S23	S25	S28	S27	S28	S30	S30	S32
3	S19	S21	S23	S27	S25	S28	S29	S30	S32

TABLE D9

FABRICATED RIVERTON OCTAGONAL STEEL POLE STRENGTH RATINGS

Free length to lowest conductor support m	Octagonal pole
3.0	
3.3	
3.6	
3.9	
4.2	
4.5	
4.8	S16
5.1	S16
5.4	

NOTE: These poles should not be modified.

auto login of Electrical Workers Licensing Group is licenced to temporarily download this document.
Electrical Workers Licensing Group may print this document but not more than 10% of the documents subscribed to may be held in printed form at any one time.

Copyright Standards New Zealand

TABLE D10

GRADE 250 STEEL-PIPE (DIAMETER × THICKNESS, mm) STRENGTH RATINGS

Free length to lowest conductor support m	34 × 3.2	34 × 4	34 × 4.5	42 × 3.2	42 × 4	42 × 4.9	48 × 3.2	48 × 4	48 × 5.4	60 × 3.6	60 × 4.5	60 × 5.4	76 × 3.6	76 × 4.5	76 × 5.9	89 × 4	89 × 5	89 × 5.9	102 × 4	102 × 5	114 × 4.5	114 × 5.4	140 × 5	140 × 5.4	165 × 5	165 × 5.4
0.3	S15	S17	S19	S22	S23	S26	S24	S27	S28	S29	S32	S32														
0.6	S5	S7	S10	S12	S15	S17	S16	S19	S22	S23	S27	S28	S28	S29	S32	S32			S32							
0.9	S2	S3	S3	S7	S10	S11	S11	S13	S17	S19	S21	S23	S24	S27	S28	S28	S30	S30	S29	S32	S32					
1.2		S1	S2	S3	S5	S7	S7	S10	S12	S15	S17	S20	S21	S23	S27	S27	S28	S29	S28	S29	S30	S32				
1.5				S2	S3	S4	S3	S6	S10	S11	S14	S16	S18	S20	S23	S23	S27	S28	S26	S28	S29	S30	S32			
1.8					S1	S2	S2	S3	S7	S9	S11	S14	S15	S18	S21	S21	S24	S25	S23	S27	S28	S29	S32	S32		
2.1							S1	S2	S3	S6	S10	S11	S13	S16	S20	S19	S23	S23	S21	S24	S27	S28	S30	S30	S32	
2.4									S2	S3	S7	S10	S11	S14	S17	S17	S20	S21	S20	S23	S24	S27	S29	S29	S32	S32
2.7										S3	S4	S6	S10	S12	S15	S15	S19	S20	S18	S22	S23	S25	S28	S29	S31	S32
3										S2	S3	S3	S7	S11	S14	S14	S17	S19	S16	S20	S23	S24	S28	S28	S30	S30
3.3											S2	S2	S5	S9	S12	S12	S16	S17	S15	S19	S20	S23	S27	S28	S29	S30
3.6												S1	S3	S7	S10	S11	S14	S15	S13	S17	S20	S22	S27	S27	S29	S29
3.9													S3	S4	S7	S10	S12	S14	S12	S16	S18	S20	S24	S27	S28	S28
4.2													S2	S3	S5	S7	S11	S12	S11	S15	S17	S20	S23	S24	S28	S28
4.5													S1	S2	S3	S5	S9	S11	S10	S14	S16	S19	S23	S23	S27	S28
4.8														S2	S3	S4	S7	S9	S7	S12	S15	S17	S22	S23	S27	S27
5.1														S1	S2	S3	S5	S7	S7	S11	S14	S16	S21	S22	S25	S27
5.4															S1	S3	S3	S5	S5	S10	S12	S15	S20	S21	S24	S25
5.7															S1	S2	S3	S3	S3	S7	S11	S14	S19	S20	S23	S24
6																S1	S3	S3	S3	S7	S10	S12	S18	S20	S23	S23
6.3																S1	S2	S3	S3	S5	S9	S11	S17	S19	S23	S23
6.6																	S1	S2	S2	S3	S7	S10	S16	S17	S21	S23
6.9																	S1	S2	S1	S3	S7	S9	S15	S16	S20	S21
7.2																		S1		S3	S5	S7	S14	S15	S20	S20

COPYRIGHT

Standards Australia

auto login of Electrical Workers Licensing Group is licenced to temporarily download this document.
Electrical Workers Licensing Group may print this document but not more than 10% of the documents subscribed to may be held in printed form at any one time.

TABLE D11

GRADE 350 STEEL-PIPE (DIAMETER × THICKNESS, mm) STRENGTH RATINGS

Free length to lowest conductor support m	34 × 2	34 × 2.6	42 × 2	42 × 2.6	48 × 2.3	48 × 2.9	60 × 2.3	60 × 2.9	76 × 2.3	76 × 2.3	89 × 2.6	89 × 3.2	89 × 4.8	89 × 5.5	102 × 2.6	102 × 3.2	114 × 3.2	114 × 3.6	114 × 4.8	114 × 6	140 × 3	140 × 3.5	165 × 3	165 × 3.5	168 × 4.8	168 × 6.4	168 × 7.1	219 × 4.8	219 × 6.4
0.3	S15	S17	S21	S23	S25	S28	S29	S30	S32																				
0.6	S5	S7	S11	S15	S17	S20	S23	S25	S28	S29	S30	S32			S32														
0.9	S2	S3	S5	S10	S11	S14	S17	S20	S23	S27	S28	S29	S32	S32	S29	S32	S32												
1.2			S3	S4	S7	S10	S14	S16	S20	S23	S25	S28	S29	S30	S28	S29	S30	S32			S32								
1.5				S1	S3	S5	S11	S13	S17	S21	S23	S24	S28	S29	S26	S28	S29	S30	S32		S32	S32							
1.8					S1	S2	S7	S10	S14	S19	S20	S23	S27	S28	S23	S27	S28	S29	S30	S32	S30	S32	S32						
2.1							S3	S6	S12	S16	S18	S20	S25	S27	S21	S24	S27	S28	S29	S32	S29	S30	S32	S32					
2.4							S2	S3	S10	S14	S16	S19	S23	S24	S20	S23	S25	S27	S28	S30	S28	S29	S30	S32					
2.7							S1	S2	S6	S11	S14	S17	S21	S23	S18	S20	S23	S24	S28	S29	S27	S28	S29	S30					
3									S3	S7	S11	S14	S19	S20	S16	S20	S23	S23	S27	S28	S27	S28	S28	S29	S32				
3.3									S3	S5	S10	S11	S16	S17	S15	S17	S21	S23	S27	S28	S24	S27	S28	S29	S32				
3.6									S1	S3	S7	S10	S14	S15	S12	S15	S20	S21	S24	S27	S23	S27	S27	S28	S32				
3.9										S2	S4	S7	S12	S14	S10	S13	S17	S19	S23	S24	S23	S24	S27	S28	S30	S32			
4.2										S1	S3	S5	S10	S11	S7	S11	S15	S17	S20	S23	S21	S23	S24	S27	S30	S32	S32		
4.5										S1	S3	S3	S7	S10	S8`	S9	S14	S15	S19	S21	S20	S23	S24	S27	S29	S32	S32	S32	
4.8											S2	S3	S6	S7	S4	S7	S12	S14	S17	S20	S19	S21	S23	S25	S29	S32	S32	S32	
5.1											S1	S2	S4	S6	S3	S5	S11	S12	S15	S18	S18	S20	S23	S24	S28	S30	S32	S32	
5.4												S1	S3	S4	S3	S3	S9	S11	S14	S16	S16	S19	S21	S23	S28	S29	S30	S32	
5.7												S1	S3	S3	S2	S3	S7	S9	S12	S15	S15	S17	S20	S23	S27	S29	S29	S32	
6													S2	S3	S1	S3	S6	S7	S11	S14	S14	S15	S20	S23	S27	S28	S29	S30	
6.3													S2	S2	S1	S2	S4	S6	S10	S12	S12	S14	S19	S21	S24	S28	S28	S30	S32
6.6													S1	S2		S1	S3	S5	S9	S11	S11	S13	S17	S20	S24	S27	S28	S29	S32
6.9														S1		S1	S3	S3	S7	S10	S10	S12	S16	S19	S23	S27	S27	S29	S32
7.2														S1			S3	S3	S6	S9	S9	S11	S15	S17	S23	S24	S27	S29	S32

COPYRIGHT

Reproduced by Electrical Workers Licensing Group

auto login of Electrical Workers Licensing Group is licenced to temporarily download this document.
Electrical Workers Licensing Group may print this document but not more than 10% of the documents subscribed to may be held in printed form at any one time.

TABLE D12(A)

GRADE 350 STEEL SQUARE SECTION (WIDTH × THICKNESS, mm) STRENGTH RATINGS

Free length to lowest conductor support m	30 × 2	30 × 2.5	30 × 3	35 × 1.6	35 × 2	35 × 2.5	35 × 3	40 × 1.6	40 × 2	40 × 2.5	40 × 3	40 × 4	50 × 1.6	50 × 2	50 × 2.5	50 × 3	50 × 4	50 × 5	65 × 2	65 × 2.5	65 × 3	65 × 4	65 × 5	65 × 6
0.3	S12	S15	S17	S14	S20	S19	S21	S17	S20	S23	S24	S27	S23	S26	S28	S28	S30	S32	S29	S32	S32			
0.6	S3	S5	S7	S4	S11	S10	S11	S7	S11	S14	S15	S19	S13	S17	S20	S22	S25	S27	S23	S27	S28	S29	S30	S32
0.9	S1	S2	S3	S1	S5	S3	S6	S3	S5	S7	S10	S13	S7	S11	S14	S16	S20	S22	S17	S21	S23	S27	S28	S29
1.2					S2	S2	S3	S1	S2	S3	S5	S10	S3	S7	S10	S12	S16	S18	S14	S17	S20	S23	S25	S27
1.5							S1		S1	S2	S3	S5	S2	S3	S7	S10	S13	S15	S10	S14	S17	S20	S23	S24
1.8										S1	S1	S2		S2	S3	S6	S11	S12	S7	S11	S14	S17	S20	S23
2.1														S1	S3	S3	S7	S9	S4	S10	S11	S15	S18	S20
2.4															S1	S3	S3	S4	S3	S7	S10	S13	S16	S18
2.7																S1	S2	S3	S2	S4	S7	S11	S14	S15
3																	S1	S2	S1	S3	S5	S10	S11	S12
3.3																				S2	S3	S7	S9	S10
3.6																				S1	S3	S4	S6	S7
3.9																					S2	S3	S4	S5
4.2																					S1	S2	S3	S3
4.5																						S1	S2	S3
4.8																						S1	S1	S2
5.1																							S1	S1
5.4																								S1

COPYRIGHT

Copyright Standards Australia

auto login of Electrical Workers Licensing Group is licenced to temporarily download this document.
Electrical Workers Licensing Group may print this document but not more than 10% of the documents subscribed to may be he

TABLE D12(B)

GRADE 350 STEEL SQUARE SECTION (WIDTH × THICKNESS, mm) STRENGTH RATINGS

Free length to lowest conductor support m	75 × 2.5	75 × 3	75 × 3.5	75 × 4	75 × 5	75 × 6	89 × 3.5	89 × 5	89 × 6	100 × 3	100 × 4	100 × 5	100 × 6	100 × 9	125 × 4	125 × 5	125 × 6	125 × 9	150 × 5	150 × 6	150 × 9	200 × 5	200 × 6	200 × 9
0.3	S32																							
0.6	S28	S29	S30	S32	S32																			
0.9	S24	S27	S28	S29	S30	S32	S30	S32		S30	S32													
1.2	S20	S23	S24	S27	S28	S29	S28	S30	S32	S28	S30	S32												
1.5	S17	S20	S23	S24	S27	S28	S27	S29	S30	S27	S29	S30	S32		S32									
1.8	S15	S18	S20	S22	S24	S27	S24	S28	S29	S24	S28	S29	S30	S32	S30	S32								
2.1	S12	S15	S17	S20	S23	S23	S23	S27	S28	S23	S27	S28	S29	S32	S29	S32	S32							
2.4	S10	S14	S15	S17	S20	S23	S20	S24	S27	S20	S24	S28	S28	S30	S28	S30	S32		S32					
2.7	S7	S11	S14	S16	S19	S20	S19	S23	S24	S19	S23	S27	S28	S30	S28	S29	S30		S32					
3	S6	S10	S12	S14	S17	S19	S17	S21	S23	S17	S23	S24	S27	S29	S27	S29	S30	S32	S32	S32				
3.3	S3	S7	S10	S12	S15	S17	S15	S20	S23	S15	S20	S23	S25	S28	S25	S28	S29	S32	S30	S32				
3.6	S3	S6	S9	S11	S13	S14	S14	S19	S21	S13	S20	S23	S24	S28	S24	S28	S28	S32	S29	S32		S32		
3.9	S2	S4	S7	S9	S11	S12	S12	S17	S20	S11	S18	S21	S23	S28	S23	S27	S28	S30	S29	S30		S32		
4.2	S1	S3	S5	S7	S9	S11	S11	S16	S18	S10	S17	S20	S23	S27	S22	S26	S28	S30	S28	S30	S32	S32		
4.5		S3	S3	S4	S7	S9	S10	S15	S16	S9	S15	S19	S21	S24	S20	S24	S27	S29	S28	S29	S32	S31		
4.8		S2	S3	S3	S5	S7	S7	S13	S15	S7	S14	S17	S20	S23	S20	S23	S27	S29	S28	S29	S32	S30	S32	

(*continued*)

COPYRIGHT

Non superseded

auto login of Electrical Workers Licensing Group is licenced to temporarily download this document.
Electrical Workers Licensing Group may print this document but not more than 10% of the documents subscribed to may be held in printed form at any one time.

TABLE 12(B) (*continued*)

Free length to lowest conductor support m	75 × 2.5	75 × 3	75 × 3.5	75 × 4	75 × 5	75 × 6	89 × 3.5	89 × 5	89 × 6	100 × 3	100 × 4	100 × 5	100 × 6	100 × 9	125 × 4	125 × 5	125 × 6	125 × 9	150 × 5	150 × 6	150 × 9	200 × 5	200 × 6	200 × 9
5.1		S1	S2	S3	S3	S5	S6	S11	S13	S5	S12	S16	S18	S21	S19	S23	S24	S28	S27	S28	S32	S29	S32	
5.4			S1	S2	S3	S3	S4	S10	S11	S3	S11	S15	S16	S20	S17	S22	S24	S28	S27	S28	S30	S29	S32	
5.7				S1	S2	S3	S3	S7	S10	S3	S10	S13	S15	S19	S16	S20	S23	S28	S25	S28	S30	S29	S32	
6				S1	S2	S3	S3	S7	S9	S2	S9	S12	S14	S17	S15	S20	S23	S27	S24	S27	S30	S28	S30	
6.3					S1	S2	S2	S5	S7	S1	S7	S11	S12	S16	S14	S19	S21	S25	S23	S27	S29	S28	S30	
6.6						S1	S1	S4	S5		S5	S10	S11	S15	S12	S17	S20	S24	S23	S26	S29	S28	S29	
6.9						S1		S3	S4		S3	S8	S10	S14	S11	S17	S20	S23	S22	S24	S29	S27	S29	
7.2								S3	S3		S3	S7	S9	S12	S10	S15	S19	S23	S20	S24	S28	S27	S29	S32

COPYRIGHT

Copyright Standards New Zealand

auto login of Electrical Workers Licensing Group is licenced to temporarily download this document.
Electrical Workers Licensing Group may print this document but not more than 10% of the documents subscribed to may be held in printed form at any one time.

TABLE D13(A)

GRADE 450 STEEL SQUARE SECTION (WIDTH × THICKNESS, mm) STRENGTH RATINGS

Free length to lowest conductor support m	30 × 1.6	30 × 2	35 × 1.6	35 × 2	35 × 2.3	35 × 2.5	35 × 2.8	35 × 3	40 × 1.6	40 × 2	40 × 2.3	40 × 2.5	40 × 2.8	40 × 3	40 × 4	50 × 1.6	50 × 2	50 × 2.3	50 × 2.5	50 × 2.8	50 × 3	50 × 4
0.3	S13	S15	S17	S20	S21	S23	S23	S24	S20	S23	S24	S25	S27	S27	S29	S24	S28	S29	S29	S30	S30	S32
0.6	S3	S6	S7	S11	S12	S13	S14	S15	S11	S14	S16	S17	S18	S19	S22	S15	S20	S23	S23	S24	S24	S28
0.9	S1	S2	S3	S4	S6	S7	S9	S10	S5	S9	S11	S11	S12	S14	S17	S10	S15	S17	S17	S19	S20	S23
1.2			S1	S2	S3	S3	S3	S3	S3	S4	S6	S7	S9	S10	S11	S5	S11	S12	S14	S15	S15	S19
1.5							S1	S1	S1	S2	S3	S3	S3	S3	S5	S3	S7	S10	S10	S11	S12	S15
1.8												S1	S1	S1	S2	S2	S4	S6	S7	S7	S9	S11
2.1																	S2	S3	S3	S3	S4	S7
2.4																	S1	S1	S2	S2	S3	S3
2.7																				S1	S1	S2
3																						S1

COPYRIGHT

Copyright Standards New Zealand

auto login of Electrical Workers Licensing Group is licenced to temporarily download this document.
Electrical Workers Licensing Group may print this document but not more than 10% of the documents subscribed to may be held in printed form at any one time.

TABLE D13(B)

GRADE 450 STEEL SQUARE SECTION (WIDTH × THICKNESS, mm) STRENGTH RATINGS

Free length to lowest conductor support m	50 × 5	65 × 2	65 × 2.3	65 × 2.5	65 × 3	65 × 4	65 × 5	65 × 6	75 × 2	75 × 2.3	75 × 2.5	75 × 3	75 × 3.5	75 × 4	75 × 5	75 × 6	100 × 3	100 × 4	100 × 5	100 × 6
0.3		S30	S32	S32					S32											
0.6	S28	S24	S27	S28	S29	S32	S32		S27	S28	S29	S32	S32							
0.9	S24	S20	S23	S24	S27	S28	S29	S30	S23	S24	S27	S28	S29	S30	S32	S32	S32			
1.2	S21	S16	S19	S20	S23	S27	S28	S29	S19	S21	S23	S27	S28	S28	S29	S30	S29	S32		
1.5	S17	S12	S15	S17	S20	S23	S25	S27	S15	S19	S20	S23	S25	S27	S28	S29	S28	S30	S32	
1.8	S12	S10	S13	S15	S17	S21	S23	S24	S12	S15	S17	S21	S23	S24	S27	S28	S27	S29	S32	S32
2.1	S9	S7	S10	S12	S15	S19	S20	S22	S10	S13	S15	S19	S21	S23	S24	S27	S24	S28	S30	S32
2.4	S4	S4	S7	S10	S12	S15	S17	S19	S7	S11	S13	S17	S19	S20	S23	S24	S23	S28	S29	S30
2.7	S3	S3	S5	S7	S10	S12	S14	S15	S5	S9	S11	S15	S17	S19	S20	S22	S20	S27	S28	S29
3	S2	S2	S3	S4	S7	S10	S11	S12	S3	S7	S9	S13	S14	S15	S17	S19	S19	S24	S28	S28
3.3		S1	S3	S3	S3	S7	S9	S10	S2	S4	S7	S10	S11	S13	S15	S17	S17	S23	S27	S28
3.6			S1	S2	S3	S4	S6	S7	S1	S3	S4	S7	S10	S11	S13	S14	S15	S23	S24	S27
3.9			S1	S1	S2	S3	S4	S5		S2	S3	S5	S7	S9	S11	S12	S14	S21	S23	S24
4.2					S1	S2	S3	S3		S1	S3	S3	S5	S7	S9	S11	S12	S19	S21	S23
4.5						S1	S2	S3			S2	S3	S3	S4	S7	S9	S11	S17	S20	S21
4.8						S1	S1	S2				S2	S3	S3	S5	S7	S10	S15	S18	S20

(*continued*)

COPYRIGHT

auto login of Electrical Workers Licensing Group is licenced to temporarily download this document.
Electrical Workers Licensing Group may print this document but not more than 10% of the documents subscribed to may be held in printed form at any one time.

TABLE D13(B) (*continued*)

Free length to lowest conductor support m	50 × 5	65 × 2	65 × 2.3	65 × 2.5	65 × 3	65 × 4	65 × 5	65 × 6	75 × 2	75 × 2.3	75 × 2.5	75 × 3	75 × 3.5	75 × 4	75 × 5	75 × 6	100 × 3	100 × 4	100 × 5	100 × 6
5.1							S1	S1				S1	S2	S3	S3	S5	S7	S14	S16	S18
5.4								S1				S1	S1	S2	S3	S3	S5	S12	S15	S16
5.7													S1	S1	S2	S3	S3	S11	S13	S15
6														S1	S2	S3	S3	S10	S12	S14
6.3															S1	S2	S2	S8	S11	S12
6.6																S1		S7	S10	S11
6.9																S1		S5	S8	S10
7.2																		S4	S7	S9

COPYRIGHT

Copyright Standards New Zealand

auto login of Electrical Workers Licensing Group is licenced to temporarily download this document.
Electrical Workers Licensing Group may print this document but not more than 10% of the documents subscribed to may be held in printed form at any one time.

APPENDIX E

ELECTRICAL INSTALLATION REQUIREMENTS IN NATIONAL CONSTRUCTION CODES

(Informative)

auto login of Electrical Workers Licensing Group is licenced to temporarily download this document.
Electrical Workers Licensing Group may print this document but not more than 10% of the documents subscribed to may be held in printed form at any one time.

E1 SCOPE

This Standard contains provisions relating to the protection of an electrical installation from fire and electric shock, which are dependent on, or incorporated in, building requirements. Thus, reference to national construction codes is recommended for clarification of the application and any exceptions. National construction codes also contain a number of other provisions which relate to the design, selection and installation of equipment that forms part of an electrical installation, and which are intended to satisfy objectives for safety, health, amenity, sustainability and energy efficiency.

This Appendix outlines the above provisions in order to inform the electrical industry and practitioners who work with AS/NZS 3000 of measures affecting electrical installations implemented under the National Construction Code (NCC), for Australia, and the New Zealand Building Code (NZBC).

E2 AUSTRALIA

A

E2.1 General

The NCC is written by the Australian Building Codes Board in conjunction with the building and plumbing authorities of the States and Territories. Its goals are nationally consistent health, safety, amenity and sustainability in building construction and plumbing and drainage.

The NCC is adopted under building and plumbing construction legislation in Australian States and Territories, which have responsibility for building construction and plumbing and drainage installations. The NCC is implemented through building certifiers, both local government and private, and other professional practitioners.

The NCC is in three volumes:

(a) Volume One—*Building Code of Australia Class 2 to Class 9 Buildings* (for multi-residential, commercial, industrial and public buildings and structures).

(b) Volume Two—*Building Code of Australia Class 1 and Class 10 Buildings* (for houses and associated structures).

(c) Volume Three—*Plumbing Code of Australia* (for plumbing and drainage associated with all classes of buildings).

COPYRIGHT

The NCC is performance-based and contains fundamental 'performance requirements' together with acceptable solutions, known as 'deemed-to-satisfy provisions', often based on compliance with Standards.

The ABCB also produces a Handbook, *NCC Volume One Energy Efficiency Provisions*. The Handbook, which is available free from the ABCB website (www.abcb.gov.au), has been developed to alert electricians and plumbers to the energy efficiency provisions of the NCC and how these provisions may affect them.

* E2.2 Principles of classification

* E2.2.1 *General*

The classification of a building or part of a building is determined by the purpose for which it is designed, constructed or adapted to be used.

NOTE: Paragraphs E2.2.2, E2.2.3 and E2.2.4 are extracts of Clauses A3.1, A3.2, A3.3 and A3.4 of the *National Construction Code* 2016, Volume One, licensed under a Creative Commons Attribution 4.0 International licence © 2016 Commonwealth of Australia and States and Territories of Australia. The full provisions and the complete NCC 2016 is freely available for download at www.abcb.gov.au.

* E2.2.2 *Classifications*

Buildings are classified as follows (extracted from NCC 2016):

(a) *Class 1* One or more buildings which in association constitute:

(i) Class 1a—a single dwelling being—

(A) a detached house; or

(B) one of a group of two or more attached dwellings, each being a building, separated by a fire-resisting wall, including a row house, terrace house, town house or villa unit; or

(ii) Class 1b—a boarding house, guest house, hostel or the like—

(A) with a total area of all floors not exceeding 300 m^2 measured over the enclosing walls of the Class 1b; and

(B) in which not more than 12 persons would ordinarily be resident; or

(iii) Four or more single dwellings located on one allotment and used for short-term holiday accommodation,

which are not located above or below another dwelling or another Class building other than private garage.

(b) *Class 2* A building containing two or more sole-occupancy units each being a separate dwelling.

Electrical Workers Licensing Group is licenced to temporarily download this document.
auto login of Electrical Workers Licensing Group may print this document but not more than 10% of the documents subscribed to may be held in printed form at any one time.

Copyright Standards New Zealand

(c) *Class 3* A residential building, other than a building of Class 1 or 2, which is a common place of long term or transient living for a number of unrelated persons, including—

(i) a boarding house, guest house, hostel, lodging house or backpackers accommodation; or

(ii) a residential part of a hotel or motel; or

(iii) a residential part of a school; or

(iv) accommodation for the aged, children or people with disabilities; or

(v) a residential part of a health-care building which accommodates members of staff; or

(vi) a residential part of a detention centre.

(d) *Class 4* A dwelling in a building that is Class 5, 6, 7, 8 or 9 if it is the only dwelling in the building.

(e) *Class 5* An office building used for professional or commercial purposes, excluding buildings of Class 6, 7, 8 or 9.

(f) *Class 6* A shop or other building for the sale of goods by retail or the supply of services direct to the public, including—

(i) an eating room, cafe, restaurant, milk or soft-drink bar; or

(ii) a dining room, bar area that is not an assembly building, shop or kiosk part of a hotel or motel; or

(iii) a hairdresser's or barber's shop, public laundry, or undertaker's establishment; or

(iv) market or sale room, showroom, or service station.

(g) *Class 7* A building which is—

(i) Class 7a—a carpark; or

(ii) Class 7b—for storage, or display of goods or produce for sale by wholesale.

(h) *Class 8* A laboratory, or a building in which a handicraft or process for the production, assembling, altering, repairing, packing, finishing, or cleaning of goods or produce is carried on for trade, sale or gain.

(i) *Class 9* A building of a public nature—

(i) Class 9a—a health-care building, including those parts of the building set aside as a laboratory; or

(ii) Class 9b—an assembly building, including a trade workshop, laboratory or the like in a primary or secondary school, but excluding any other parts of the building that are of another Class; or

auto login of Electrical Workers Licensing Group is licenced to temporarily download this document.
Electrical Workers Licensing Group may print this document but not more than 10% of the documents subscribed to may be held in printed form at any one time.

Copyright Standards New Zealand

(iii) Class 9c—an aged care building.

(j) *Class 10* A non-habitable building or structure—

(i) Class 10a—a non-habitable building being a private garage, carport, shed, or the like; or

(ii) Class 10b—a structure being a fence, mast, antenna, retaining or free-standing wall, swimming pool, or the like; or

(iii) Class 10c—a private bushfire shelter.

* **E2.2.3** *Multiple classification*

Each part of a building needs to be classified separately, and—

(a)

(i) where parts have different purposes, if not more than 10% of the floor area of a storey, being the minor use, is used for a purpose which is a different classification, the classification applying to the major use may apply to the whole storey; and

(ii) the provisions of (a) do not apply when the minor use is a laboratory or a part classified as Class 2, 3 or 4; and

(b) a plant room, machinery room, lift motor room, boiler room or the like needs to have the same classification as the part of the building in which it is situated; and

(c) if a building has parts of different classification, each part needs to comply with all the relevant provisions for its classification.

* **E2.2.4** *Parts with more than one classification*

(a) Notwithstanding E2.2.3, a building or part of a building may have more than one classification applying to the whole building or to the whole of that part of the building.

(b) If a building or part of a building has more than one classification applying to the whole building or part in accordance with (a), that building or part needs to comply with all the relevant provisions of the BCA for each classification.

E2.3 Provisions in the NCC

E2.3.1 *General*

Volumes One and Two of the NCC contain provisions that may affect the selection and installation of equipment that forms part of an electrical installation, and which may vary according to the building classification, construction, use and local environment. These provisions are subject to variations between States and Territories, but can be generally categorized as follows:

(a) *Fire safety* These safety measures are also reflected in relevant Clauses of this Standard.

COPYRIGHT

Electrical Workers Licensing Group is licenced to temporarily download this document.
auto login of Electrical Workers Licensing Group may print this document but not more than 10% of the documents subscribed to may be held in printed form at any one time.

Copyright Standards New Zealand

(b) *Health, amenity, sustainability and energy efficiency* These measures relate to the selection and installation of electrical equipment to meet objectives other than safety, including access for people with a disability, and reduced greenhouse gas emissions.

E2.3.2 *Fire safety*

Provisions in the NCC for fire safety include the following:

(a) Fire-resistance of building elements and fire hazard properties of materials.

(b) Penetrations for electrical services in fire-resistant walls, floors and ceilings, and protection by fire-stop seals and systems.

(c) Fire separation of substations and switchrooms for main switchboards supplying emergency equipment.

(d) Separation of switchgear and protection of wiring systems associated with circuits of emergency equipment.

(e) Limitation on electrical services installed in exits and associated paths of travel.

(f) Firefighting equipment systems including fire hydrants, fire hose reels and sprinklers.

(g) Smoke hazard management systems including smoke exhaust.

(h) Smoke detection and alarm systems, fire control centres including fire indicator panels and building occupant warning systems.

(i) Lifts for emergency use or access for people with a disability.

(j) Emergency evacuation lighting, exit and direction signs.

(k) Standby power systems for fire and smoke control systems, and emergency escape lighting in buildings containing atriums.

(l) Thermal insulation requirements of the building fabric (depending on climate zone) that may affect the location of electrical equipment that produces heat, e.g. recessed downlights and bathroom heaters.

(m) Lighting in assembly buildings such as theatres, stages and public halls.

(n) Smoke alarms and evacuation lighting in residential premises.

E2.3.3 *Safety (other than fire safety) health and amenity*

Provisions in the NCC for general safety, health and amenity include the following:

(a) Artificial lighting to enable safe movement.

(b) Lighting, indicator lamps and alarms for refrigerated chambers, strong-rooms and vaults.

auto login of Electrical Workers Licensing Group is licenced to temporarily download this document.
Electrical Workers Licensing Group may print this document but not more than 10% of the documents subscribed to may be held in printed form at any one time.

Copyright Standards New Zealand

COPYRIGHT

(c) Selection and location of socket-outlets and lighting to maintain sound insulation properties.

(d) Accessibility features, including hearing augmentation, signage and location of socket-outlets and switches.

* **E2.3.4** *Sustainability—Energy efficiency*

Provisions in the NCC for sustainability energy efficiency include the following:

(a) Electricity metering separated for lighting, power, airconditioning and other significant plant in commercial and other large buildings.

(b) Limitation on the energy consumption of interior and exterior artificial lighting including the use of automatic switching and dimming controls.

(c) Limitation on electric resistance water heating (including swimming and spa pools) and electric resistance space heating in residential and commercial premises.

(d) Controls to limit unnecessary operation of swimming and spa pool pumps, airconditioning, ventilation or heating systems.

(e) Equipment provided to facilitate the efficient use of energy for artificial heating and cooling, including ceiling fans to provide air movement, sealing devices to prevent the loss of conditioned air, and shading devices to limit unwanted heat gain.

(f) Thermal insulation compensation measures to increase the level of insulation remaining where bulk insulation materials have been removed to provide for the safe operation of recessed equipment.

(g) Ongoing maintenance of ventilation, heating, cooling and heated water systems, including the ability to access systems, to ensure efficient performance.

E3 NEW ZEALAND NZ

E3.1 General

The NZBC is the first schedule to the New Zealand Building Regulations, 1992. The NZBC is a performance-based code that contains provisions under the headings of—

(a) stability;

(b) fire safety;

(c) access;

(d) moisture;

(e) safety of users;

(f) services and facilities; and

(g) energy efficiency.

COPYRIGHT

Copyright Standards New Zealand

auto login of Electrical Workers Licensing Group is licenced to temporarily download this document.
Electrical Workers Licensing Group may print this document but not more than 10% of the documents subscribed to may be held in printed form at any one time.

auto login of Electrical Workers Licensing Group is licenced to temporarily download this document.
Electrical Workers Licensing Group may print this document but not more than 10% of the documents subscribed to may be held in printed form at any one time.

E3.2 Extent of electrical installations in the NZBC

The NZBC clauses that relate to electrical work, and are current and valid at the publication of this Standard, include the following:

(a) *B1 structure* Penetrations in structural members are required to not compromise the integrity of the building.

(b) *C2 prevention of fire occurring* Electrical installations are required to not cause a fire to start.

(c) *C3 fire affecting areas beyond the fire source* Fire separations are required to not be compromised by penetration of electrical wiring.

(d) *D2 mechanical installations for access* Requirements for buildings that require lifts.

(e) *F3 hazardous substances for processes* Requirements for electrical installations in hazardous areas not to cause fire or explosion.

* (f) *F6 visibility in escape routes* The requirements for provision of emergency lighting and other forms of luminance.

(g) *F7 warning systems* Installations of fire, smoke and other alarm systems that activate in an emergency.

(h) *F8 signs* General requirements for signs required by the Building Code.

(i) *G2 laundering* Provision of a socket-outlet for a washing machine.

(j) *G3 food preparation and prevention of contamination* Provisions of electrical outlets for cooking and food storage.

(k) *G4 ventilation* Electrical work associated with the installation and control of mechanical heating systems and ventilating systems.

(l) *G5 interior environment* Installations of systems for electrical space heating.

(m) *G8 artificial lighting* Electrical work associated with the installation of lighting.

(n) *G9 electricity* Links to AS/NZS 3000 and amendments for safe electrical installations.

NOTES:

1 Electrical Safety Certificates, issued in accordance with the Electricity (Safety) Regulations, have to be accepted by Building Consent Authorities as establishing compliance of the electrical work with the provisions of Clause G9 of the Building Code.

2 A Certificate of Compliance for electrical work certifies compliance with requirements of the Electricity (Safety) Regulations, but does not remove the requirement for electrical work to comply with either electrical requirements of other clauses of the Building Code, or non-electrical aspects of the Building Code.

Copyright Standards New Zealand

COPYRIGHT

(o) *G12 water supplies* Electrical work associated with heating and pumping of water.

(p) *G13 foul water* Electrical work associated with the pumping of foul water.

(q) *G14 industrial liquid waste* Electrical work associated with the control and pumping of trade waste.

(r) *H1 energy efficiency* Contains provisions for the efficient use of energy for—

(i) water heating;

(ii) lighting;

(iii) mechanical ventilation; and

(iv) heating and cooling.

E3.3 Building consents

Electrical work requires building consent if—

(a) it relates to a specified system of a building that is or will be covered by the building's compliance schedule; or

(b) it is of a nature that would require a waiver or modification of the Building Code; or

(c) the building owner wishes to apply for a building consent for electrical work.

* Electrical Safety Certificates, issued in accordance with the Electricity Regulations, have to be accepted by Building Consent Authorities as establishing compliance of the electrical work with the provisions of the Building Code.

NOTE: Specified systems are listed in Schedule 1 of the Building (Specified Systems, Change the Use and Earthquake-prone Buildings) Regulations, and include emergency lighting, fire alarms, lifts, ventilation, and airconditioning systems.

auto login of Electrical Workers Licensing Group is licenced to temporarily download this document.
Electrical Workers Licensing Group may print this document but not more than 10% of the documents subscribed to may be held in printed form at any one time.

Copyright Standards New Zealand

APPENDIX F
SURGE PROTECTION DEVICES
(Informative)

F1 SURGE PROTECTIVE DEVICES (SPDs)

F1.1 General

This Appendix provides details on the installation of surge protection devices (SPDs) to provide limitation of transient overvoltages caused by powerline disturbances and by natural events, such as lightning strikes, to or near to exposed conductors, as discussed in Clause 2.7.3.

SPDs do not provide protection against prolonged overvoltage or power outages and brownouts.

One or more of the following conditions could warrant the installation of SPDs in areas:

(a) Where lightning is prevalent.

(b) Where power disturbances are frequent, for example, in industrial areas.

(c) Where the site is at the end of long overhead powerlines.

(d) Where the site is exposed, for example, on a hill.

(e) Where sites may be many hundreds of metres apart, for example, in outer suburban or rural areas.

(f) Where the site contains sensitive electronic equipment, for example, a home office, home theatre, computer network, etc.

AS/NZS 1768 provides a detailed risk assessment on the need for lightning and surge protection. The result of a risk assessment will determine the need for both structural and surge protection. If structural protection is installed, primary surge protection, at least, is also required.

This Appendix does not consider surge protective components that may be incorporated into appliances connected to the electrical installation. The presence of such components may modify the behaviour of the main SPD of the electrical installation and may need additional coordination.

F1.2 Selection and installation of SPDs

F1.2.1 *Location*

Primary SPDs are installed near the origin of the electrical installation or at the main switchboard.

COPYRIGHT

Copyright Standards New Zealand

auto login of Electrical Workers Licensing Group is licenced to temporarily download this document.
Electrical Workers Licensing Group may print this document but not more than 10% of the documents subscribed to may be held in printed form at any one time.

Secondary SPDs are installed at switchboards remote from the main switchboard. Secondary SPDs should be coordinated with the primary SPDs in accordance with the manufacturer's instructions.

Where premises contain sensitive electronic equipment, additional protection at the equipment may also be warranted.

Telecommunications, remote telemetry and industrial process control sites require special attention. AS/NZS 1768 provides further information.

F1.2.2 *Installation*

SPDs should be—

A2

(a) installed after the main switch but prior to any RCD devices. Where the main switch is an RCD, refer to Paragraph F1.2.4;

(b) protected by an appropriate fuse or circuit-breaker separate from the SPD;

(c) connected at the main switchboard between phase and neutral;

NOTE: Figure F1 shows a typical connection of a primary SPD for a single-phase installation.

(d) connected at switchboards remote from the main switchboard and without MEN connection, from each phase to neutral and from neutral to earth;

NOTE: Figure F2 shows a typical installation of a secondary SPD for a single-phase installation.

(e) be legibly and permanently labelled as to their function, in accordance with Clause 2.10.5.1; and

(f) where alarmed to provide status indication, fail safe in operation.

AS/NZS 1768 provides further details on the selection of primary and secondary SPDs.

auto login of Electrical Workers Licensing Group is licenced to temporarily download this document.
Electrical Workers Licensing Group may print this document but not more than 10% of the documents subscribed to may be held in printed form at any one time.

Copyright Standards New Zealand

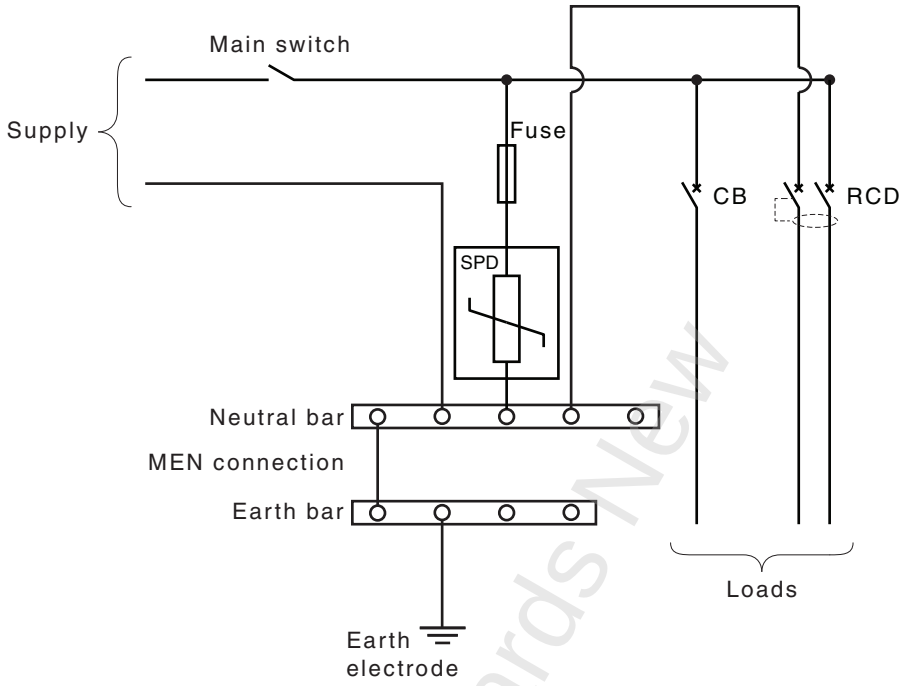

FIGURE F1 TYPICAL PRIMARY SPD AT MAIN SWITCHBOARD

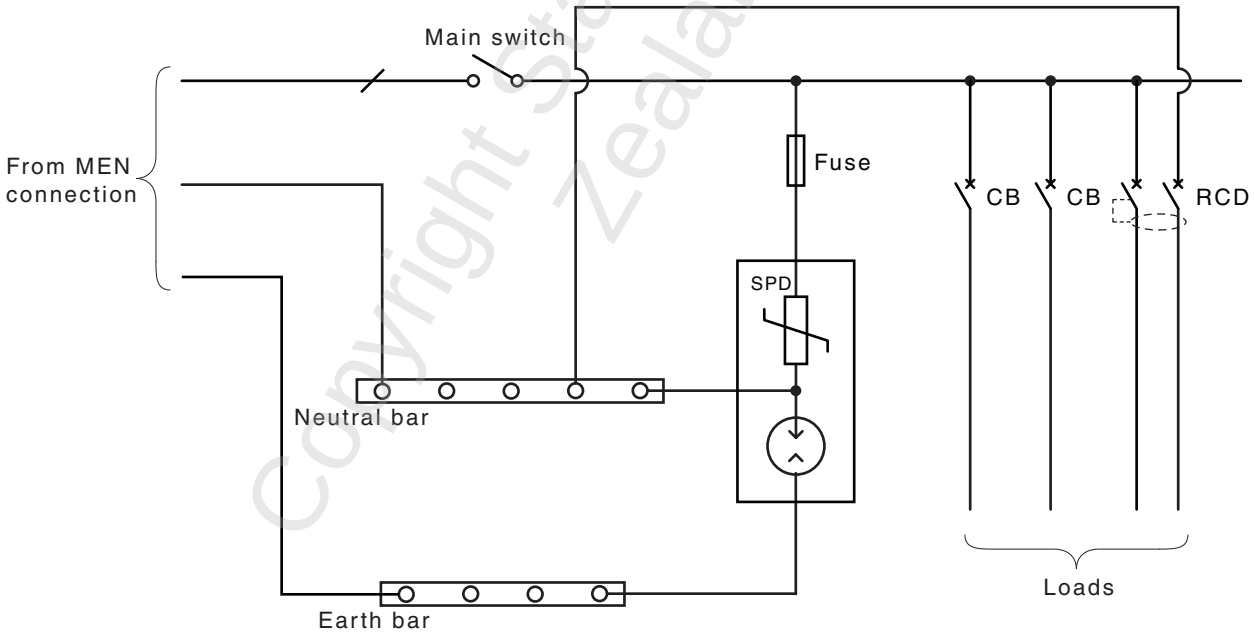

NOTE: This configuration, with an integrated gas discharge tube connected from neutral to earth, is most commonly used and provides protection for all modes of disturbance.

FIGURE F2 TYPICAL SECONDARY SPD AT DISTRIBUTION BOARD

COPYRIGHT

Copyright Standards New Zealand

auto login of Electrical Workers Licensing Group is licenced to temporarily download this document.
Electrical Workers Licensing Group may print this document but not more than 10% of the documents subscribed to may be held in printed form at any one time.

auto login of Electrical Workers Licensing Group is licenced to temporarily download this document.
Electrical Workers Licensing Group may print this document but not more than 10% of the documents subscribed to may be held in printed form at any one time.

F1.2.3 *Selection of surge protection devices (SPDs)*

For most domestic supplies in urban environments, a surge rating of I_{max} = 40 kA per phase for an 8/20 μs impulse and a maximum working voltage of 275 V a.c. to 320 V a.c. is suitable.

In the case of installations in exposed locations in high lightning areas, with long overhead service lines, or industrial and commercial premises, it may be prudent to install SPDs with a higher surge rating (typically 100 kA per phase for an 8/20 μs impulse).

F1.2.4 *Overcurrent protective devices*

SPDs should be protected against short-circuit by suitable overcurrent protective devices. In accordance with Clause 2.5.2, the short-circuit withstand of the SPD, together with the overcurrent protective device, should be not less than the prospective short-circuit current at the point of installation.

The current rating of the SPD overcurrent protective device should be—

(a) as recommended by the SPD manufacturer but not greater than the manufacturer's declared maximum backup fuse rating; and

(b) less than the rating of the immediate upstream protective device.

NOTE: Notwithstanding the above, the following current ratings of HRC fuses or circuit-breakers are suitable for typical domestic applications, such as households:

(a) 32 A for a 40 kA SPD.

or

(b) 63 A for a 100 kA SPD.

If an SPD is installed on the load side of an RCD, the RCD should have a breaking capacity of not less than 3 kA. S-type RCDs, in accordance with AS/NZS 61008.1 and AS/NZS 61009.1 are deemed to satisfy this recommendation.

F1.2.5 *Connecting conductors*

Conductors used to connect an SPD to both the line, via the overcurrent protective device, and to the main earthing or neutral conductor should be consistent with the current rating of the backup fuse or circuit-breaker but should be not less than 6 mm^2, be as short and direct as possible and with no loops.

The total conductor length between the two points of connection including both active and earth/neutral should be less than 1 m (ideally 300 mm–600 mm) overall.

A connection to the neutral conductor should be as close as practicable to the MEN link.

Copyright Standards New Zealand

F2 SURGE PROTECTIVE EARTHING AND BONDING

Where conductive telecommunications conductors and equipment are employed, overvoltage protection may be required at buildings to prevent injury to people and to prevent damage to equipment. An example of how an injury can occur is shown in Figure F3 below.

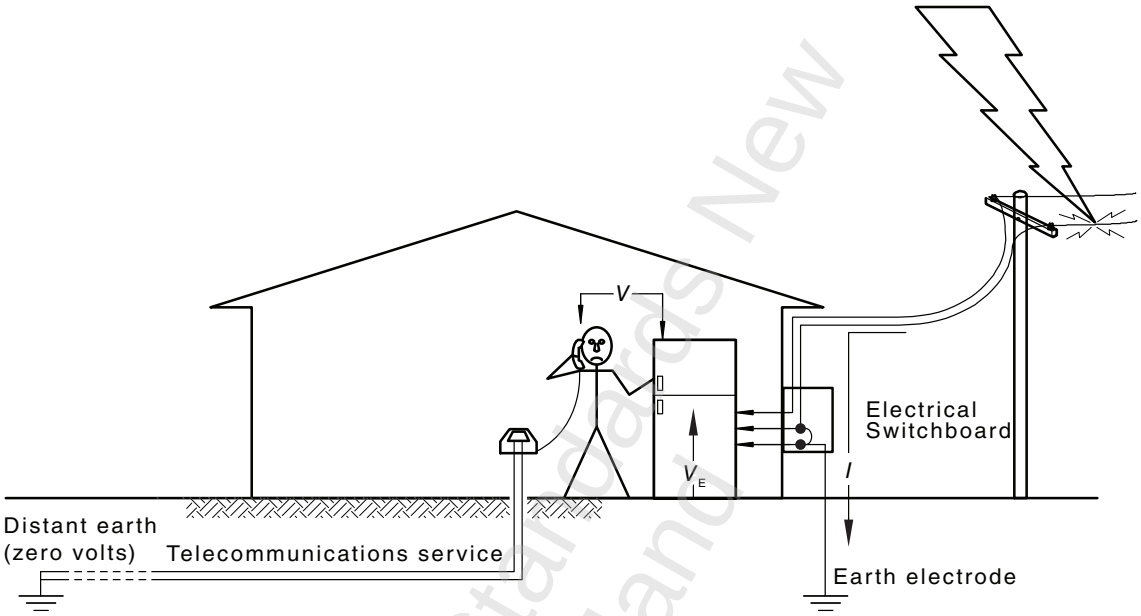

FIGURE F3 EXAMPLE OF HOW A TRANSIENT DEVELOPS
A HAZARDOUS VOLTAGE DIFFERENCE IN A BUILDING

A transient overvoltage on the powerline may result in a high surge current to earth via the MEN link in the electrical switchboard. This momentarily raises the local earth potential typically by tens of thousands of volts. Thus, any object connected to the local earth, e.g. earthed electrical appliances, such as the refrigerator shown, metallic plumbing, concrete floor slab, etc., will momentarily be raised in potential.

To minimize the cost of installing overvoltage protection at domestic premises, all conductive services should enter the building as close as practicable to the main earth bar. To be effective the conductor from the telecommunications primary protection SPD to the main earth bar should be 1.5 m or less in length.

Bonding of metallic services, such as gas and water pipes, and conductive objects, e.g. concrete floors and metallic walls, etc. is recommended.

Primary protection for telecommunication lines is provided by a gas discharge tube type SPD. At domestic premises, this is preferably installed in a wall box near the electrical switchboard and connected to the main earth bar. Figure F4 shows this connection in the protector housing.

COPYRIGHT

Copyright Standards New Zealand

auto login of Electrical Workers Licensing Group is licenced to temporarily download this document.
Electrical Workers Licensing Group may print this document but not more than 10% of the documents subscribed to may be held in printed form at any one time.

A special need exists for earthing of conductive telecommunications equipment. Current standards require a hard-wired earth for some equipment. There is a range of services which need to be bonded to the main earth bar via the telecommunications earth, e.g. telecommunications SPDs and cable screens, antennas, CATV, etc.

Some electrical installation practices make access to the earth electrode and earthing conductor difficult. To achieve the necessary short telecommunication bonding conductor, a bonding bar or terminal external to the main switchboard and mounted outside the meter box or electrical switchboard on an outside wall is recommended for domestic installations. It will assist telecommunications carriers if the bonding bar or terminal is provided when the switchboard is installed.

This method is detailed in AS/CA S009 and is shown below in Figure F4.

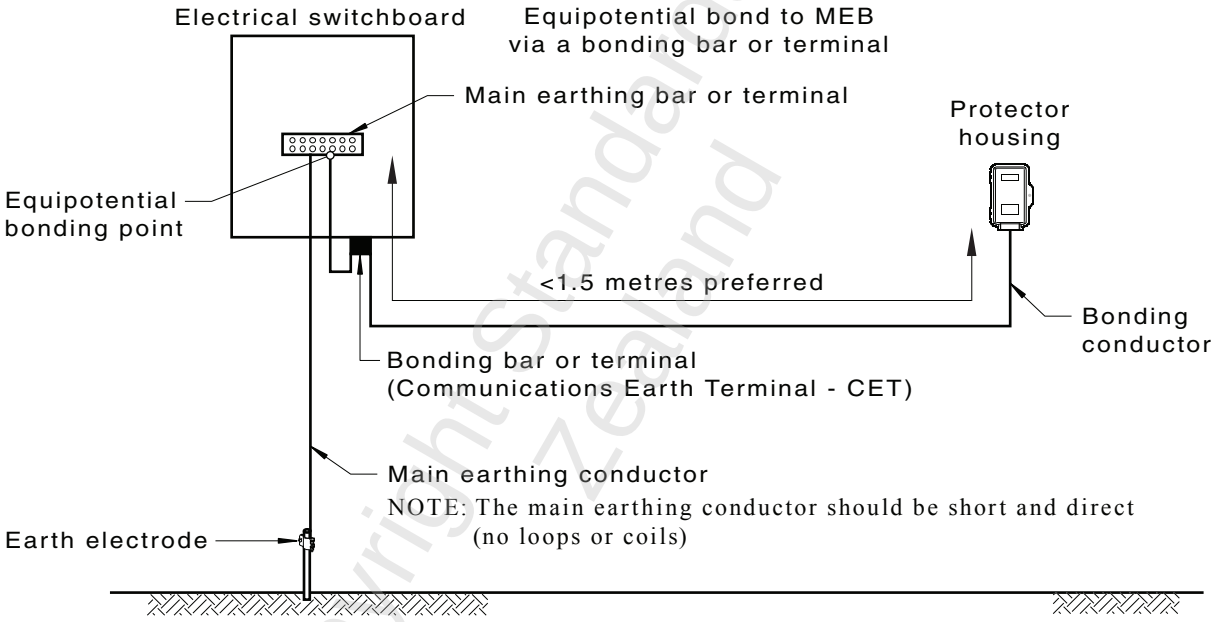

FIGURE F4 PREFERRED METHOD OF BONDING THE PRIMARY TELECOMMUNICATIONS PROTECTOR TO THE MAIN EARTH

Copyright Standards New Zealand

auto login of Electrical Workers Licensing Group is licenced to temporarily download this document.
Electrical Workers Licensing Group may print this document but not more than 10% of the documents subscribed to may be held in printed form at any one time.

APPENDIX G

DEGREES OF PROTECTION OF ENCLOSED EQUIPMENT

(Informative)

The degree of ingress protection of an item of enclosed equipment is expressed as an IP (Ingress Protection) rating, in accordance with AS 60529.

The 'IP' rating is usually written as 'IP' followed by two numbers and, sometimes, an additional letter.

The first number, from 1 to 6, designates a degree of 'protection against solid objects', and 'protection of persons against access to hazardous parts'.

The second number, from 1 to 8, designates a degree of 'protection against entry of water with harmful effects'.

If a specific degree of protection is not designated, an 'X' is used instead of either one or both numbers.

The additional letter, from A to D, when used, designates a degree of 'protection of persons against access to hazardous parts'.

* AS/NZS 60947.3:2015, Annex D, refers to an IP56NW rating for switch disconnectors within enclosures; this is required in AS/NZS 5033 PV Installations. 'NW' is in reference to no water entry into the enclosure. The test procedure is identical to that undertaken to verify the IPx6 rating but no water is to enter the enclosure during the test.

On infrequent occasions, a supplementary letter, H, M, S or W, is used to designate special classes of electrical equipment.

NOTES:

1 Figure G1 gives further information and Figure G2 gives an example to facilitate the understanding of the IP code covered by AS 60529.

2 Refer to AS 60529 for test results.

auto login of Electrical Workers Licensing Group is licenced to temporarily download this document.
Electrical Workers Licensing Group may print this document but not more than 10% of the documents subscribed to may be held in printed form at any one time.

Copyright Standards New Zealand

G1a—First numeral—Protection against ingress of solid objects			Protection of persons against access to hazardous parts with
IP	**Requirements**	**Example**	
0	No protection		Non-protected
1	Full penetration of 50 mm diameter sphere not allowed. Contact with hazardous parts not permitted	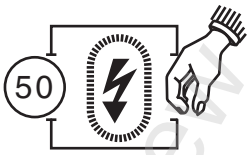	Back of hand
2	Full penetration of 12.5 mm diameter sphere not allowed. The jointed test finger is to have adequate clearance from hazardous parts		Finger
3	The access probe of 2.5 mm diameter is not to penetrate	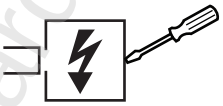	Tool
4	The access probe of 1.0 mm diameter is not to penetrate		Wire
5	Limited ingress of dust permitted (no harmful deposit)	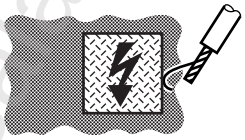	Wire
6	Totally protected against ingress of dust	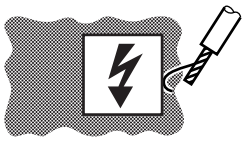	Wire

FIGURE G1 (in part) IP CODES

Copyright Standards New Zealand

auto login of Electrical Workers Licensing Group is licenced to temporarily download this document.
Electrical Workers Licensing Group may print this document but not more than 10% of the documents subscribed to may be held in printed form at any one time.

G1b—Second numeral—Protection against harmful ingress of water			Protection from water
IP	Prescriptions	Example	
0	No protection		Non-protected
1	Protected against vertically falling drops of water. Limited ingress permitted		Vertically dripping
2	Protected against vertically falling drops of water with enclosure tilted 15° from the vertical. Limited ingress permitted		Dripping up to 15° from the vertical
3	Protected against sprays to 60° from the vertical. Limited ingress permitted		Limited spraying
4	Protected against water splashed from all directions. Limited ingress permitted		Splashing from all directions
5	Protected against jets of water. Limited ingress permitted	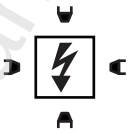	Hosing jets from all directions
6	Protected against strong jets of water. Limited ingress permitted	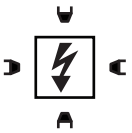	Strong hosing jets from all directions
7	Protected against the effects of immersion between 15 cm and 1 m	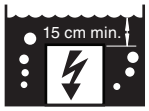	Temporary immersion
8	Protected against long periods of immersion under pressure	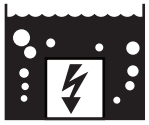	Continuous immersion

FIGURE G1 (in part) IP CODES

Copyright Standards New Zealand

auto login of Electrical Workers Licensing Group is licenced to temporarily download this document.
Electrical Workers Licensing Group may print this document but not more than 10% of the documents subscribed to may be held in printed form at any one time.

G1c—ADDITIONAL LETTER (optional)			
IP	**Requirements**	**Example**	**Protection of persons against access to hazardous parts with**
A For use with first numeral 0	Penetration of 50 mm diameter sphere up to barrier is not to contact hazardous parts	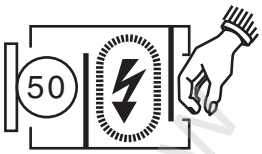	Back of hand
B For use with first numerals 0 and 1	Test finger penetration to a maximum of 80 mm is not to contact hazardous parts		Finger
C For use with first numerals 1 and 2	Wire of 2.5 mm diameter × 100 mm long is not to contact hazardous parts when spherical stop face is partially entered	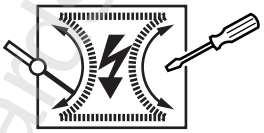	Tool
D For use with first numerals 2 and 3	Wire of 1.0 mm diameter × 100 mm long is not to contact hazardous parts when spherical stop face is partially entered	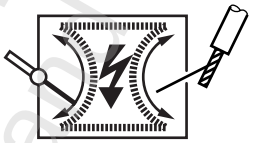	Wire

G1d—SUPPLEMENTARY LETTER (optional)	
Letter	**Significance**
H	High voltage apparatus
M	Tested for harmful effects because of the ingress of water when the movable parts of the equipment, e.g. the rotor of a rotating machine, are in motion
S	Tested for harmful effects because of the ingress of water when the movable parts of the equipment, e.g. the rotor of a rotating machine, are stationary
W	Suitable for use under specified weather conditions and provided with additional protective features or processes

FIGURE G1 (in part) IP CODES

auto login of Electrical Workers Licensing Group is licenced to temporarily download this document.
Electrical Workers Licensing Group may print this document but not more than 10% of the documents subscribed to may be held in printed form at any one time.

Copyright Standards New Zealand

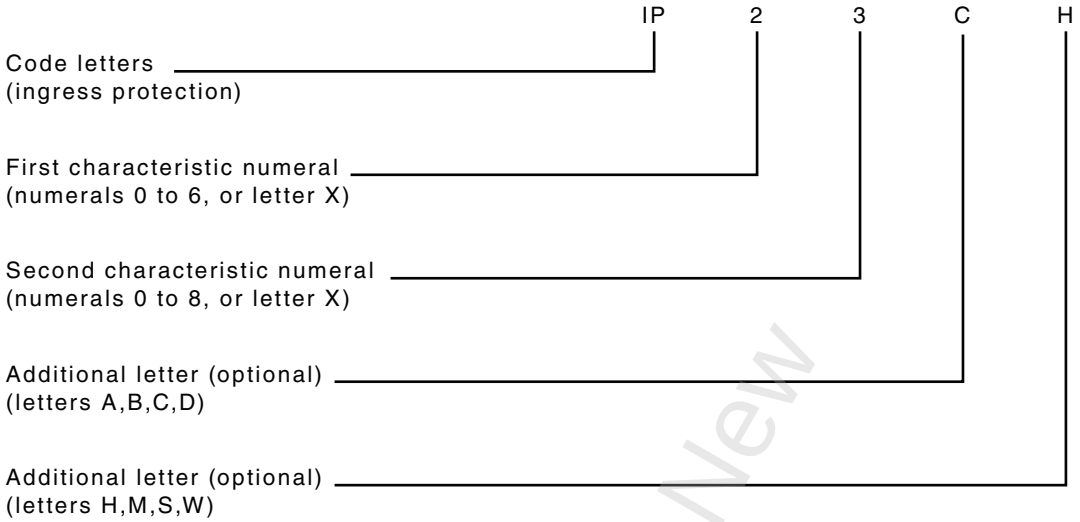

LEGEND:
An enclosure with this designation (IP Code)—
2 protects persons against access to hazardous parts with fingers; and
protects the equipment inside the enclosure against ingress of solid foreign objects having a diameter of 12.5 mm and greater
3 protects the equipment inside the enclosure against the harmful effects because of water sprayed against the enclosure
C protects persons handling tools having a diameter of 2.5 mm and greater and a length not exceeding 100 mm against access to hazardous parts (the tool may penetrate the enclosure up to its full length)
H indicates that the equipment is high voltage apparatus

FIGURE G2 EXAMPLE OF 'IP' RATING

Copyright Standards New Zealand

auto login of Electrical Workers Licensing Group is licenced to temporarily download this document.
Electrical Workers Licensing Group may print this document but not more than 10% of the documents subscribed to may be held in printed form at any one time.

APPENDIX H

WS CLASSIFICATION OF WIRING SYSTEMS

(Informative)

H1 GENERAL

H1.1 Classification

This Appendix provides guidance on the application of the WS classification of wiring systems, in accordance with AS/NZS 3013. Wiring systems, comprising cable, busway, support, fixing and enclosure elements are classified in accordance with the ability of the complete system to—

(a) maintain circuit integrity under fire conditions for a specified period; and

(b) maintain circuit integrity against mechanical damage of specified severity.

NOTE: Elements of a wiring system may need replacement after exposure to a hazard.

This Appendix applies only to wiring systems that are in all other respects safe and suitable for their intended use and comply with relevant Standards.

The use of wiring systems tested in accordance with AS/NZS 3013 may not be necessary where elements of building construction provide satisfactory protection against the effects of fire and mechanical damage.

NOTE: The degree of protection against fire and mechanical damage required of a wiring system depends on the application. To determine specific requirements, reference should be made to Standards dealing with a particular application (see Paragraph H2).

H1.2 Designation

H1.2.1 *General*

The basic designation used to indicate the ability of a wiring system to maintain circuit integrity under fire conditions for a specified period and to maintain circuit integrity against mechanical damage of specified severity consists of a code of four characters.

H1.2.2 *Basic designation*

The designation consists of the following characters:

(a) The characteristic letters ‘WS’ (wiring system).

(b) Followed by a first characteristic numeral, where applicable (see Paragraph H1.3).

COPYRIGHT

Copyright Standards New Zealand

auto login of Electrical Workers Licensing Group is licenced to temporarily download this document.
Electrical Workers Licensing Group may print this document but not more than 10% of the documents subscribed to may be held in printed form at any one time.

(c) Followed by a second characteristic numeral, where applicable (see Paragraph H1.4).

(d) A supplementary letter W, which may be added when required (see Paragraph H1.5).

H1.2.3 *Single characteristic numeral designation*

Where a class of protection is indicated by only one characteristic numeral, the letter X is used in the position normally occupied by the omitted characteristic numeral, e.g. WSX5 or WS2X.

H1.3 First characteristic numeral

The first characteristic numeral represents the time for which the wiring system is able to maintain circuit integrity under specified fire conditions.

Table H1 gives the minimum time the wiring system needs to maintain circuit integrity, when tested in accordance with AS/NZS 3013, in order to be assigned the associated characteristic numeral.

TABLE H1

DEGREE OF PROTECTION INDICATED BY THE FIRST CHARACTERISTIC NUMERAL

Degree of protection indicated by the first characteristic numeral (Protection against exposure to fire)	
First characteristic numeral	**Minimum time for which the circuit integrity of the wiring system is maintained min**
X	Degree of protection does not apply
1	15
2	30
3	60
4	90
5	120

H1.4 Second characteristic numeral

The second characteristic numeral represents the degree of mechanical impact and cutting load to which the wiring system can be subjected without losing circuit integrity.

Table H2 indicates the degree of impact for which the wiring system needs to maintain circuit integrity when tested in accordance with AS/NZS 3013.

Copyright Standards New Zealand

auto login of Electrical Workers Licensing Group is licenced to temporarily download this document.
Electrical Workers Licensing Group may print this document but not more than 10% of the documents subscribed to may be held in printed form at any one time.

TABLE H2

DEGREE OF PROTECTION INDICATED BY THE SECOND CHARACTERISTIC NUMERAL

Degree of protection indicated by the second characteristic numeral (Protection against mechanical damage)	
Second characteristic numeral	**Protected against (see Paragraphs H4.2 and H5)**
X	Degree of protection does not apply
1	Light impact
2	Moderate impact
3	Heavy impact
4	Very heavy impact
5	Extremely heavy impact

H1.5 Supplementary letter W

The addition of the supplementary letter W to a wiring system designation means that the wiring system is able to maintain circuit integrity when—

(a) tested for protection against exposure to fire for the period specified by the first characteristic numeral; and

(b) then hosed with water.

H1.6 Supply and installation

H1.6.1 *Components*

All components of a wiring system assigned a particular classification should comply with AS/NZS 3013.

H1.6.2 *Instructions*

Wiring system suppliers should provide installers with complete, concise details of methods of fixing and support for the wiring system required to achieve its classification in accordance with AS/NZS 3013, including instructions on the correct orientation of the wiring system.

Installers should install wiring systems strictly in accordance with the supplier's instructions. Substitution of appropriately tested supports and fixings of equivalent or greater classification and load capacity are acceptable.

H2 PARTICULAR WIRING SYSTEM APPLICATIONS

H2.1 Building Code

A

The Building Code of Australia (NCC Volume 1) requires wiring systems supplying a substation or main switchboard, that supplies equipment

COPYRIGHT

Copyright Standards New Zealand

auto login of Electrical Workers Licensing Group is licenced to temporarily download this document.
Electrical Workers Licensing Group may print this document but not more than 10% of the documents subscribed to may be held in printed form at any one time.

required to operate in an emergency mode, to have a wiring system rating of—

(a) WS53W, if located in a position subject to damage by motor vehicles;

(b) WS52W, elsewhere; or

(c) otherwise enclosed or protected by construction having a fire-resistance level of not less than120/120/120.

H2.2 Equipment installation Standards

Standards that include requirements for wiring systems with fire or mechanical protection include, without limitation, the following:

AS/NZS 1668.1, *The use of ventilation and airconditioning in buildings*, Part 1: *Fire and smoke control in buildings*, requires a wiring system rating of WS5X for circuits supplying equipment required to operate in a smoke-control mode.

AS 1670.1, *Fire detection, warning, control and intercom systems—System design, installation and commissioning*, Part 1: *Fire*, requires a wiring system mechanical rating of WSX2 for signal circuits and WS51W for fire rated circuits, e.g. incoming telcommunications connection, associated with fire detection and alarm system signals.

AS 1670.4, *Fire detection, warning, control and intercom systems—System design, installation and commissioning*, Part 4: *Sound systems and intercom systems for emergency purposes*, requires a wiring system rating of WS51W for intercom and sound system equipment circuits between fire compartments.

AS 2118 series, *Automatic fire sprinkler systems*.

AS 2118.1, *Automatic fire sprinkler systems*, Part 1: *General systems*, requires a wiring system rating of WS51W for certain alarm signalling circuits.

AS or AS/NZS 2293 series, *Emergency escape lighting and exit signs for buildings*.

AS 2293.1, *Emergency escape lighting and exit signs for buildings*, Part 1: *System design, installation and operation*, requires a rating of WS4X for submains and certain circuits associated with central emergency lighting systems.

AS 2941, *Fixed fire protection installations—Pumpset systems*, requires a wiring system rating of—

(a) WS2X for circuits for residential sprinkler electric pumpsets; and

(b) WS5X for circuits for hydrant and hose reel electric pumpsets.

NZS 4512, *Fire detection and alarm systems in buildings*, requires a wiring system rating of—

(i) WS11 for incoming telecommunications connection; and

COPYRIGHT

Copyright Standards New Zealand

auto login of Electrical Workers Licensing Group is licenced to temporarily download this document.
Electrical Workers Licensing Group may print this document but not more than 10% of the documents subscribed to may be held in printed form at any one time.

(ii) WS51W for intercom and sound system equipment circuits between fire compartments.

H3 FIRE-PROTECTED WIRING SYSTEMS

A wiring system can be provided with protection against exposure to fire in the following two ways:

(a) The use of unenclosed or enclosed wiring systems classified in accordance with AS/NZS 3013 and not depending on fire-rated elements of building construction for thermal protection.

(b) The use of fire-rated elements of building construction to provide thermal protection to wiring systems not complying with the requirements of AS/NZS 3013 for the degree of protection required.

H4 MECHANICALLY PROTECTED WIRING SYSTEMS

H4.1 General

Mechanical protection is provided to prevent accidental damage.

Accordingly, the approach should involve the provision of a protection system with the minimum number of protrusions that are likely to catch or cause damage to vehicles or injury to persons. At the same time, the mechanical protection system needs to provide adequate mechanical protection to prevent damage by contact with vehicles or persons.

In the installation of these systems, a primary consideration should be that, where possible, the wiring system location should be chosen to restrict or to prevent the approach of any object likely to cause damage. Generally, this may be in protected corners or in some area away from the traffic that may cause the damage. Where such a location is not possible, further protection is to be provided.

Wiring systems can be—

(a) unenclosed (where the protection is an integral part of the cable or busway); or

(b) enclosed (where a protective cover is provided outside the wiring system).

The impact and cutting energies for the various classification levels are specified in AS/NZS 3013.

Non-metallic materials may be expected to provide mechanical protection over a temperature range of −15°C to +60°C. The manufacturer may certify extended or reduced ranges that should be externally marked on the protection system.

H4.2 Application of wiring systems

Wiring systems that maintain their circuit integrity under conditions of mechanical damage may be used as indicated below. The following

COPYRIGHT

Electrical Workers Licensing Group is licenced to temporarily download this document.
auto login of Electrical Workers Licensing Group may print this document but not more than 10% of the documents subscribed to may be held in printed form at any one time.

examples are general indications only because the frequency and level of impact in any particular application is difficult to determine:

(a) *WSX1* In internal domestic or office situations where some damage is considered likely.

(b) *WSX2* In passageways in domestic, office and commercial locations where impact by hand trucks and barrows is considered likely.

(c) *WSX3* In car parks and driveways where occasional impact of cars or light vehicles is possible.

(d) *WSX4* In areas where impact by vehicles not exceeding two tonnes but with solid frames is likely.

(e) *WSX5* In areas where impact by laden trucks exceeding two tonnes is likely.

NOTES:

1 Classified wiring systems are tested to withstand the above impact conditions. However, repeated impacts of these levels could lead to failure of the wiring system.

2 Impact energies for the higher classification are severe so that every effort should be made to avoid routing wiring through such areas.

H4.3 Unenclosed wiring systems

For unenclosed wiring systems, mechanically protected cables and busways complying with the requirements of AS/NZS 3013 should be selected. All components used in such wiring systems should be tested to be in accordance with the appropriate requirements of AS/NZS 3013.

H4.4 Enclosed wiring systems

The following recommendations apply to enclosed wiring systems:

(a) If mechanical protection of the wiring system is achieved by an additional enclosure, the protection may be in the form of—

(i) a complete enclosure, such as a conduit, pipe, trunking or other housing; or

(ii) a barrier that is interposed between the wiring system and the possible source of impact.

In both cases, the protection needs to be capable of resisting the impact load.

(b) If cables are contained in conduit or piping, such enclosure should be type tested for the impact energy and ambient temperature range of the location in which it is installed.

(c) If cables are installed in a cable trunking, on a cable tray with covers, or in a similar manner, the enclosure should be type tested.

auto login of Electrical Workers Licensing Group is licenced to temporarily download this document.
Electrical Workers Licensing Group may print this document but not more than 10% of the documents subscribed to may be held in printed form at any one time.

Copyright Standards New Zealand

(d) Enclosed wiring systems for Classifications WSX1, WSX2 and WSX3 should be type-tested. While wiring systems for Classifications WSX4 and WSX5 can be type-tested, it is anticipated that these enclosures will be designed by a structural engineer.

H5 GUIDE TO MECHANICAL PROTECTION CLASSIFICATION

H5.1 General

The systems given in Paragraphs H5.2, H5.3 and H5.4 will generally provide the mechanical protection required for the classification under which they are listed.

H5.2 WSX1 mechanical protection systems

Provide light-duty protection against casual damage by pedestrians as follows:

(a) Wiring systems meeting requirements of the appropriate tests of AS/NZS 3013.

(b) One sheathed cable immediately adjacent to a projecting timber batten or similar corner so that the projection is not less than twice the dimension of the cable in that direction. See Figure H1.

(c) Cabling installed in light or medium-duty conduits complying with AS/NZS 2053 or AS/NZS 61386.

(d) Small sheet-metal ducts with clip-on covers.

(e) PVC duct with clip-on covers.



$D \geq 2d$ (a) Corner of masonry wall

$D \geq 2d$ (b) Timber batten

FIGURE H1 WSX1 PROTECTION BY LOCATION

H5.3 WSX2 mechanical protection systems

Provide protection against damage from hand-powered wheeled devices, e.g. hand trucks and wheelbarrows as follows:

(a) Wiring systems meeting requirements of the appropriate tests of AS/NZS 3013.

(b) Heavy-duty conduits complying with AS/NZS 2053 or AS/NZS 61386.

(c) Armoured cables complying with AS/NZS 5000.1.

(d) Steel duct with a minimum metal thickness of not less than 1.6 mm, a screw fixed lid and unsupported width not exceeding 100 mm.

COPYRIGHT

Copyright Standards New Zealand

auto login of Electrical Workers Licensing Group is licenced to temporarily download this document.
Electrical Workers Licensing Group may print this document but not more than 10% of the documents subscribed to may be held in printed form at any one time.

(e) Fabricated steel cover with metal not less than 1.6 mm thick, and un-reinforced unsupported width not exceeding 100 mm.

(f) Any WSX1 system with a 10 mm cover of plaster or concrete.

(g) MIMS cable complying with AS/NZS 60702.1.

Fixings used for WSX2 wiring systems are required to be capable of withstanding the specified mechanical tests.

H5.4 WSX3 mechanical protection systems

Provide medium-duty protection against damage from vehicles, such as cars and light commercial vehicles, as follows:

(a) Wiring systems meeting requirements of appropriate tests of AS/NZS 3013.

(b) Any wiring system with additional 2.0 mm sheet steel coverage with a maximum unsupported width of 100 mm.

(c) Any WSX2 systems with an additional 1.6 mm sheet steel coverage and unsupported width not exceeding 100 mm.

(d) Galvanized medium tube to AS 1074.

(e) Very heavy-duty conduits complying with AS/NZS 2053 or AS/NZS 61386.

NOTE: Fixings of a type where a threaded metal screw or bolt engages a metal fastener solidly anchored to the building structure may be needed to satisfy a WSX3 classification.

auto login of Electrical Workers Licensing Group is licenced to temporarily download this document.
Electrical Workers Licensing Group may print this document but not more than 10% of the documents subscribed to may be held in printed form at any one time.

Copyright Standards New Zealand

COPYRIGHT

APPENDIX I

PROTECTIVE DEVICE RATINGS AND METRIC EQUIVALENT SIZES FOR IMPERIAL CABLES USED IN ALTERATIONS AND REPAIRS

(Informative)

I1 SCOPE

This Appendix provides guidance to the ratings of circuit-breakers and existing semi-enclosed rewireable fuses or plug-in circuit-breakers that may be used to provide protection against overload in accordance with Clause 2.5.3.2 where alterations, additions or repairs involve the use of existing conductors of an imperial size. It also provides metric equivalent cable sizes for situations where an alteration or repair to an existing circuit involves the connection in parallel of conductors with metric dimensions with conductors of imperial dimensions.

I2 PROTECTIVE DEVICE RATINGS

The ratings provided in Table I1 may be used for electrical installations under the conditions shown.

NOTES:

1 The ratings are based on an ambient temperature of 40°C using a comparison of the cross-sectional area of the imperial conductor to the cross-sectional area of the nearest metric conductor.

2 In accordance with Clause 2.5.2, semi-enclosed rewireable fuses are not to be added for new work.

Copyright Standards New Zealand

auto login of Electrical Workers Licensing Group is licenced to temporarily download this document.
Electrical Workers Licensing Group may print this document but not more than 10% of the documents subscribed to may be held in printed form at any one time.

TABLE I1
PROTECTIVE DEVICE RATINGS

Two-core sheathed cable		V 75 insulation A		V 60 insulation A	
Size	**Installation method**	**CB**	**Fuse or plug-in CB***	**CB**	**Fuse or plug-in CB***
1/.044	Unenclosed	13	10	10	8
	Partially surrounded	10	8	8	6
3/.029	Unenclosed	16	12	13	10
	Partially surrounded	13	8	10	6
3/.036	Unenclosed	20	16	16	10
	Partially surrounded	16	10	10	8
1/.064	Unenclosed	20	16	16	12
	Partially surrounded	16	10	13	8
7/.029	Unenclosed	32	20	25	16
	Partially surrounded	20	16	16	12
7/.036	Unenclosed	40	25	32	20
	Partially surrounded	25	20	20	16
7/.044	Unenclosed	50	32	40	25
	Partially surrounded	32	25	25	20

* Existing semi-enclosed rewireable fuse

auto login of Electrical Workers Licensing Group is licenced to temporarily download this document.
Electrical Workers Licensing Group may print this document but not more than 10% of the documents subscribed to may be held in printed form at any one time.

Copyright Standards New Zealand

A1

I3 METRIC EQUIVALENT SIZES FOR IMPERIAL CONDUCTORS

Where an alteration or repair to an existing circuit involves the connection in parallel of conductors with metric dimensions with existing conductors of imperial dimensions, Table I2 provides metric equivalent sizes.

NOTE: Clause 3.4.3 provides requirements for the connection of cables in parallel.

TABLE I2

SIZES OF IMPERIAL AND METRIC CABLES FOR CONNECTION IN PARALLEL

1	2	3
Imperial size		Metric size
Number and diameter of wires No/inch	Conductor size in^2	Conductor size mm^2
7/.036	0.0071	4
7/.044	0.0100	6
7/.052	0.0145	10
7/.064	0.0225	16
19/.044	0.0300	16
19/.052	0.0400	25
19/.064	0.0600	35
19/.072	0.0750	50
19/.083	0.1000	70
37/.064	0.1200	70
37/.072	0.1500	95
37/.083	0.2000	120
37/.093	0.2500	150
37/.103	0.3000	185
61/.093	0.4000	240
61/.103	0.5000	300
91/.093	0.6000	400
91/.103	0.7500	500
127/.093	0.8500	500
127/.103	1.0000	630

Copyright Standards New Zealand

auto login of Electrical Workers Licensing Group is licenced to temporarily download this document.
Electrical Workers Licensing Group may print this document but not more than 10% of the documents subscribed to may be held in printed form at any one time.

APPENDIX J

SYMBOLS USED IN THIS STANDARD

(Informative)

This Appendix provides guidance on the electrical symbols used in this Standard.

* Figure J1 provides a consolidated summary of all electrical symbols used, and the meaning of each symbol.

Copyright Standards New Zealand

auto login of Electrical Workers Licensing Group is licenced to temporarily download this document.
Electrical Workers Licensing Group may print this document but not more than 10% of the documents subscribed to may be held in printed form at any one time.

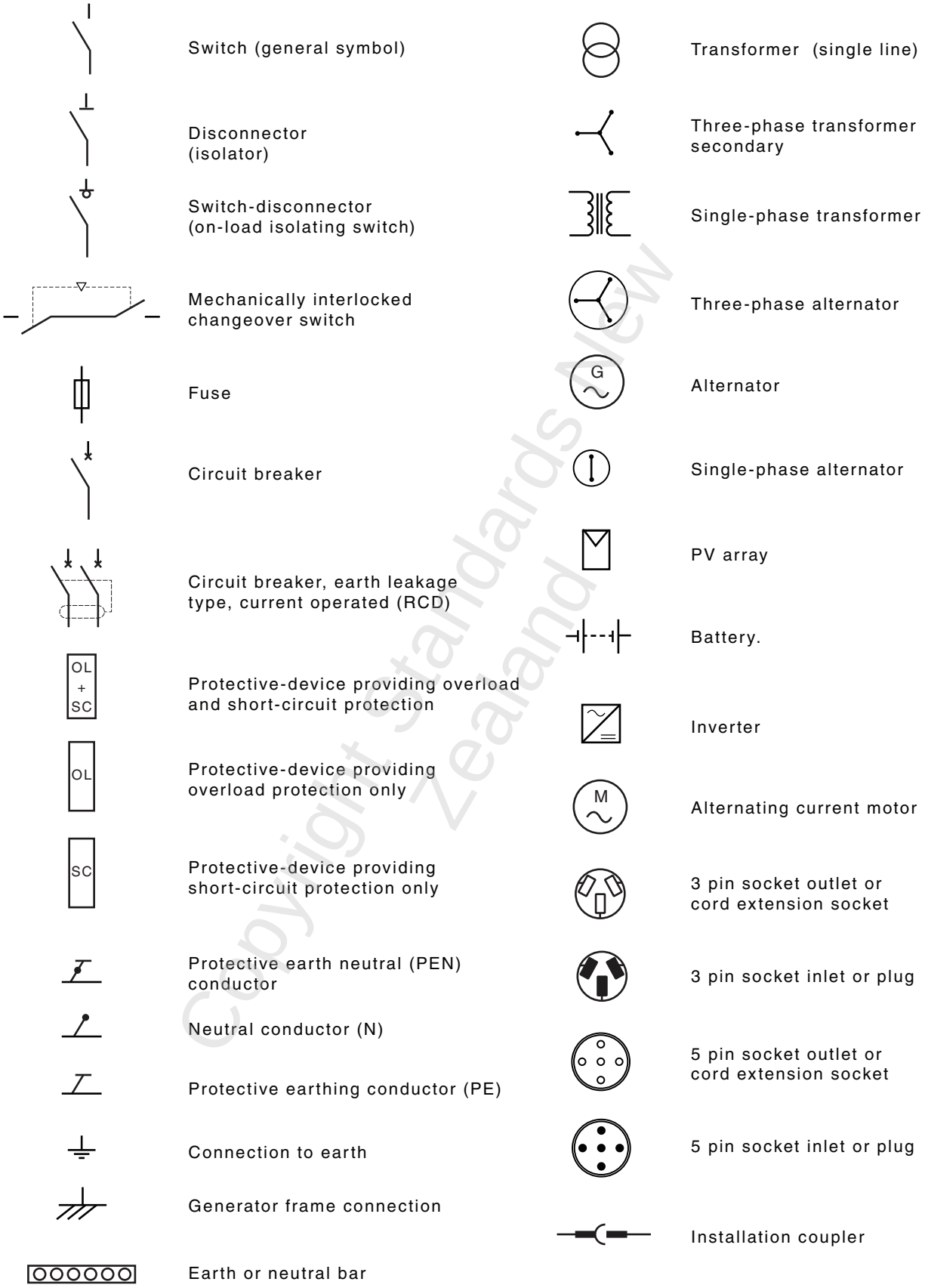

FIGURE J1 SYMBOLS USED IN THIS STANDARD

COPYRIGHT

Copyright Standards New Zealand

auto login of Electrical Workers Licensing Group is licenced to temporarily download this document.
Electrical Workers Licensing Group may print this document but not more than 10% of the documents subscribed to may be held in printed form at any one time.

APPENDIX K

*

SWITCHBOARD REQUIREMENT SUMMARY

(Informative)

TABLE OF CONTENTS

K1 GENERAL
K2 SWITCHBOARD STANDARDS
K3 APPLICATION OF THE AS/NZS 61439 SERIES
K4 GUIDELINES FOR THE ASSESSMENT OF SWITCHBOARDS
K5 CORRESPONDING PROVISIONS OF THIS STANDARD AND THE AS/NZS 61439 SERIES
K6 PARTICULAR CLAUSES RELEVANT TO THIS STANDARD
K7 SHORT-CIRCUIT WITHSTAND STRENGTH
K8 MARKING
K9 OTHER RELEVANT CHARACTERISTICS TO BE DECLARED BY THE ASSEMBLY MANUFACTURER
K10 DEVICE SUBSTITUTION
K11 REPAIRS TO EXISTING SWITCHBOARDS
K12 ROUTINE VERIFICATION BY THE SWITCHBOARD MANUFACTURER

K1 GENERAL

K1.1 Introduction

This Appendix provides information on the requirements for low-voltage switchgear and controlgear assemblies (ASSEMBLIES) from the AS/NZS 61439 series that are relevant to the requirements of this Standard.

K1.2 Deemed to comply

Switchboards constructed to the AS/NZS 61439 series or the AS/NZS 3439 series are deemed to comply with the requirements of Clause 2.10.3, and are therefore deemed to comply with this Standard.

K2 SWITCHBOARD STANDARDS

K2.1 General

Either the AS/NZS 61439 series or the AS/NZS 3439 series may be used under the conditions provided in Paragraphs K2.2 and K2.3.

COPYRIGHT

Copyright Standards New Zealand

auto login of Electrical Workers Licensing Group is licenced to temporarily download this document.
Electrical Workers Licensing Group may print this document but not more than 10% of the documents subscribed to may be held in printed form at any one time.

K2.2 Withdrawal date of the AS/NZS 3439 series

It is intended that the AS/NZS 3439 series will be withdrawn not less than five years from the 2016 publication dates of the AS/NZS 61439 series.

Until that time, the AS/NZS 3439 series and the AS/NZS 61439 series operate in parallel.

K2.3 Testing

Where tests on an ASSEMBLY have been conducted in accordance with IEC 60439, IEC 61439 or the AS/NZS 3439 series, and the test results fulfil the requirements of the relevant part of the AS/NZS 61439 series, further verification of these requirements is not required.

K3 APPLICATION OF THE AS/NZS 61439 SERIES

K3.1 General rules

AS/NZS 61439.1 applies to all parts of the series, except as varied in Part 2 or Part 3 of that series.

A verification of the short-circuit withstand strength is not required for ASSEMBLIES having a rated short-time withstand current or rated conditional short-circuit current not exceeding 10 kA r.m.s or 17 kA peak. Tests for other characteristics such as current rating apply to all switchboards.

K3.2 Power switchgear and controlgear (PSC)

AS/NZS 61439.2 applies to industrial, commercial and similar applications where operation by ordinary persons is not intended.

NOTE: An ordinary person is a person who is neither a skilled person nor an instructed person.

K3.3 Distribution boards intended to be operated by ordinary persons (DBO)

AS/NZS 61439.3 applies to ASSEMBLIES with rated currents (I_{nA}) not exceeding 250 A, and rated currents of a circuit (I_{nc}) not exceeding 125 A. This includes—

(a) type A, DBO designed to accept single-pole devices; and

(b) type B, DBO designed to accept multi-pole and/or single-pole devices.

K4 GUIDELINES FOR THE ASSESSMENT OF SWITCHBOARDS

K4.1 User template

For a user information template, refer to AS/NZS 61439.1:2016, Annex C.

K4.2 Items subject to agreement

For items subject to agreement, refer to AS/NZS 61439.2:2016, Appendix BB and AS/NZS 61439.3:2016, Annex AA.

COPYRIGHT

Copyright Standards New Zealand

auto login of Electrical Workers Licensing Group is licenced to temporarily download this document.
Electrical Workers Licensing Group may print this document but not more than 10% of the documents subscribed to may be held in printed form at any one time.

K4.3 Design verification

For a list of design verifications to be performed, refer to AS/NZS 61439.1:2016, Annex D. This list shows characteristics to be verified with associated clause numbers. The verification options for compliance are—

(a) testing;

(b) comparison with a tested reference design; and

(c) verification assessment, i.e. confirmation of the correct application of calculations and design rules, including use of appropriate safety margins.

NOTE: One or more options may be used.

K5 CORRESPONDING PROVISIONS OF THIS STANDARD AND THE AS/NZS 61439 SERIES

Table K1 below provides a list of provisions of this Standard and corresponding provisions in the AS/NZS 61439 series.

auto login of Electrical Workers Licensing Group is licenced to temporarily download this document.
Electrical Workers Licensing Group may print this document but not more than 10% of the documents subscribed to may be held in printed form at any one time.

Copyright Standards New Zealand

TABLE K1

CORRESPONDING PROVISIONS BETWEEN AS/NZS 3000 AND THE AS/NZS 61439 SERIES

AS/NZS 3000		AS/NZS 61439 series (2016)		
Clause/ Appendix	**Clause details**	**Part No.**	**Clause/ Annex**	**Clause details**
2.10.3	Construction	1	8	Constructional requirements
1.5.4	Basic protection against electric shock	1	8.4	Protection against electric shock
7.2	Safety services (segregation elements)	1	8.4.2	Basic protection
		2	8.101, 8.102	Internal separation
2.5.5	Protection against switchboard internal arcing fault currents	1	ZC	Guidelines for ASSEMBLIES intended to provide increased security against the occurrence or the effects of internal arcing faults
		2	8.101, 8.102	Internal separation
1.6	Design of an electrical installation	1	5	Interface characteristics
1.5.9	Protection against overcurrent	1	5.3	Current ratings
				I_{nA} (ASSEMBLY)
1.6.3	Maximum demand			I_{nc} (maximum of a circuit)
C	Circuit arrangements		5.4	Rated diversity factor that applies to a circuit rating when multiple circuits are carrying current
1.7.2(f)	Identification of conductors	1	8.6.5	Main and auxiliary circuits, identification of conductors
3.8	Identification		8.6.6	PE and N

K6 PARTICULAR CLAUSES RELEVANT TO THIS STANDARD

K6.1 Degree of protection of ASSEMBLIES

Clause 8.2 of AS/NZS 61439.1:2016 may satisfy or exceed Clause 1.5.4.4 of this Standard. For example, a PSC has a minimum of IP2X and a DBO for indoor use has a minimum of IP2XC.

K6.2 Form of internal separation

Clauses 8.101, 8.102 and Tables 104 and 104.101 (see Table K2 below) of AS/NZS 61439.2:2016 will meet the requirements of Clause 2.5.5 of this Standard for switchboards rated greater than or equal to 800 A.

auto login of Electrical Workers Licensing Group is licenced to temporarily download this document.
Electrical Workers Licensing Group may print this document but not more than 10% of the documents subscribed to may be held in printed form at any one time.

Copyright Standards New Zealand

That is, a form of separation of form 3b, 4a and 4b (including forms with suffixes i, h and ih) will satisfy the requirement of Clause 2.5.5.2 of this Standard.

NOTE: The form of separation is recommended to be marked or declared. Refer to Paragraph K8.

auto login of Electrical Workers Licensing Group is licenced to temporarily download this document.
Electrical Workers Licensing Group may print this document but not more than 10% of the documents subscribed to may be held in printed form at any one time.

Copyright Standards New Zealand

TABLE K2

[Source: Table 104.101 of AS/NZS 61439.2:2016]
MINIMUM REQUIREMENTS FOR INTERNAL SEPARATION

Form	1	2	3	4	5	6	7	8
	Separation of	Separation of terminals for external conductors				Separation of external conductors		
	Busbars from all functional units	All functional units from one another	From the busbars	From the functional units	From the terminals of other functional units	From the busbars	From the functional units	From the terminals of other functional units
Form 1	Not separated							
Form 2a	Separated		Not separated					
Form 2b	Separated		Separated					
Form 3a	Separated	Separated	Not separated	Separated	Not separated		Separated	Not separated
Form 3b	Separated	Separated	Separated	Separated	Not separated	Separated	Separated	Not separated
Form 4a	Separated	Separated	Separated	In the same compartment (Note 1)	Separated (Note 2)	Separated		Separated (Notes 2, 3)
Form 4b	Separated	Separated	Separated	Not in the same compartment (Notes 1, 4)	Separated (Note 3)	Separated		Separated (Notes 2, 3)

NOTES:

1 Includes ‘Associated with a functional unit’.

2 Includes ‘any other functional unit’.

3 Form 4a and 4b—External conductors need not be separated from each other.

4 Form 4b—Terminals for external conductors not in the same compartment as the functional unit, but in individual, separate, enclosed protected spaces or compartments.

COPYRIGHT

Copyright Standards New Zealand

auto login of Electrical Workers Licensing Group is licenced to temporarily download this document.
Electrical Workers Licensing Group may print this document but not more than 10% of the documents subscribed to may be held in printed form at any one time.

K6.3 Clearance

Verification to Clause 10.4 and Table 1 or by HV tests to Clause 10.9.3 and Table 10 of AS/NZS 61439.1:2016 may meet the clearance requirements of this Standard.

K6.4 Overvoltage category

Annex G of AS/NZS 61439.1:2016 provides the overvoltage category for various U_{imp} categories related to various supply systems that may meet the requirements of this Standard.

For example, using AS/NZS 61439.1:

(a) Origin of installation—Overvoltage Category IV.

U_{imp} 6 kV—5.5 mm clearance or pass 5.1 kV r.m.s.

(b) Distribution circuit level—Overvoltage Category III.

U_{imp} 4 kV—3 mm clearance or pass 3.4 kV r.m.s.

K6.5 Creepage

Verification to Clause 10.4 and Table 2 of AS/NZS 61439.1:2016 may meet the requirements of this Standard.

For example, using AS/NZS 61439.1 insulation voltage U_i 440 V, Pollution 3, Material Group III, creepage 6.3 mm.

K6.6 Earthing (protective earth circuit)

Clause 10.5 of AS/NZS 61439.1:2016 provides test requirements that may meet the requirements of this Standard.

K6.7 Dielectric tests for protection against electric shock

Clauses 10.5, 10.9.2 and Table 8 of AS/NZS 61439.1:2016 provide power frequency tests related to insulation voltage and may meet the requirements of this Standard. For example, U_i 440 V, dielectric test voltage 1.89 kV.

K6.8 Current rating by testing and temperature limits

Clause 10.10 and Table 6 of AS/NZS 61439.1:2016 provide current-carrying capacity requirements that are to be satisfied by rated current of the switchboard ASSEMBLY (I_{nA}), rated current of outgoing circuits (I_{nc}), and maximum demand after diversity factor (RDF). These requirements may meet the requirements of this Standard.

This test from AS/NZS 61439.1 establishes the following:

(a) That I_{nA} is the rated current of the ASSEMBLY and the current that the busbar is capable of distributing, for example, I_{nA} = 1600 A.

(b) That I_{nc} is the maximum rated current of an individual circuit, for example, I_{nc} = 534 A for a MCCB marked I_n 630 A.

COPYRIGHT

Copyright Standards New Zealand

auto login of Electrical Workers Licensing Group is licenced to temporarily download this document.
Electrical Workers Licensing Group may print this document but not more than 10% of the documents subscribed to may be held in printed form at any one time.

NOTE: The I_n marked rating, that is tested to AS/NZS 60947.2 in free air, may differ (need derating) to achieve I_{nc}. That is, I_{nc} of 534 A is equal to 0.85 multiplied by I_n of 630 A.

(c) That RDF (rated diversity factor), for example—

$I = 0.9 \times I_{nc}$

$= 0.9 \times 534$

$= 481$ A per circuit

where

RDF= 0.9 for three outgoing circuits.

Thus, the total current after diversity for the three circuits = $3 \times 481 = 1443$ A.

Another example—

$I = I_{nc} = 481$ per circuit; and

RDF = 1 for three outgoing circuits

Thus, the total current after diversity for the three circuits = $3 \times 481 = 1443$ A.

NOTES:

1 RDF is the per unit value of the rated current, assigned by the ASSEMBLY manufacturer, to which outgoing circuits of an ASSEMBLY can be continuously and simultaneously loaded, taking into account the mutual thermal influences.

2 RDF should be equal to or higher than the value of assumed loading factor from Table 101 of AS/NZS 61439.2:2016 and AS/NZS 61439.3:2016.

For example, an assumed loading factor for three circuits, $I_n = 0.9$, Table 101 of AS/NZS 61439.2:2016 and $I_n = 0.8$ Table 101 of AS/NZS 61439.3.

For guidance and examples, refer to AS/NZS 61439.1:2016, Annex E, Paragraph E2.

3 The assumed loading factor from Table 101 of AS/NZS 61439.2:2016 and after diversity maximum demand from Appendix C, Paragraph C2 of this Standard are the same in principle.

(d) The derating influences for current ratings for I_{nA}, I_{nc} and RDF.

I_n is the marked current rating on a device tested in free air. The air temperature rise inside the switchboard is higher than the outside ambient temperature and depends on the heating from equipment, such as busbars, circuit-breakers and fuses. Tests for I_{nc} and RDF are with the ASSEMBLY carrying I_{nA}. The ventilation and the IP rating affect the inside air temperature rise. The minimum IP rating for a PSC ASSEMBLY is IP2X and for a DBO is IP2XC. For example, a rating of IP5X will need to be derated if the original test was at IP2X. Refer to

COPYRIGHT

Copyright Standards New Zealand

Electrical Workers Licensing Group auto login of Electrical Workers Licensing Group is licenced to temporarily download this document. Electrical Workers Licensing Group may print this document but not more than 10% of the documents subscribed to may be held in printed form at any one time.

AS/NZS 61439.1:2016, Clauses 10.10.3, 10.10.4, Annex O and AS 60890 for further details of derating influences.

The reference air ambient temperature for I_n value to AS/NZS 60947, and switchboards constructed to AS/NZS 61439 (I_{nA}) and I_{nc} is 35°C averaged over 24 h with a maximum of 40°C.

The derating factors for circuit-breakers and fuses for various temperatures is available from the manufacturer.

(e) An explanation of terminal temperature and cable-rated temperature. The allowable limit for terminals for outgoing insulated conductors is 70 K (Table 6 of AS/NZS 61439.1:2016) at the reference ambient temperature of 35°C giving 105°C on the terminal.

V75 cables may be connected to these terminals on the basis that if cables are separated at the terminal and for a deemed distance of 100 mm, then it is at this point that insulation is required. The temperature of the insulation at this point is deemed not to exceed the allowed insulation temperature rating of 75°C.

K6.9 Derivation of ratings for similar variants to AS/NZS 61439.1

Clause 10.10.3 of AS/NZS 61439.1:2016 shows how the rated currents of variants may be verified by derivation for similar arrangements that have been verified by test.

K6.10 Verification assessment to AS/NZS 61439.1

Clause 10.10.4 of AS/NZS 61439.1:2016 provides information on the calculation procedure and limitations.

Annex N of AS/NZS 61439.1:2016 and AS 60890 provide operating current and power loss of copper conductors.

For verification by calculation, the copper busbar design temperature should not exceed 90°C unless based on a tested reference design.

Verification by test may give higher ratings than verification assessment for the same busbar size.

K7 SHORT-CIRCUIT WITHSTAND STRENGTH

K7.1 General

In Clause 10.11.2 of AS/NZS 61439.1:2016, ASSEMBLIES for installation with prospective currents (I_{cp}) exceeding 10 kA r.m.s or if protected by devices with a cut-off peak current (I_{pk}) exceeding 17 kA need to be tested.

K7.2 Ratings

K7.2.1 *Short time withstand current rating (I_{cw})*

The following is an example for rating of short time withstand current:

I_{cw} = 25 kA for 0.1 s with I peak of 52.5 kA.

COPYRIGHT

auto login of Electrical Workers Licensing Group is licenced to temporarily download this document.
Electrical Workers Licensing Group may print this document but not more than 10% of the documents subscribed to may be held in printed form at any one time.

K7.2.2 *Backup (cascading)*

Clause 2.5.4.2, Item (a), and Clause 2.5.7.2.1 of this Standard provide information on backup (cascading).

For further guidance, consult manufacturers' tables for values to determine if a device with a short-circuit rating less than the prospective short-circuit current and protected by an upstream device, rated for the prospective short-circuit current, that, in association with a downsteam device, limits I_{pk} and I^2t to a value that can be used to comply with Item (a) of Clause 2.5.4.2 of this Standard.

K7.3 Short-circuit withstand strength by comparison to a reference design utilizing a check list

See AS/NZS 61439.1:2016, Clause 10.11.3 and Table 13 (including Australian/New Zealand variations in Appendix ZA), for relevant details.

Explanation of short-circuit withstand strength by comparison to a reference design using a check list, is best demonstrated through an example. Thus, an ASSEMBLY of modular pretested items such as busbars, busbar supports and connections, incoming and outgoing units, and the like that have already been proven by test as modules under the conditions required for the switchboard to comply with Clause 10.11.3 are suitable if Table 13 of AS/NZS 61439.1:2016 requirements are satisfied.

K8 MARKING

K8.1 PSC and DBO switchboards

The marking for PSC and DBO switchboards is found in Clause 6.1 of the AS/NZS 61439 series. Those markings that apply are—

(a) ASSEMBLY manufacturer's name or trademark;

(b) type designation or identification, or other means of identification;

(c) date of manufacture; and

(d) AS/NZS 61439.X (X = 1, 2 or 3).

The recommended additional marking for PSC switchboards is form of separation, for example, form 3b, and the applicable IP rating, for example, IP2X or IPXXB.

K8.2 Additional marking for DBO

The following additional marking provisions for a DBO are found in Clause 6.1 of AS/NZS 61439.3:2016:

(a) I_{nA}, for example, I_{nA} 250 A.

(b) IP, when greater than IP2XC, for example, IP4X.

In addition, AS/NZS 5112 provides requirements for marking of the neutral.

COPYRIGHT

Copyright Standards New Zealand

auto login of Electrical Workers Licensing Group is licenced to temporarily download this document.
Electrical Workers Licensing Group may print this document but not more than 10% of the documents subscribed to may be held in printed form at any one time.

K9 OTHER RELEVANT CHARACTERISTICS TO BE DECLARED BY THE ASSEMBLY MANUFACTURER

The following characteristics apply to PSC and DBO (for a full listing, see Clause 5 of AS/NZS 61439.1:2016):

(a) U_e is the rated operational voltage, for example, 240/415 V.

(b) I_{nA} is the rated current of the ASSEMBLY, for example, 1600 A.

(c) I_{nc} is the rated current of a circuit, for example, I_{nc} of 534 A for a device marked I_n 630 A.

(d) RDF is the rated diversity factor, for example, RDF 0.9 × three circuits.

NOTE: In the absence of an agreement, the values of assumed loading of the outgoing circuits may be based on Table 101 of AS/NZS 61439.1:2016.

(e) I_{cw} is the rated short time withstand current, for example, 25 kA for 0.1 s.

Additional items to be declared for distribution boards tested to AS/NZS 61439.3:2016 as per Clause 5.6 are—

(i) type A or type B DBO;

(ii) rated current of loose busbars (bus combs), for example, 80 A;

(iii) maximum size of the overcurrent protection (that is needed as a DBO may not be supplied with a protective device or main switch); and

(iv) rated current of the neutral supplied with the ASSEMBLY, for example, 125 A.

The standard neutral rating, as supplied, is as follows. The required rating of the neutral may differ in service depending on the phase load balance and diversity. Refer to Clause 3.4, Appendix C and relevant service rules:

(A) 100% × I_{nA} for a DBO type A, that is for single-pole devices only.

(B) 50% × I_{nA} for a DBO type B, that is for multi-pole and single-pole devices.

K10 DEVICE SUBSTITUTION

K10.1 General

The following provisions are from Clause 10.10.3.5 and Table 13 of AS/NZS 61439.1:2016:

A device may be substituted with a similar device to that used in the original verification, provided that—

(a) if the device is not from the same manufacturer, the device rating does not exceed 3150A;

(b) the power loss and terminal temperature rise of the device are the same or lower when tested in accordance with the relevant product standard; and

COPYRIGHT

Copyright Standards New Zealand

Electrical Workers Licensing Group is licenced to temporarily download this document.
auto login of Electrical Workers Licensing Group may print this document but not more than 10% of the documents subscribed to may be held in printed form at any one time.

(c) the physical arrangement within the functional unit and the rating of the functional unit are maintained or bettered with respect to thermal considerations.

NOTE The physical arrangements include terminal shields, conductor type, material and connection sizes, mounting orientation, clearances to other parts, ventilation arrangements and terminal arrangement.

K10.2 Device substitution questions

Are the short-circuit protective devices of each circuit of the ASSEMBLY to be assessed equivalent, that is of the same make and series with the same or better limitation characteristics (I_2t, I_pk) based on the device manufacturer's data, and with the same arrangement as the reference design?'

Does the short-circuit protective devices of each circuit of the ASSEMBLY to be assessed—

(a) have a breaking capacity not less than the short-circuit rating of the ASSEMBLY at the rated operational voltage of the ASSEMBLY?

(b) in case of a current-limiting protective device—have a peak let-through current and let-through energy at the short-circuit rating and the rated operational voltage of the ASSEMBLY equal to or smaller than the reference design?

(c) in case of a non-current-limiting device—have a rated short-time withstand current (I_{cw}) equal to or higher than the reference design?

(d) fulfil the requirements of co-ordination with upstream and downstream devices (see 9.3.4)?

(e) have equal or smaller critical distances (safety perimeter) to the reference design?

(f) maintain identical mechanical orientation, including the direction and position of venting of the arc chutes?

NOTE Short-circuit protective devices of the same manufacturer but of a different series, or devices from a different manufacturer, may be considered equivalent and be substituted for the original device if the requirements of the device manufacturer are complied with and the device manufacturer declares the performance characteristics to be the same or better in all relevant respects to the series used for verification, for example, breaking capacity limitation characteristics (I^2t, I_{pk}) and the critical distances (safety perimeters).'

K11 REPAIRS TO EXISTING SWITCHBOARDS

Where repairs are needed to an existing switchboard and the original devices are no longer available, and equivalent devices suitable for the installation conditions are fitted, then the requirements for repairs in this Standard apply.

In doing this, the principles of device substitution may be taken into account as per Paragraph K10.

COPYRIGHT

Copyright Standards New Zealand

auto login of Electrical Workers Licensing Group is licenced to temporarily download this document.
Electrical Workers Licensing Group may print this document but not more than 10% of the documents subscribed to may be held in printed form at any one time.

K12 ROUTINE VERIFICATION BY THE SWITCHBOARD MANUFACTURER

Routine verification is intended to detect faults in materials and workmanship and to ascertain proper functioning of the manufactured ASSEMBLY. It is made on every ASSEMBLY during and/or after manufacture.

Where appropriate, routine verification confirms that design verification is available.

Routine verification does not need to be carried out on devices and self-contained components incorporated in the ASSEMBLY when they comply with the relevant standards, and have been selected in accordance with Clause 8.5.3 of this Standard, and are installed in accordance with the instructions of the device manufacturer.

Verification comprises the following categories that are taken from Clauses 11.2 to 11.8 of AS/NZS 61439.1:2016:

(a) Degree of protection of enclosures.

(b) Clearances and creepage distances.

(c) Protection against electric shock and integrity of protective circuits.

(d) Incorporation of built-in components.

(e) Internal electrical circuits and connections.

(f) Terminals for external conductors.

(g) Mechanical operation.

(h) Performance (see Clauses 11.9 and 11.10 of AS/NZS 61439.1:2016).

(i) Dielectric properties, wiring, operational performance and function.

auto login of Electrical Workers Licensing Group is licenced to temporarily download this document.
Electrical Workers Licensing Group may print this document but not more than 10% of the documents subscribed to may be held in printed form at any one time.

Copyright Standards New Zealand

APPENDIX L

(Deleted)

This page is left blank intentionally.

auto login of Electrical Workers Licensing Group is licenced to temporarily download this document.
Electrical Workers Licensing Group may print this document but not more than 10% of the documents subscribed to may be held in printed form at any one time.

Copyright Standards New Zealand

auto login of Electrical Workers Licensing Group is licenced to temporarily download this document.
Electrical Workers Licensing Group may print this document but not more than 10% of the documents subscribed to may be held in printed form at any one time.

*

APPENDIX M

REDUCING THE IMPACT OF POWER SUPPLY OUTAGES—CONTINUITY OF SUPPLY FOR ACTIVE ASSISTED LIVING AND HOMECARE MEDICAL SITUATIONS

(Informative)

M1 GENERAL

M1.1 Scope

This Appendix provides guidance on the mitigation of foreseeable adverse effects that disruption to power supply may cause in active assisted living and homecare medical situations.

Where the owner or operator of an installation or part of an installation has identified it beneficial for the installation or part thereof to include features to reduce the impact of power supply outages and to provide continuity of supply for active assisted living and homecare medical situations, this Appendix gives guidance so that the electrical installation will function correctly for the purpose intended, and take into account the mitigation of foreseeable adverse effects that disruption to power supply may cause.

M1.2 Active assisted living

Active assisted living (AAL) systems and services enable independent living through the use of information and communications technology (ICT) by ensuring usability, accessibility, interoperability, security and safety for all users. Household automation plays a large part in this.

M1.3 Homecare medical

Home-based medical procedures such as dialysis, respiratory support and cardiac care are becoming commonplace. Allied to this is the growing use of tele-monitoring, which is the remote collection and transmission of data so that it can be interpreted and used for ongoing patient management.

M2 ARRANGEMENTS

The following steps are provided to supplement the requirements of this Standard for active assisted living and homecare medical applications:

(a) Enrol the electrical installation for the priority restoration in the event of supply failure with the electricity retailer and/or electricity distributor providing the power supply to the electrical installation.

(b) Ensure that all trees have sufficient clearance from the aerial conductors to prevent damage to, or the interruption of the electrical supply, if the supply to the electrical installation is by aerial

COPYRIGHT

conductors. Further inspections should be carried out at appropriate intervals and corrective action taken, if required.

(c) Provide full discrimination throughout the electrical installation (see Clause 2.5.7).

(d) Ensure that the capacity of the consumer mains, switchboards and final subcircuit wiring is able to supply the expected maximum loading of the electrical installation.

(e) Use miniature circuit breakers (MCBs) or residual current breaker with overload (RCBO) for overcurrent protection in domestic installations, as they require no additional parts to carry out repair. A MCB or RCBO is able to be reset easily without live terminals being exposed. They also give a visual indication that they have tripped, making identification and restoration a simple process.

(f) Use a portable Type 1, 10 mA RCD for each item of medical equipment in home care areas of a domestic electrical installation. These RCDs enable the use of another operating socket-outlet to maintain supply in the event of a switchboard mounted MCB or RCD tripping;

(g) Ensure constant charging of the batteries to maintain full charge for power supply equipment fitted with batteries as energy storage. Regular maintenance of the batteries should be carried out to the battery manufacturers' instructions.

NOTE: The maintenance of batteries fitted to medical equipment to provide continued operation in the event of power supply failure is considered to be part of the medical equipment maintenance arrangements.

(h) Provide for an easy connection of a portable generating set (located outside due to the generating set exhaust gases and combustion and cooling air requirements) by use of an extension cord, dedicated socket-outlet wiring in the electrical installation or changeover switch for the connection to the electrical installation. These are typical methods that can be used to cover extended period of supply failure.

NOTES:

1 A grid connected inverter is not able to use the output from a PV array when the normal mains supply to the electrical installation has failed.

2 An inverter or UPS powered from a large battery may be able to provide an alternative power supply cover for a short term supply failure.

(i) Put in place arrangements to cater for medical evacuation to a suitable site which is able to provide a long term alternative power supply.

auto login of Electrical Workers Licensing Group is licenced to temporarily download this document.
Electrical Workers Licensing Group may print this document but not more than 10% of the documents subscribed to may be held in printed form at any one time.

Copyright Standards New Zealand

auto login of Electrical Workers Licensing Group is licenced to temporarily download this document.
Electrical Workers Licensing Group may print this document but not more than 10% of the documents subscribed to may be held in printed form at any one time.

*

APPENDIX N

ELECTRICAL CONDUITS

(Informative)

N1 GENERAL

There are two series of Standards for electrical conduits that run in parallel within Australia and New Zealand.

The first is the AS/NZS 2053 series and the second is the AS/NZS 61386 series, which is based on but not equivalent to the IEC 61386 series.

The relevant Standards are as follows:

AS/NZS		
2053	Conduits and fittings for electrical installations	
2053.1	Part 1:	General requirements
2053.2	Part 2:	Rigid plain conduits and fittings of insulating material
2053.4	Part 4:	Flexible plain conduits and fittings of insulating material
2053.5	Part 5:	Corrugated conduits and fittings of insulating material
2053.6	Part 6:	Profile wall, smooth bore conduits and fittings of insulating material
61386	Conduit systems for cable management	
61386.1	Part 1:	General requirements
61386.21	Part 21:	Particular requirements—Rigid conduit systems
61386.22	Part 22:	Particular requirements—Pliable conduit systems
61386.23	Part 23:	Particular requirements—Flexible conduit systems

N2 MARKING OF AS/NZS 2053 SERIES AND AS/NZS 61386 SERIES CONDUITS

The following marking applies:

(a) All conduits marked with the manufacturer’s name or trade mark.

(b) All conduits marked with the nominal size.

(c) All conduits marked with the word ‘electrical’.

(d) Both series allow the marking of the duty rating—VLD, LD, MD, HD, VHD.

(e) AS/NZS 61386 series conduits may be marked with four numbers, as a minimum, to identify the classifications applicable. (Resistance to compression, resistance to impact, lower temperature range, upper temperature range. See Tables N1 and N2.)

COPYRIGHT

(f) All conduits marked with ‘HF’ (‘Halogen-free’ acceptable) or ‘LAG’ (Low acid gas emission).

(g) All conduits marked with the letter ‘T’ indicating protection against solar radiation.

(h) Both series allow the marking of the lower and upper temperature ratings.

(i) Both series require conduit to be marked with the relevant series number.

N3 CLASSIFICATIONS

The AS/NZS 61386 series gives the option of using the first four numerals in the classification, as a minimum, to mark conduits and fittings. Usually, however, the duty rating is marked, e.g. VHD, in lieu of the classification numbers.

Copyright Standards New Zealand

auto login of Electrical Workers Licensing Group is licenced to temporarily download this document.
Electrical Workers Licensing Group may print this document but not more than 10% of the documents subscribed to may be held in printed form at any one time.

TABLE N1

FIRST AND SECOND NUMERALS IN COMPARISON WITH DUTY RATINGS IN AS/NZS 2053 SERIES AND AS/NZS 61386 SERIES

Classification as accepted in market and by both series	AS/NZS 2053 Resistance to compression	Test criteria N	AS/NZS 61386 Resistance to compression	Test criteria N	AS/NZS 2053 Resistance to impact	Test criteria kg	AS/NZS 61386 Resistance to impact	Test criteria kg
	First numeral in comparison with duty rating				**Second numeral** in comparison with duty rating			
Very light duty (VLD)	VLD	125	1	125	VLD	(0.5 at 100 mm drop)	1	(0.5 at 100 mm drop)
Light duty (LD)	LD	320	2	320	LD	(1.0 at 100 mm drop)	2	(1.0 at 100 mm drop)
Medium duty (MD)	MD	750	3	750	MD	(2.0 at 100 mm drop)	3	(2.0 at 100 mm drop)
Heavy duty (HD)	HD	1250	4	1250	HD	(2.0 at 300 mm drop)	4	(2.0 at 300 mm drop)
Very heavy duty (VHD)	VHD	4000	5	4000	VHD	(6.8 at 300 mm drop)	5	(6.8 at 300 mm drop)

COPYRIGHT

Copyright Standards Australia

auto login of Electrical Workers Licensing Group is licenced to temporarily download this document.
Electrical Workers Licensing Group may print this document but not more than 10% of the documents subscribed to may be held in printed form at any one time.

TABLE N2

THIRD AND FOURTH NUMERALS FOR TEMPERATURE RATINGS COMPARISON BETWEEN AS/NZS 2053 SERIES AND AS/NZS 61386 SERIES

Third numeral			Fourth numeral		
AS/NZS 61386 Lower temp. range		AS/NZS 2053 Lower temp. range	AS/NZS 61386 Upper temp. range		AS/NZS 2053 Upper temp. range
1	+5°C	As declared	1	+60°C	As declared
2	–5°C	As declared	2	+90°C	As declared
3	–15°C	As declared	3	+105°C	As declared
4	–25°C	As declared	4	+120°C	As declared
5	–45°C	As declared	5	+150°C	As declared
			6	+250°C	As declared
			7	+400°C	As declared
No duty rating assigned in the AS/NZS 2053 series or AS/NZS 61386 series					

NOTE TO TABLES N1 AND N2: Both conduit series carry the relevant tests and are similar in that regard. Conduits to either of the relevant series are eligible for sale and use within Australia and New Zealand.

Copyright Standards New Zealand

auto login of Electrical Workers Licensing Group is licenced to temporarily download this document.
Electrical Workers Licensing Group may print this document but not more than 10% of the documents subscribed to may be held in printed form at any one time.

APPENDIX O

INSTALLATION OF ARC FAULT DETECTION DEVICES (AFDDs)

(Informative)

auto login of Electrical Workers Licensing Group is licenced to temporarily download this document.
Electrical Workers Licensing Group may print this document but not more than 10% of the documents subscribed to may be held in printed form at any one time.

O1 GENERAL

Where the owner or operator of an installation or part of an installation has identified it beneficial for the installation or part thereof to include features to reduce the risk of igniting an electrical fire, this Appendix provides guidance on the selection and installation of AFDDs to mitigate the risk of igniting an electrical fire in final subcircuits downstream of the arc fault detection device (AFDD).

Fire ignition by arc faults is normally a result of one or more of the following:

(a) Insulation defects between live conductors leading to fault currents (parallel arcs).

(b) Broken or damaged (reduced cross-section) conductors under load current conditions (series arcs).

(c) Terminal connections with high resistance.

Arc fault detection devices installed in final subcircuits are capable of detecting fault conditions that result from damaged cables within the installation wiring or damaged flexible cords of electrical equipment plugged into socket-outlets within the installation.

NOTE: There are also other types of arcing fault devices used to mitigate the risk of igniting an electrical fire and or causing an electrical explosion in high-current circuits, high-current LV switchboards and HV switchboards, and it should be noted these are not the AFDDs described in this Appendix.

There are two types of arc faults:

(i) *Series arcing faults* An electrical arc within a single active or neutral conductor, in series with the connected load (see Figure O1).

(ii) *Parallel arcing faults* An electrical arc between an active and a neutral conductor, or between two active conductors of different phases, or between a live conductor and the protective conductor, in parallel with the connected load (see Figure O1).

COPYRIGHT

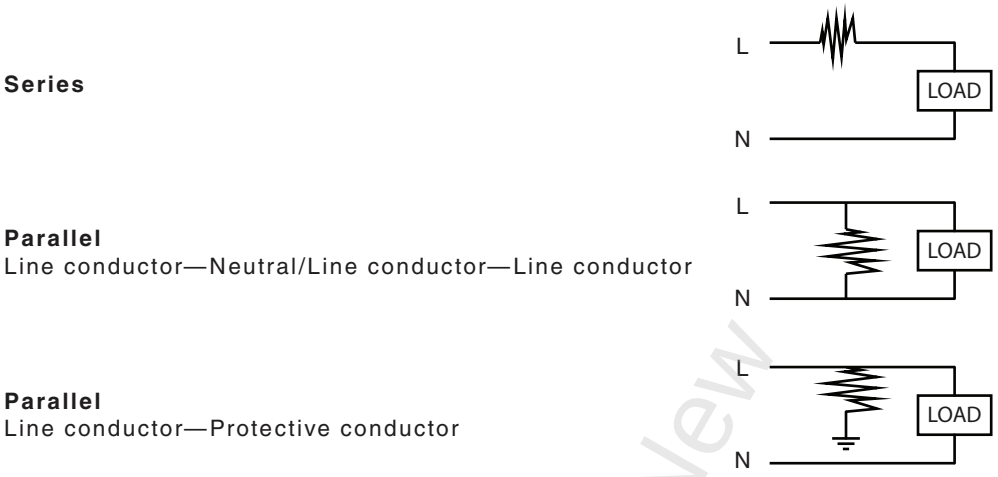

FIGURE O1 TYPES OF ARC FAULT

Miniature overcurrent circuit breakers (MCBs), fuses, and residual current devices (RCDs) are not capable of reliably protecting against the effects of arcing due to the nature of the arcing current (including its magnitude, frequency spectrum, mode of arc, and sporadic occurrence), and their response times at the level of current associated with electrical arcing.

AFDDs that do not incorporate integral overcurrent or residual current protection do not provide protection against sustained thermal overloads, short-circuit currents, or residual currents at power frequency.

NOTE: Installations in which the use of AFDDs may be appropriate include the following:

(a) Premises with sleeping accommodation.

(b) Premises and locations for children, handicapped or elderly people, e.g. day care centres, pre-schools, other schools, retirement or nursing homes.

(c) Premises for gathering of people, e.g. theatres, cinemas, concert halls, universities, event locations, restaurants, bars, exhibitions, underground stations, hospitals commercial centres, shopping malls, office complexes, etc.

(d) Locations with risks of fire due to the nature of processed or stored materials, i.e. locations, such as barns, wood-working shops, stores of combustible materials.

(e) Locations constructed with combustible materials, e.g. wooden buildings.

(f) Fire propagating structures.

(g) Locations where irreplaceable goods are stored or displayed and may be endangered, e.g. museums, galleries, etc.

O2 CHARACTERISTICS OF AFDDs

Refer to IEC 62606.

COPYRIGHT

Copyright Standards New Zealand

auto login of Electrical Workers Licensing Group is licenced to temporarily download this document.
Electrical Workers Licensing Group may print this document but not more than 10% of the documents subscribed to may be held in printed form at any one time.

O3 GENERAL REQUIREMENTS FOR AFDDs

Refer to IEC 62606.

O4 LOCATION, SELECTION AND INSTALLATION OF AFDDs

O4.1 Location

Where used, an AFDD should be located at the origin of the circuit to be protected. The use of AFDDs does not obviate the requirement to apply one or more of the measures provided in other clauses of this Standard.

O4.2 Selection of AFDDs

Where used, an AFDD should be selected to suit the nominal voltage, frequency, current and short-circuit current to which it may be subjected. Selection of AFDDs which comply with IEC 62606 will satisfy this recommendation.

O4.3 Installation

The requirements of this Standard apply to the installation of AFDDs.

Where used, AFDDs should be installed as follows:

(a) After the main switch.

(b) At the origin of the circuit to be protected as follows:

  (i) Where the AFDD does not include integral short-circuit protection or residual current protection, it is to be installed in series with a device or devices complying with one of the following Standards:

    (A) AS/NZS 60898 series.

    (B) AS/NZS 3111.

    (C) AS/NZS 61009.1.

    (D) AS/NZS 3190 or the IEC 60269 series.

  (ii) The short-circuit making and breaking capacity of the AFDD is not to be less than the prospective short-circuit current at the point of installation.

(c) To protect the circuits most at risk, such as final subcircuit supplying socket-outlets.

O4.4 Overvoltage protection

As AFDDs incorporate sensitive electronic components (e.g. microcontrollers), consideration should be given to the provision of overvoltage protection. See Appendix F.

auto login of Electrical Workers Licensing Group is licenced to temporarily download this document.
Electrical Workers Licensing Group may print this document but not more than 10% of the documents subscribed to may be held in printed form at any one time.

Copyright Standards New Zealand

APPENDIX P

* GUIDANCE FOR INSTALLATION AND LOCATION OF ELECTRICAL VEHICLE SOCKET-OUTLETS AND CHARGING STATIONS

(Informative)

P1 SCOPE AND GENERAL

P1.1 Scope

This Appendix provides guidance for—

(a) circuits intended to supply energy to electric vehicles; and

(b) circuits intended for feeding back electricity from electric vehicles into the supply system.

This applies to off-board equipment including the vehicle connector for charging electric road vehicles, with a rated supply voltage up to 1000 V a.c. or up to 1500 V d.c. and a rated output voltage up to 1000 V a.c. or up to 1500 V d.c.

Electric road vehicles (EV) imply all road vehicles, including plug-in hybrid road vehicles (PHEV), that derive all or part of their energy from on-board rechargeable energy storage systems, (RESS), including traction batteries.

NOTES:

1 Requirements for electrical devices and components used in EV supply equipment are covered by their specific product standards.

2 EMC requirements for off-board equipment are covered in IEC 61851-21.

3 Requirements for bidirectional energy transfer are under consideration.

P1.2 Applications

The applications to which this Appendix provides guidance are as follows:

(a) The characteristics and operating conditions of the off-board charging equipment.

(b) The connection between the off-board charging equipment and the electric vehicle.

(c) The required level of electrical safety for the off-board charging equipment.

P1.3 Additional requirements and tests

Requirements and tests referenced in this Standard can be found in the following Standards:

(a) AS/NZS 61439 series for tests and related requirements for low-voltage switchgear and controlgear assemblies.

COPYRIGHT

Copyright Standards New Zealand

auto login of Electrical Workers Licensing Group is licenced to temporarily download this document.
Electrical Workers Licensing Group may print this document but not more than 10% of the documents subscribed to may be held in printed form at any one time.

(b) IEC 62752 for the in-cable control protection device for Mode 2 charging of electric road vehicles (IC-CPD) as a part of the complete system.

(c) IEC 62196 series for vehicle coupler, plug and socket-outlet.

P1.4 Exclusions

This Appendix does not provide guidance on—

(a) safety aspects related to maintenance; and

(b) charging of trolley buses, rail vehicles, industrial trucks and vehicles designed primarily for use off-road.

P1.5 Definitions

P1.5.1 *Connecting point*

Point where one EV is connected to the fixed installation.

NOTE: The connecting point is a socket-outlet or a vehicle connector.

P1.5.2 *Mode 1 charging*

Connection of the EV to the a.c. supply network (mains) utilizing standardized socket-outlets not exceeding 20 A and not exceeding 250 V a.c. single-phase or 480 V a.c. three-phase at the supply side and utilizing the live and protective earth conductors.

P1.5.3 *Mode 2 charging*

Connection of the EV to the a.c. supply network (mains), utilizing standardized single-phase or three-phase socket-outlets not exceeding 32 A and not exceeding 250 V a.c. single-phase, or 480 V a.c. three-phase at the supply side and utilizing the live and protective earth conductors, together with a control pilot function and system of personnel protection against electric shock (RCD) between the EV and the plug or as part of the in-cable control box.

P1.5.4 *Mode 3 charging*

Connection of the EV to the a.c. supply network (mains) utilizing dedicated EV supply equipment where the control pilot function extends to control equipment in the EV supply equipment permanently connected to the a.c. supply network (mains).

P1.5.5 *Mode 4 charging*

Connection of the EV to the a.c. supply network (mains) utilizing an off-board charger where the control pilot function extends to equipment permanently connected to the a.c. supply.

P1.5.6 *Demand factor*

Ratio expressed as a numerical value or as a percentage of the maximum demand of a circuit or a group of circuits within a specified period to the corresponding total installed load of the circuit(s).

COPYRIGHT

auto login of Electrical Workers Licensing Group is licenced to temporarily download this document.
Electrical Workers Licensing Group may print this document but not more than 10% of the documents subscribed to may be held in printed form at any one time.

Copyright Standards New Zealand

auto login of Electrical Workers Licensing Group is licenced to temporarily download this document.
Electrical Workers Licensing Group may print this document but not more than 10% of the documents subscribed to may be held in printed form at any one time.

P1.5.7 *Vehicle coupler*

Means of enabling the manual connection of a flexible cable to an EV for the purpose of supplying electric energy to an EV. It consists of two parts; a vehicle connector and a vehicle inlet.

P1.5.8 *Vehicle connector*

Part of a vehicle coupler integral with, or intended to be attached to, the cable assembly.

P1.5.9 *Vehicle inlet*

Part of a vehicle coupler incorporated in, or fixed to, the EV or intended to be fixed to it.

P2 MAXIMUM DEMAND

In normal use, each single connecting point is considered to be used at its full rated current.

If there is more than one connecting point in an installation then it is considered that all the connecting points of the installation can be used simultaneously.

P3 INSTALLATION

P3.1 General

A dedicated circuit should be provided for the connecting point of an EV.

Every socket-outlet or vehicle connector should be located as close as practicable to the EV parking place supplied.

P3.2 External Influences

P3.2.1 *Water or high humidity*

Where the connection point is installed outdoors the equipment should be selected with a degree of protection of at least IPX4 in order to protect against water splashes.

P3.2.2 *Solid foreign bodies*

Where the connection point is installed outdoors, the equipment should be selected with a degree of protection of at least IP4X in order to protect against the ingress of small objects.

P3.2.3 *Mechanical damage*

Equipment installed in public areas and car park sites should be protected against mechanical damage. Protection of the equipment should be afforded by one or more of the following:

(a) The position and location should be selected to avoid any damage by any reasonable foreseeable impact.

(b) Local or general mechanical protection should be provided.

COPYRIGHT

(c) Equipment should be installed to comply with a minimum degree of protection against external impact of IK07, as specified in IEC 62262.

P4 DEVICES FOR PROTECTION AGAINST INDIRECT CONTACT BY AUTOMATIC DISCONNECTION OF SUPPLY

P4.1 RCDs

Each connecting point should be protected by its own RCD of at least Type A, having a rated residual operating current not exceeding 30 mA.

Where the EV charging station is equipped with a socket-outlet or vehicle connector complying with the IEC 62196 series, protective measures against d.c. fault current should be taken, except where provided by the EV charging station. The following measures apply for each connection point:

(a) RCD Type B.

(b) RCD Type A and appropriate equipment that ensures disconnection of the supply in case of d.c. fault current above 6 mA.

The requirements of AS/NZS 3190, AS/NZS 61008, AS/NZS 61009, AS/NZS 60947 series or IEC 62423 apply to RCDs.

RCDs should disconnect all live conductors.

P4.2 Devices for protection against overcurrent

Each connecting point should be supplied individually by a final subcircuit protected by an overcurrent protective device complying with AS/NZS 60898 series, AS/NZS 61009 series or AS/NZS 60947 series.

P4.3 Protective conductors

Control signals on the protective conductor (PE) should not flow into the fixed electrical installation. Equipment should be selected accordingly.

Such signals and the related devices should not impair the correct functioning of the devices installed to provide the protective measure of automatic disconnection of supply (e.g. RCD).

P5 OTHER EQUIPMENT

P5.1 Socket-outlets and vehicle connectors

Each connecting point should be provided with one socket-outlet or vehicle connector complying with either IEC 62196-1, where interchangeability is not required, or AS IEC 62196-2 or IEC 62196-3, where interchangeability is required.

Socket-outlets with a rated current not exceeding 20 A that comply with AS/NZS 3112, AS/NZS 3123 or IEC 60309 may also be used.

Each socket-outlet should have an earthing contact connected to the protective conductor (PE). Portable socket-outlets are not permitted.

One socket-outlet or vehicle connector should supply only one EV.

COPYRIGHT

auto login of Electrical Workers Licensing Group is licenced to temporarily download this document.
Electrical Workers Licensing Group may print this document but not more than 10% of the documents subscribed to may be held in printed form at any one time.

Copyright Standards New Zealand

P5.2 Ratings of vehicle couplers, socket-outlets and plugs

P5.2.1 *Type 1 vehicle coupler*

A Type 1 vehicle coupler is rated at 250 V, 20 A single-phase.

P5.2.2 *Type 2 vehicle coupler, socket-outlet and plug*

A Type 2 vehicle coupler, socket-outlet and plug are to be rated—

(a) 250 V, 20 A, 32 A, 63 A or 70 A, single-phase; or

(b) 380–480 V, 20 A, 32 A or 63 A, three-phase.

P5.2.3 *Type 3 vehicle coupler*

A Type 3 vehicle coupler is rated—

(a) 250 V, 20 A or 32 A, single-phase; or

(b) 380–480 V, 32 A or 63 A, three-phase.

P5.2.4 *Type 3 socket-outlet and plug*

A Type 3 socket-outlet and plug are rated—

(a) 250 V, 20 A or 32 A, single-phase; or

(b) 380–480 V, 32 A or 63 A, three-phase.

P5.3 Permitted socket-outlets or vehicle connectors

Each a.c. connecting point should incorporate—

(a) one 20 A 250 V socket-outlet complying with AS/NZS 3112;

(b) one 20 A 250 V socket-outlet complying with AS/NZS 3123 or IEC 60309;

(c) one Type 1 vehicle connector complying with AS IEC 62196-2 for use with Mode 3 charging only;

(d) one Type 2 socket-outlet or vehicle connector complying with AS IEC 62196-2 for use with Mode 3 charging only; and

(e) one Type 3 socket-outlet or vehicle connector complying with AS IEC 62196-2 for use with Mode 3 charging only.

NOTE: Vehicle manufacturer's instructions should be followed when determining the type of socket-outlet or vehicle connector to be installed.

Socket-outlets should be suitable for the intended application and location of installation, and should comply with the requirements of the relevant Standards.

P5.4 Types of connection

P5.4.1 *Case A connection*

Connection of an EV to the a.c. supply utilizing a supply cable and plug permanently attached to the EV with the plug connected to a socket-outlet (see Figure P1).

COPYRIGHT

Copyright Standards New Zealand

auto login of Electrical Workers Licensing Group is licenced to temporarily download this document.
Electrical Workers Licensing Group may print this document but not more than 10% of the documents subscribed to may be held in printed form at any one time.

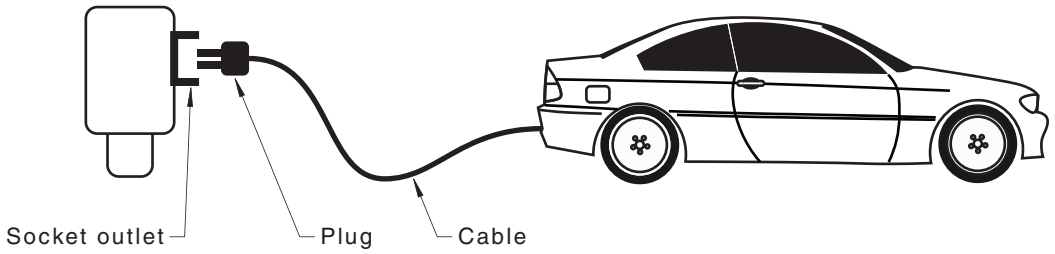

FIGURE P1 CASE A CONNECTION

P5.4.2 *Case B connection*

Connection of an EV to the a.c. supply utilizing a detachable cable assembly with a vehicle connector and a.c. supply connection to a socket-outlet (see Figure P2).

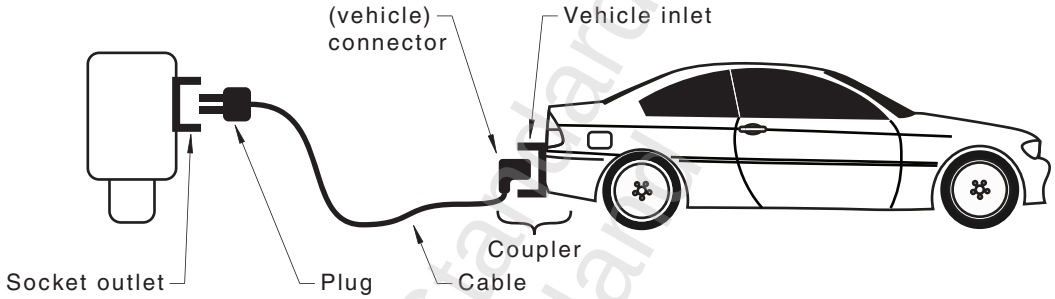

FIGURE P2 CASE B CONNECTION

P5.4.3 *Case C connection*

Connection of an EV to the a.c. or d.c. supply utilizing a supply cable and vehicle connector permanently attached to the supply equipment (see Figure P3).

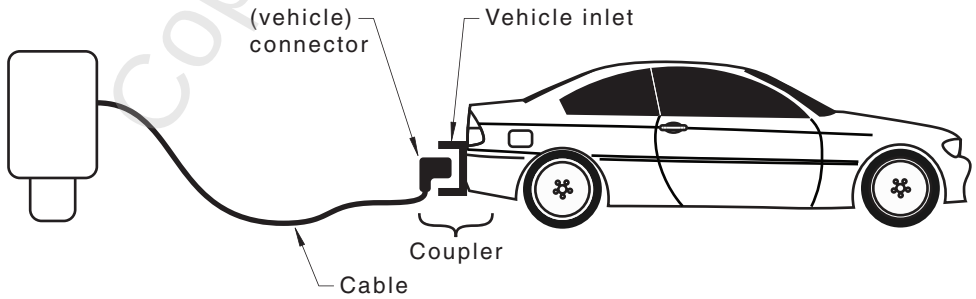

FIGURE P3 CASE C CONNECTION

Copyright Standards New Zealand

auto login of Electrical Workers Licensing Group is licenced to temporarily download this document.
Electrical Workers Licensing Group may print this document but not more than 10% of the documents subscribed to may be held in printed form at any one time.

P6 CHARGING STATIONS AND CABLES

Charging stations should be so designed that the charging cable cannot be inadvertently run over or pinched.

Where a charging cable may come into contact with the ground (such as soil, concrete, asphalt, stone, etc.) the ground surface should be of such a nature that the outer sheath of the charging cables is not damaged.

Consideration should be given to using earth-screened cable.

NOTE: Rough surfaces on concrete or rough asphalt are examples of surfaces where the outer sheath of the cable can be significantly damaged. This can lead to puncturing of the outer sheath, water penetration and puncture of the insulation.

EV charging stations should be designed in accordance with IEC TS 61439-7.

P7 PERIODIC VERIFICATION

Publicly available EV charging stations should be inspected at least once per week in order to verify that—

(a) the equipment is not visibly damaged in such a way that the safety may be impaired; and

(b) the EV charging station is not showing any indications of operational faults or errors.

Publicly available EV charging stations should be inspected at least once per year to verify correct operation.

auto login of Electrical Workers Licensing Group is licenced to temporarily download this document.
Electrical Workers Licensing Group may print this document but not more than 10% of the documents subscribed to may be held in printed form at any one time.

Copyright Standards New Zealand

APPENDIX Q

*

D.C. CIRCUIT PROTECTION APPLICATION GUIDE

(Informative)

Q1 SCOPE

This Appendix provides guidance for the selection of circuit protection and switching devices operated on a d.c. supply that would be deemed to meet the design, equipment selection and installation criteria of this Standard.

Q2 GENERAL

Where a single contact is used to interrupt the current flow of a d.c. circuit, consideration should be given to the size of the contact, the air gap, arc suppression and the use of multiple contacts.

Q3 ARC SUPPRESSION

When a contact carrying d.c. current is opened, an arc is formed between each set of contacts as they are opened, and to increase the resistance of the arc and to reduce the current flow to zero as quickly as possible, an arc chute for each set of contacts is used to increase the length of the arc, cool the arc and to increase the arc resistance until the current flowing is reduced to zero.

In some devices, but not all, the use of a permanent magnet in each arc chute assembly is used to assist in drawing of the arc into the arc chute to increase the length and resistance of the arc until the current flow is reduced to zero.

Q4 SWITCHGEAR TYPES

Q4.1 Polarized

When the d.c. load current can flow in only one direction in normal or fault conditions, the use of polarized devices is possible.

Polarized devices are fitted with a permanent magnet to assist in the magnetic deflection of the arc into the switchgear arc chute to increase the arc length when the device contacts are opening. To be able to perform this deflection function, the magnetic field in the load-carrying parts of the device should be such that the magnetic field of the magnet is arranged for the maximum deflection force. The correct external polarity connections of the device will ensure correct operation of the arc deflection forces.

A typical application of a polarized overcurrent device is a distribution switchboard providing a supply to d.c. operated equipment. This configuration will only allow load current to flow in one direction.

COPYRIGHT

auto login of Electrical Workers Licensing Group is licenced to temporarily download this document.
Electrical Workers Licensing Group may print this document but not more than 10% of the documents subscribed to may be held in printed form at any one time.

Copyright Standards New Zealand

Q4.2 Non-polarized type

When it is possible that the d.c. load current could flow in either direction in normal or fault conditions, the use of non-polarized devices is necessary.

As the d.c. current is able to flow in two directions, this means a magnetic field from a fixed magnet is not able to be used.

A typical application use of a non-polarized type device is a battery overcurrent device in which the current flow can be in two different directions; the battery charge current when being float charged, and the battery when being discharged by the load and when no output from the d.c. charging source is available.

Q5 D.C. RATINGS

Q5.1 General

All d.c. isolating switches, contactors and overcurrent devices should be identified as being suitable for operation on a d.c. supply. The maximum current and voltage ratings specified by the manufacturer should not be exceeded and the multiple series contact arrangement detailed in the manufacturer's instructions should be used.

For operating voltages above 60 V d.c. (ELV) this will usually require the use of two or more contacts in series to achieve the specified operating voltage and current ratings.

Q5.2 Earthed D.C. supply

The d.c. supply may be operated as a separated (isolated) supply. All switching or overload devices should operate in all unearthed conductors; all multi-pole devices should be linked together so that all contacts will operate substantially together.

One pole of the d.c. supply may be earthed. Any switching device may operate in the unearthed conductor only.

Exception: A multi-pole device is permitted in all conductors (including the earthed conductor) in this application. All contacts should be linked together so that all contacts operate substantially together.

Q6 PROVISION OF ISOLATION AND OVERCURRENT PROTECTION

The applicable requirements of Sections 2 to 7 of this Standard apply for the provision of isolation and overcurrent protection of the d.c. system.

Exception: Earth leakage protection by use of RCDs is not required, as no suitable protection devices are currently available.

Q7 SWITCHBOARD LOCATIONS

Clause 2.10 of this Standard specifies requirements for the location of switchboards containing a main switch and overcurrent devices.

COPYRIGHT

Electrical Workers Licensing Group may print this document but not more than 10% of the documents subscribed to may be held in printed form at any one time.
auto login of Electrical Workers Licensing Group is licenced to temporarily download this document.

Copyright Standards New Zealand

Q8 FINAL SUBCIRCUIT WIRING AND FITTINGS

All wiring for the direct current system should be suitable for use on a d.c. supply. Installation requirements are specified in Sections 3 and 4 of this Standard.

If twin cables are not used, all single cables should be positioned in close proximity of each other to provide cancellation of the magnetic field when d.c. current is flowing.

Segregation of 25 mm minimum should be maintained from all d.c. cabling to the a.c. wiring in switchboards and cabling within the installation.

The use of fittings designed solely for use on LV a.c. electrical installations only should not be used for d.c. installations.

All d.c. socket-outlets should be provided with a d.c. rated control switch.

The plugs of a.c. operated equipment should not be able to enter socket-outlets connected to the d.c. distribution system, or vice versa.

Q9 INVERTERS

If the d.c. supply system has an inverter providing a 230 V a.c. supply output, unless the inverter a.c. output is not permanently marked as providing full electrical isolation from the d.c. input to the a.c. output, all parts of the d.c. supply system should be insulated and screened from touch for 230 V a.c. operation.

NOTES:

1 An inverter which does not provide for full electrical isolation between the d.c. input and a.c. output, is considered to be a ‘transformer-less’ or a ‘non-isolated’ design, and under some fault conditions can result in the d.c. supply being raised to the potential of the a.c. output.

2 For a.c. only switch contacts and overcurrent device contacts, all contacts have a small air gap to ensure the a.c. arc supply current through the load current drops down to zero, twice for every cycle of the supply voltage until the arc is extinguished. The breaking of d.c. supply current, which will draw an arc across the switch’s opening contacts, requires that the arc increase in resistance until the current no longer flows (may be effected by increasing the length of the arc by the action of magnetic blow-out arcing contacts). Any a.c. only switch used in such circumstances on a d.c. supply will be unable to sufficiently increase the resistance of the continuous arc across its contacts; the likely result will be that the arcing will continue until the switch contacts are destroyed.

auto login of Electrical Workers Licensing Group is licenced to temporarily download this document.
Electrical Workers Licensing Group may print this document but not more than 10% of the documents subscribed to may be held in printed form at any one time.

Copyright Standards New Zealand

INDEX

A

abnormal voltages
***See also* overvoltage protection**
protection against 1.5.11.1
circuits operating at different voltages 1.5.11.2
different circuits and installations 1.5.11.5
voltage disturbances and electromagnetic influences 1.5.11.3
voltage in unused conductors 1.5.11.4

accessibility
assisted living situations App M1.2
socket-outlets 4.4.2.1
switchboards 2.10.2

accessible
definition 1.4.2
readily, definition 1.4.3

accessories
cables suitable for operating temperature 3.3.2.2
definition 1.4.4
earthing conductor 5.5.1.1
electrical generating systems 7.3.7
fire hazard 4.2.2.6
ingress protection (IP) rating 4.1.3
lighting equipment 4.5
moisture retention 6.6.3.3
protection from external influences 4.1.3
saunas 6.5.4.4
thermal insulation, New Zealand 4.2.2.7
wet areas 6.2.4.3, 6.3.4.4, 6.4.4.4

acoustic insulation 4.2.2.6

active
definition 1.4.5

active assisted living (AAL)
power outages App M2

active conductors
colouring 3.8.3.3
polarity 8.3.7.1, 8.3.7.2

active-to-earth fault App B4.4

actual primary current App C2.5.2.1

adjacent
definition 1.4.6

aerial conductors 3.12
clearances
general provisions 3.12.3.1
conductive supports 5.4.5
definition 1.4.7
extra-low voltage electrical installations 7.5.11.2
installation 5.5.5.4
insulation 3.12.2.1
joints and connections 3.7.2.9.1, 3.7.2.9.2, 3.12.7
minimum size 3.12.2.2
poles
attachments to buildings or structures App D3
general requirements App D2
minimum sizes App D1
using tables to determine size App D4
poles and posts 3.12.6
prohibited joints 3.7.2.9.2
safety warning 3.12.3.2
supports
distance between 3.12.4
hardware 3.12.5.3
pin-type insulators 3.12.5.2
spacing between conductors 3.12.5.4
types 3.12.1

after diversity maximum demand App C2.1

agricultural shows 7.8.2.5

airconditioning
energy efficiency App E2.3.4
ignition sources 4.18.2.1
isolating switches 4.19
gas relief vent terminals 4.18.4
load points
maximum demand App C, Tables C1, C3

air-handling systems
interposing switches 7.2.7.2.3
segregation of cables 7.2.7.2.2
wiring systems 7.2.7.2.1

alteration
definition 1.4.8

alterations to electrical installations 1.9.3.1

alternating current systems 2.3.2.1.2

alternative supplies
changeover devices 7.3.8.1.2
connections to installation 7.3.8.1.1
continued occupation 7.2.2.3.1
stand-by supply 7.3.1

ambient temperature
wiring systems, influence on 3.3.2.1

COPYRIGHT

auto login of Electrical Workers Licensing Group is licenced to temporarily download this document.
Electrical Workers Licensing Group may print this document but not more than 10% of the documents subscribed to may be held in printed form at any one time.

Copyright Standards New Zealand

appliances
***See also* gas appliances**
cables suitable for operating temperature 3.3.2.2
capacitors in parallel 4.15.3.2
circuit loads App C5
cooking
clearance from open surfaces 4.7.3
maximum demand App C, Tables C1, C2, C2.5.3
New Zealand connections 4.7.2
New Zealand non-residential installations 2.6.3.3.2
switchboard locations 2.10.2.5
switching device 4.7.1
definition 1.4.9
earthing conductor 5.5.1.1
equipment wiring capacity 4.3.6
fixed
definition 1.4.10
design and construction 6.6.3.5
fire hazard 3.9.9.2, 4.2.2.6
flexible cords 3.9.7.4
hand-held, definition 1.4.11
installation in classified zones 6.2.4.5, 6.3.4.5, 6.4.4.5
insulation resistance testing 8.3.6.2
isolating switches 2.2.1.3
portable, definition 1.4.12
sauna heating 6.5.4.5
stationary, definition 1.4.13
steam producing and water heaters 4.8.2.1–4.8.2.3
temperature limits 4.2.3
thermal insulation, New Zealand 4.2.2.7
utilization voltage 1.6.4
arc fault detection devices (AFDDs) 2.9, App O
alterations 2.9.5
arrangement 2.9.4
characteristics App O2
definition 1.4.14
final subcircuits
Australia 2.9.6
New Zealand 2.9.7
fire hazard protection 2.9.1
general requirements App O3
load current rating 2.9.3
location, selection and installation App O4
rating 2.9.3
type 2.9.2
arc suppression App Q3
arc welding machines App C2.5.2
area, hazardous
definition 1.4.15
arm's reach
definition 1.4.16
temperature limits
definition 4.2.3
armoured cables
definition 1.4.22
sheathed 1.9.7.2
assisted living situations
power supply App M1
authority, regulatory
definition 1.4.17
authorized person
definition 1.4.18
auto-reclose devices 2.4.4
automatic disconnection 2.4.2
device types 2.4.3
automatic fire-sprinklers
switchboard locations 2.10.2.5
available, readily
definition 1.4.19

B

backup (cascading) protection 2.5.7.2.1, App K7.2.2
ballasts 4.2.2.3
barriers
definition 1.4.20
protection by 1.5.4.4
bars, terminal: *See* terminal bars
basic protection
barriers or enclosures 1.5.4.4
extra-low voltage systems 1.5.7
insulation 1.5.4.3
methods of 1.5.4.2
obstacles 1.5.4.5
placing out of reach 1.5.4.6
RCDs 1.5.6.1
baths and showers
***See also* damp situations**
electric shock, prohibited protection measures 6.2.3
electrical equipment, selection and installation 6.2.4.1–6.2.4.5
luminaires 6.2.4.4
switches 6.2.4.3
electricity generation systems 6.2.4.7
equipotential bonding 5.6.2.5
switchboard locations 2.10.2.5, 6.2.4.6
zone classifications 6.2.2.1
batteries 4.17

auto login of Electrical Workers Licensing Group is licenced to temporarily download this document.
Electrical Workers Licensing Group may print this document but not more than 10% of the documents subscribed to may be held in printed form at any one time.

Copyright Standards New Zealand

battery systems 7.3.1, 7.3.2
secondary 7.8.2.15
supply interruption 7.3.4.2
braided conductors 5.3.2.1.1
building classifications
multiple App E2.2.3
parts with more than one classification App E2.2.4
types App E2.2.2
Building Code of Australia App E2.1
fire safety App E2.3.2
general safety, health and amenity App E2.3.3
sustainable energy efficiency App E2.3.4
switchboards, wiring system rating App H2.1
building consents
New Zealand Building Code App E3.3
bundled insulated cables 3.12.1
burns, protection against 4.2.3
busbars 3.9.7.1.2
busways App H4.3
wiring systems 3.15

C

cable core
definition 1.4.23
cable trunking 3.10.3.9
direct sunlight, installation 3.10.3.7
enclosed wiring systems App H4.4
cables
***See also* segregation of cables**
a.c. circuits 3.9.10.2
aerial wiring 3.12.1
armoured
definition 1.4.22
installation 3.9.7.2
underground wiring 3.11.3.1
colours 1.7.2
conduits, maximum number
guide App C6.1
application notes App C6.3
calculations App C6.2
definition 1.4.21
flexible, definition 1.4.24
imperial and metric sizes App I3
insulated 3.4.2, 3.9.7.1.2, 3.9.7.2, 3.10.1.1, 3.10.1.2
joints
enclosed 3.7.3
prohibited 3.7.2.9.2
low voltage, separation 3.9.8.4
mineral insulated metal sheathed (MIMS), definition 1.4.25
multiphase 3.8.3.4
neutral-screened, definition 1.4.26
sheathed, definition 1.4.27
simplified protective device, selection App C3
simplified voltage drop App C4.1
examples App C4.2
formula App C4.1
single-phase 3.8.3.4
stranded 3.7.4
unarmoured
installation 3.9.7.2
underground 3.7.2.10
XLPE 3.9.7.1.2
capacitors 4.15.1
current-carrying capacity of supply conductors 4.15.2.3
discharge and control 4.15.3.1
connected in parallel with appliances 4.15.3.2
not connected in parallel with appliances 4.15.3.3
general requirements 4.15.2.1
rating of circuit-breakers, switches or contactors 4.15.2.2
carnivals 7.8.2.5
catenary wiring
clearances 3.13.3
definition 1.4.129
earthing conductors 5.3.2.4
as protective earthing conductor 5.3.2.2, 5.3.2.3
supports 3.13.2
types 3.13.1
cathodic protection systems 5.2.2, 5.8
ceiling, suspended
definition 1.4.28
CFS units: *See* fuses
changeover devices 7.3.8.1.2
circuit arrangements 1.6.5, 2.2.1.1, App B2
common neutral 2.2.1.3
electric vehicle charging circuits 2.2.1.4
electrical separation 7.4.3
maximum demand App C2
domestic installations App C2.3
final subcircuits App C2.5
non-domestic installations App C2.4
origin of submains and final subcircuits 2.2.1.2
overcurrent protection 2.5.1.3

COPYRIGHT

auto login of Electrical Workers Licensing Group is licenced to temporarily download this document.
Electrical Workers Licensing Group may print this document but not more than 10% of the documents subscribed to may be held in printed form at any one time.

Copyright Standards New Zealand

protected extra-low voltage systems (PELVS) 7.5.6
separated extra-low voltage systems (SELVs) 7.5.5
circuit-breakers 2.5.2
definition 1.4.30
discrimination 2.5.7.2.3
miniature overcurrent circuit breakers (MCBs) 5.7.4
overcurrent protection App B3.2.2.2
time/current curves App B4.5
circuit protection guide App B
circuits
***See also* circuit arrangements**
control 2.3.7.4
d.c.: *See* d.c. circuit protection guide
definition 1.4.29
integrity App H1
maximum length App B5
calculation App B5.2.2
number of points connected to App C5
operating at different voltages, protection 1.5.11.2
safety service discrimination 2.5.7.2.2
circulating currents 3.9.10.2
circulating harmonic currents 4.12.5.1, 7.3.5.1
class I equipment
definition 1.4.31
class II equipment
definition 1.4.32
class III equipment
definition 1.4.33
classes 1–10 buildings App E2.2.2
clean earth conductors 5.2.2, 5.3.7
clearances
recessed luminaires 4.5.2.3.1
switchboards App K6.3
cold cathode illumination systems 7.1.2
cold rooms: *See* refrigeration rooms
colours, marking
conductors 1.7.2, 3.8.1–3.8.3
European colours 3.8.3.4
exceptions and special applications 3.8.3.2–3.8.3.5
sleeving of existing earthing and bonding conductors 3.8.2.2
sleeving of existing live conductors 3.8.2.3
sleeving or other means 3.8.2.1
conductor insulation 5.2.2
MEN connection 5.3.5.3
emergency switches 2.3.5.4
lift circuits 4.20.3
switchboards location, main 2.10.2.4
switches, identification 2.3.3.5, 7.2.4.4
underground wiring markers 3.11.4.5
combustible dusts: *See* hazardous areas
common neutral conductors 2.2.1.3
communal areas
degree of protection 6.2.4.1
maximum demand App C2.3.2.3
competent person
definition 1.4.34
compliance 1.9
alterations 1.9.3.1
other standards, with 1.9.2
Part 2 of Standard, with 1.9.1
repairs 1.9.3.2
specific design and installation
acknowledgment by owner and operator 1.9.4.2
competency of designers 1.9.4.5
documentation by designer 1.9.4.3
identification 1.9.4.6
Part 1 design 1.9.4.1
verification 1.9.4.4
conductive building materials 5.4.6
conductive water piping
equipotential bonding 5.6.2.2
conductors
active 3.8.3.3
aerial: *See* aerial conductors
aluminium 3.7.2.1.2, 5.3.2.1.2
bare, definition 1.4.36
braided 5.3.2.1.1
colouring 3.8.2.1
exceptions and special applications 3.8.3.2–3.8.3.5
existing earthing and bonding conductors 3.8.2.2
existing live conductors 3.8.2.3
common neutral 2.2.1.3
controlgear, selection and installation 2.2.3
copper 5.3.2.1.1
definition 1.4.35
earthing 3.5.3
See also earthing conductors
equipotential bonding 5.6.3.1
size 5.6.3.2
in parallel 3.4.3, 3.6.3
main earthing 5.3.3.2
metric sizes for imperial types App I3
neutral 3.5.2

COPYRIGHT

Copyright Standards New Zealand

auto login of Electrical Workers Licensing Group is licenced to temporarily download this document.
Electrical Workers Licensing Group may print this document but not more than 10% of the documents subscribed to may be held in printed form at any one time.

nominal cross-sectional area 3.5.1
overload protective devices, coordination with App B3.2
protective App P4.3
protective earth and neutral (PEN) 3.5.2
solid 5.3.2.1.1
spacing between 3.12.5.4
steel 3.12.2.2
stranded 3.7.2.5, 5.3.2.1.1
stranded, retention 3.7.2.5
unused, voltage in 1.5.11.4

conduits
classification App N3
electrical App N
marking App N2
maximum number of cables App C6.1
application notes App C6.3
calculations App C6.2
relevant standards App N1
standards App N1

connecting electrical equipment 4.3.1
direct 4.3.2.1
equipment wiring 4.3.6
installation coupler 4.3.2.2
requirements 4.3.3.1
socket-outlets 4.3.3.2, 4.3.4
other devices 4.3.5

connecting point App P1.5.1

connectors
electric vehicles App P5.1

construction sites 7.8.2.1

consumer mains and submains
consumer mains, definition 1.4.37
earth fault-loop 5.7.3
earthing conductor 5.3.3.2
exposed conductive parts 5.5.3.5
harmonic currents 3.5.2
isolating switches 2.3.4.2
maximum demand 2.2.2
calculation App C2.2
origin of 2.2.1.2
overcurrent protection 2.5.1.2, 2.5.1.3, 4.12.5.2.1
short-circuit protective device 3.9.7.1.1
submains, definition 1.4.116
unprotected
earthing 5.5.3.5
visual inspection 8.2.2

contact, direct
definition 1.4.38

contact, indirect
definition 1.4.39

control 2.3
common requirements 2.3.2
devices 1.5.2
main switches 7.5.8.1
other switches 7.5.8.2

control circuits
fire-pump motors 7.2.5.6.4

controlgear 2.1.1
***See also* electrical installations**

cooking appliances
clearance from open surfaces 4.7.3
maximum demand App C Tables C1, C2, C2.5.3
New Zealand connections 4.7.2
New Zealand non-residential installations 2.6.3.3.2
switchboard locations 2.10.2.5
switching device 4.7.1

cool rooms: *See* refrigeration rooms

cord, flexible: *See* flexible cords

corrosive or polluting substances
wiring systems, influence on 3.3.2.5

cranes 7.8.2.7

creepage
switchboards App K6.5

crimp joints (compression joints) 3.7.2.3.2

cross-linked polyethylene insulation 3.4.2

cupboards
switchboard locations 2.10.2.5

current, fault
definition 1.4.41

current, overload
definition 1.4.42

current, short-circuit
definition 1.4.43

D

d.c. circuit protection guide App Q
arc suppression App Q3
final subcircuit wiring and fittings App Q8
inverters App Q9
isolation App Q6
overcurrent protection App Q6
ratings App Q5
switchboard locations App Q7
switchgear types App Q4

d.c. load current
non-polarized switchgear App Q4.2
polarized switchgear App Q4.1

d.c. ratings App Q5

auto login of Electrical Workers Licensing Group is licenced to temporarily download this document.
Electrical Workers Licensing Group may print this document but not more than 10% of the documents subscribed to may be held in printed form at any one time.

Copyright Standards New Zealand

damp situations 6.1
***See also* baths and showers; refrigeration rooms; sanitization operations; saunas; spa pools and tube; swimming pools; socket-outlets; water features**
baths and showers 6.2
definition 1.4.44
equipment, selection for 1.7.4
fixed water containers 6.2
refrigeration rooms 6.6
sanitization 6.7
saunas 6.5
spa pools and tubs 6.3
swimming pools 6.3
water features 6.4
dangerous areas: *See* hazardous areas
dangers and damage
protection against 1.5.1
de-energized
definition 1.4.45
definitions 1.4
demolition sites 7.8.2.1
design 1.6
wiring systems
circuit arrangement 1.6.5
maximum demand 1.6.3
supply characteristics 1.6.2
utilization voltage 1.6.4
dielectric liquids 4.16.1
flashpoint not exceeding 250°C 4.16.2
dielectric tests
switchboards App K6.7
direct current systems 2.3.2.1.3
disconnection
automatic App B4
earth fault-loop App B4.4–B4.6
principle App B4.2
times 1.5.5.3, App B4.3
discrimination (selectivity)
protection 2.5.7.2.1
circuit-protective devices 7.2.3.5
general supply circuit 2.5.7.2.3
safety service circuit 2.5.7.2.2
supply isolating device 7.2.3.4
distribution boards App K3.3, K8.1, K8.2
definition 1.4.46
earthing 5.5.2.2.3
operated by ordinary persons (DBOs) App K3.3, K8.1, K8.2
protective earthing conductors 5.5.2.2.3
surge protective devices (SPDs) App F1.2.2
domestic cooking appliances: *See* cooking appliances
door seals, refrigeration rooms 6.6.3.6
downstream conductors App B4.4
downstream protective devices 2.5.7.2.3, App B4.4
downstream switchboards 7.2.5.4, 7.2.6.3, 7.2.7.2.3, 7.2.9.4
drain wires 5.3.3.4
dry-type battery 7.5.9
duct heaters 4.11
duty cycle App C2.5.2.1

E

earth electrodes 5.3.6.1
installation 5.3.6.3
location 5.3.6.4
types 5.3.6.2
earth fault currents
protection against 1.5.10
earth fault-loop impedance (EFLI) 1.5.5.3, 5.7.1
calculating App B4.5
definition 1.4.49
disconnection times 5.7.2
fault-loop 5.7.3, App B4.4
impedance 5.7.4
measurement App B4.6
protection by 1.5.53
verification
low voltage socket-outlet circuits 8.3.9.1
no supply available 8.3.9.2.3
results 8.3.9.3
supply available 8.3.9.2.2
earth sheath return (ESR) system 2.3.2.1.2, 3.16
earthed
definition 1.4.47
earthed situation
definition 1.4.48
earthing 5.1
***See also* earthing conductors**
aerial conductors, conductive supports 5.4.5
arrangements 5.1, 5.5, 5.8
conductive building materials 5.4.1.2, 5.4.6.1, 5.4.6.2

Copyright Standards New Zealand

auto login of Electrical Workers Licensing Group is licenced to temporarily download this document.
Electrical Workers Licensing Group may print this document but not more than 10% of the documents subscribed to may be held in printed form at any one time.

conductors: *See also* earthing conductors; equipotential bonding
aluminium 5.3.2.1.2
catenary wires 5.3.2.2
copper 5.3.2.1.1
cross-sectional area 5.3.3
identification 5.3.2.5
insulation 5.3.2.4
other materials 5.3.2.1.3
protective earthing 5.3.2.2
size 5.3.3
special conditions 5.3.2.3
types 5.3.2.2
connections 5.5.6.1
constructional components 5.5.6.2
continuity of 5.5.4.1
conductive sheaths, armours and screens of cables 5.5.4.3
conductive wiring enclosures 5.5.4.2
connecting devices 5.5.4.4
distribution boards 5.5.2.2.3
earth electrodes 5.3.6.1
installation 5.3.6.3
location 5.3.6.4
types 5.3.6.2
earth fault-loop impedance 5.7
disconnection times 5.7.2
fault-loop 5.7.3
impedance 5.7.4
supplementary equipotential bonding 5.7.5
testing 8.3.9
electricity generation systems 7.3.6
equipment 5.4, 5.5.2.2.2
connection to earth 5.4.1.3
exposed conductive parts 5.4.1.1
supplied by flexible cords/cables 5.5.3.3
equipotential bonding 5.6
flexible cords, cables 5.5.3.3
functions 5.2
combined protective and functional purposes 5.2.3
functional earthing 5.2.2, 5.3.7
lighting points 5.4.3
luminaires 5.4.4
main terminal/connection or bar 5.3.4
MEN connection system 5.3.5.1
identification 5.3.5.3
size 5.3.5.2
MEN system 5.1.3, 5.3
non-MEN systems 5.1.4
other arrangements 5.8
outbuildings 5.5.3.1
protective earthing 5.2.1
selection and installation 5.1.2
socket-outlets 5.4.2
structural metalwork 5.4.6
submersible pumps 5.4.7
switchboards 5.5.3.4, App K6.6
system
continuity 8.3.5
parts 5.3.1
testing 8.3.3.1
unprotected consumer mains 5.5.3.5
variable frequency devices 5.4.8
visual inspection 8.2.2
wiring systems 5.5.3.2
earthing conductors 3.7.2.11
***See also* earthing**
connections 5.5.6.1
control and isolation 1.5.2
functional 5.3.7
installation 5.5.5
aerial 5.5.5.4
buried 5.5.5.5
corrosion, protection against 5.5.5.3
mechanical damage, protection against 5.5.5.2
main
arrangement 5.5.1.1
earth electrode, connection 5.5.1.2
labelling 5.5.1.3
polarity 8.3.7.1, 8.3.7.2
protective
arrangement 5.5.2.1
circuits 5.5.2.2.1
distribution boards 5.5.2.2.3
earthing 5.5.2.2.2
resistance 5.5.1.4
switching and isolation
prohibited 2.3.2.1.2
eddy currents 3.9.10.2
Edison screw lampholders 4.5.1.2, 8.3.7.2
egress paths
switchboard locations 2.10.2.5
elastomeric insulation 3.4.2
electric fences 7.8.3.2
electric motors: *See* motors
electric shock
damp situations
prohibited protection measures 6.2.3
principles of wiring
general provisions 1.5.3.1
methods of 1.5.3.2
refrigeration rooms
prohibited measures 6.6.2.2
SELV, use 6.6.2.1
sanitization operations

auto login of Electrical Workers Licensing Group is licenced to temporarily download this document.
Electrical Workers Licensing Group may print this document but not more than 10% of the documents subscribed to may be held in printed form at any one time.

Copyright Standards New Zealand

prohibited measures 6.7.3.2
SELV, use 6.7.3.1
spa pools and tubs
prohibited measures 6.3.3.1
supplementary equipotential bonding 6.3.3.2
voltage gradients 6.3.3.3
swimming pools
prohibited measures 6.3.3.1
supplementary equipotential bonding 6.3.3.2
voltage gradients 6.3.3.3
electric vehicles (EV) 7.9, App P
***See also* socket-outlets**
charging station guidelines App P
cable safety App P6
other equipment App P5
periodic verification App P7
connectors App P5.1
permitted App P5.2
types App P5.3
definition 1.4.56
non-residential electrical installations 7.9.4
residential electrical installations
charging modes 7.9.3.1–7.9.3.4
socket-outlet and charging station guidelines App P
supply systems 7.9.2
electrical conduits: *See* conduits
electrical connections 3.7.1
aluminium conductors 3.7.2.1.2
common requirements 3.7.2.1.1
flexible cords 3.7.2.8
loosening 3.7.2.3
mechanical connection devices 3.7.2.4
mechanical stress 3.7.2.6
preparations for 3.7.2.2
soldered connections 3.7.2.7
stranded conductors, retention 3.7.2.5
electrical equipment 1.7
See also airconditioning; connecting electrical equipment; lifts; socket-outlets
adverse effects and interference 4.1.4
airconditioning systems 4.19
batteries 4.17
burns, protection against 4.2.3
capacitors 4.15
converters 4.12
cooking appliances 4.7
clearance from open surfaces 4.7.3
gas appliances 4.18.1.1
New Zealand connection 2.6.3.3.2, 4.7.2
switching device 4.7.1
switchboard location 2.10.2.5
damage from external influences 4.1.3
definition 1.4.50
duct heaters 4.11
earthing 5.5.3.5
fire hazard, prevention
emission of arcs or sparks, covering 4.2.2.4
enclosures 4.2.2.5
installation 4.2.2.1
New Zealand 4.2.2.7
protection from high temperatures 4.2.2.3
separation distances 4.2.2.6
spread of fire 4.2.2.6
storage of flammable materials 4.2.2.2
gas appliances 4.18
heat pump systems 4.19
heating cables 4.10, 6.2.4.5
additional protection 4.10.5
functional switches 4.10.4
isolating switches 4.10.3
RCDs 4.10.5
signs 4.10.6
lifts 4.20
liquid dielectrics 4.16
spreading, prevention 4.16.1
flashpoint not exceeding 250°C 4.16.2
motors 4.13
operating characteristics 2.2.4.1
current 2.2.4.3
effects on operator or other equipment 2.2.4.6
frequency 2.2.4.4
power 2.2.4.5
voltage 2.2.4.2
room heaters 4.9
functional switches 4.9.3
isolating switches 4.9.2
selection and installation of 1.7, 4.1.2
damp situations 1.7.4
installation work practice 1.7.2
selection 1.7.3
smoke alarms 4.6, 7.2.1.1
socket-outlets 4.4
thermal effects, protection against 4.2
transformers 4.14
water heaters 4.8
easing equipment, access to 4.8.2.1
isolating switch 4.8.2.3
terminals of protective devices, access to 4.8.2.1
unvented, protective devices 4.8.2.2

auto login of Electrical Workers Licensing Group is licenced to temporarily download this document.
Electrical Workers Licensing Group may print this document but not more than 10% of the documents subscribed to may be held in printed form at any one time.

Copyright Standards New Zealand

electrical fault
definition 1.4.51
electrical installations 2.3
***See also* safety services**
additional isolating switches
alternative supply 2.3.4.3
appliances and accessories 2.3.4.5
identification 2.3.4.4
outbuildings 2.3.4.1
submains and final subcircuits greater than 100 A 2.3.4.2
arc fault detection devices (AFDDs) 2.9
alterations 2.9.5
arrangement 2.9.4
characteristics App O2
final subcircuits, Australia 2.9.6
final subcircuits, New Zealand 2.9.7
general requirements App O3
load current rating 2.9.3
location, selection and installation App O4
rating 2.9.3
type 2.9.2
circuit arrangements 2.2.1.1
common neutral 2.2.1.3
electric vehicle charging circuits 2.2.1.4
origin of submains and final subcircuits 2.2.1.2
common control requirements
all systems 2.3.2.1.1
alternating current systems 2.3.2.1.2
direct current systems 2.3.2.1.3
conductors, *See* conductors
controlgear, selection and installation 2.1.2
definition 1.4.52
design of 1.6.1
circuit arrangement 1.6.5
maximum demand 1.6.3
supply characteristics 1.6.2
utilization voltage 1.6.4
domestic, definition 1.4.53
emergency switching devices 2.3.5.1
capabilities and operation 2.3.5.2
identification 2.3.5.4
installation 2.3.5.3
extra-low voltage: *See* extra-low voltage electrical installations
fault protection: *See* fault protection
fire and electric shock, national construction codes App E1
Australia App E2.1
New Zealand App E3.1
functional switching devices 2.3.7.1
control circuits 2.3.7.4
functions of 2.3.7.2
identification 2.3.7.3
high voltage: *See* high voltage electrical installations
isolation devices: *See* isolation devices
main switches: *See* main switches
maintenance shutdowns 2.3.6.1
maximum demand 2.2.2
multiple, definition 1.4.54
overcurrent protection: *See* overcurrent protection
overload protection: *See* overload protection
overvoltage protection: *See* overvoltage protection
RCDs: *See* residual current devices (RCDs)
reliability of supply 2.5.7.1
coordination of protective devices 2.5.7.2.1
general supply circuit discrimination (selectivity) 2.5.7.2.3
safety service circuit discrimination (selectivity) 2.5.7.2.2
residential, definition 1.4.55
selection and installation 2.1.2
short-circuit current protection: *See* short-circuit current protection
shutdown devices
identification 2.3.6.4
installation 2.3.6.3
switchgear, selection and installation 2.1.2
undervoltage protection
causes 2.8.1
protective devices 2.8.2
electrical separation 1.5.5.5, 7.4
arrangement of circuits 7.4.3
protection by 1.5.5.5
source of supply 7.4.2
supply to multiple items of equipment 7.4.6
supply to single item of equipment 7.4.5
switching devices 7.4.4
testing 7.4.8.1
equipotential bonding conductor continuity 7.4.8.4
multiple items of equipment 7.4.8.3
single items of equipment 7.4.8.2
variable speed drive (VSD) EMI filters 7.4.7

electrical supply
characteristics, determining 1.6.2
safety services 7.2.1.1

COPYRIGHT

auto login of Electrical Workers Licensing Group is licenced to temporarily download this document.
Electrical Workers Licensing Group may print this document but not more than 10% of the documents subscribed to may be held in printed form at any one time.

Copyright Standards New Zealand

shutting down 2.3.6.1
wiring systems exposed to fire 7.2.2.1
electricity converters 4.12.1
control 4.12.3
earthing 4.12.6
equipment connected to output 4.12.8
isolation switch
converters incorporating batteries 4.12.4.2
requirements 4.12.4.1
neutral continuity 4.12.7
overcurrent protection 4.12.5.1
RCDs 4.12.5.2.2
submain and final subcircuits 4.12.5.2.1
selection and installation 4.12.2
electricity distribution equipment
water features, prohibition near 6.4.4.8
electricity distributor
definition 1.4.57
electricity generation systems 7.3
basic and fault protection 7.3.3.1
connected electrical equipment 7.3.7
connections
alternative supplies 7.3.8.1.1
grid-connected inverter systems 7.3.8.2.1–7.3.8.2.3
stand-alone power systems 7.3.8.3.1–7.3.8.3.3
switching 7.3.8.1.2
control 7.3.3
damp situations 6.2.4.7
earthing 7.3.6
isolation switches
batteries incorporated into system 7.3.4.2
requirements 7.3.4.1
overcurrent protection 7.3.5.1
circuit protection 7.3.5.2.1
RCDs 7.3.5.2.2
selection and installation 7.3.2
water features 6.4.4.7
electromedical treatment areas 7.8.2.2
ELV halogen lamps 4.2.2.3
emergency exits
switchboards 2.10.2.2
emergency lifts: *See* lifts
***See also* safety systems**
emergency switching devices 2.3.5.1
capabilities and operation 2.3.5.2
identification 2.3.5.4
installation 2.3.5.3
enclosed equipment, degrees of protection App G
enclosed wiring systems App H3
enclosure of cables
insulated and sheathed 3.10.1.2
insulated and unsheathed 3.10.1.1
wiring enclosures
bending 3.10.3.4
cable trunking 3.10.3.9
changes to 3.10.2.2
continuity 3.10.3.3
direct sunlight 3.10.3.7
entry of water 3.10.2.3
installation 3.10.3.1
passage for conductors 3.10.3.5
provision for expansion 3.10.3.8
support 3.10.3.2
terminations 3.10.3.6
types 3.10.2.1
enclosures
definition 1.4.58
protection by 1.5.4.4
energized
definition 1.4.59
energy efficiency
National Construction Code App E2.3.4
equipment wiring 4.3.6
equipotential bonding 5.6.1
arrangement 5.6.2.1
baths and showers 5.6.2.5
conductive cable sheaths and wiring enclosures 5.6.2.4
conductive water piping 5.6.2.2
other conductive piping systems 5.6.2.3
spa pools and tubs 5.6.2.6.1–5.6.2.6.5
swimming pools 5.6.2.6.1–5.6.2.6.5
telephone and telecommunication earthing systems 5.6.2.7
conductors 5.3.4
conductive water piping 5.6.2.2, 5.6.2.3, 5.6.2.5
definition 1.4.60
earth fault-loop impedance 5.7.5
selection and installation 5.6.3.1
supplementary, where required 6.3.3.2
swimming pools 5.6.2.6.1–5.6.2.6.3
wiring identification 3.8.1
escalators 7.2.1.1
evacuation equipment: *See* safety services
excessive temperatures 1.5.1
explosion protection systems 5.8

auto login of Electrical Workers Licensing Group is licenced to temporarily download this document.
Electrical Workers Licensing Group may print this document but not more than 10% of the documents subscribed to may be held in printed form at any one time.

Copyright Standards New Zealand

explosive atmospheres 1.5.1, 7.8.2.18
definition 1.4.61
explosive gas: *See* hazardous areas
exposed conductive parts
consumer mains and submains 5.5.3.5
earthing 5.4.1.1
connections 5.5.6.2
protective 5.2.1
earthing, constructional component 5.5.6.2
equipotential bonding 1.4.60
luminaires 5.4.4
separated circuits 7.4.5
submersible pumps 5.4.7
unprotected consumer mains 5.5.3.5
external heat sources
wiring systems, influence on 3.3.2.2
external influences
ambient temperature 3.3.2.1
cable joints 3.7.3
circuit arrangements App B2
connection points
electrical vehicles App P3.2
controlgear 2.1.1
corrosive or polluting substances 3.3.2.5
current carrying capacity 3.4.1
earthing arrangements 5.1.2
earthing conductors 5.3.3.1.1
external heat sources 3.3.2.2
fauna 3.3.2.10
fire barriers 3.9.9.3
flora 3.3.2.9
hazardous areas 3.3.2.12
inspections 8.2.2
installation of equipment 1.7.2
luminaires 4.5.2.1
mechanical damage 3.3.2.6
mechanical stresses 3.3.2.8
protection 1.5.14
barriers 1.5.4.4
electric shock 1.5.3.2
residual current devices 2.6.3.2.3
selection of equipment 1.7.1, 4.1.2, 4.1.3, App C3
solar radiation (direct sunlight) 3.3.2.11
solid foreign bodies 3.3.2.4
switchgear 2.1.1
thermal insulation 3.3.2.13
vibration 3.3.2.7
water or high humidity 3.3.2.3
wiring systems 3.1.2, 3.3
fixing and supporting 3.9.3
installation 3.9.2
extra-low voltage electrical installations 7.5
application 7.5.2
connecting devices 7.5.10
control 7.5.8
overcurrent protection
devices 7.5.9.1
omission 7.5.9.2
PELV systems: *See* protected extra-low voltage systems (PELVs)
SELV systems: *See* separated extra-low voltage systems (SELVs)
voltage drop in conductors 7.5.7
wiring systems 7.5.11.1
aerial conductors 7.5.11.2
underground conductors 7.5.11.3
extraneous conductive part
definition 1.4.63
extraneous conductive parts
conductive pool structures 5.6.2.6.2
supplementary equipotential bonding 1.5.5.3

F

fault protection 1.5.5.1, 2.4
abnormal voltages 1.5.11
automatic disconnection of supply 1.5.5.3, 2.4.2
class II equipment 1.5.5.4
devices
auto-reclose devices 2.4.4
types 2.4.3
earth fault currents 1.5.10
electrical separation 1.5.5.5
external influences 1.5.14
extra-low voltage systems 1.5.7
fire 1.5.12
injury from mechanical movements 1.5.13
methods 1.5.5.2
overcurrents 1.5.9
RCDs 1.5.6.2
thermal effects, from 1.5.8
fault-current limiter
definition 1.4.64
fauna
wiring systems, influence on 3.3.2.10
ferromagnetic enclosures 3.9.10.2
festoon lighting 4.5.1.3
film sites 7.8.3.10
final subcircuits App C5.2
electric vehicles 7.9.3.3, 7.9.3.4
isolating switches 2.3.4.2
maximum demand App C2.5
origin of 2.2.1.2
overcurrent protection 4.12.5.2.1

COPYRIGHT

auto login of Electrical Workers Licensing Group is licenced to temporarily download this document.
Electrical Workers Licensing Group may print this document but not more than 10% of the documents subscribed to may be held in printed form at any one time.

Copyright Standards New Zealand

pump rooms 7.2.5.5
RCD protection 2.6.2.4
fire
protection against 1.5.12, 2.6.2.3
arcing faults 2.9
selection of materials 3.9.9
RCDs, protection against 2.6.2.3
switchboards, protection 2.10.7
fire and smoke detection alarms 7.2.6.1
***See also* air-handling systems**
warning and intercom systems
interposing switches 7.2.6.3
segregation of cables 7.2.6.2.2
wiring systems 7.2.6.2.1
fire control equipment 7.2.5.1
fire-pump motors
control circuits 7.2.5.6.4
isolating switches 7.2.5.6.1
overcurrent protection 7.2.5.6.2
overtemperature protection 7.2.5.6.3
interposing switches 7.2.5.4, 7.2.6.3
pump rooms 7.2.5.5
segregation of cables 7.2.5.2.2
switchgear 7.2.5.3
wiring systems 7.2.5.2.1
fire detection, warning, extinguishing equipment: *See* safety services
fire exits
switchboard locations 2.10.2.5
fire hazard, prevention
***See also* arc fault detection devices**
emission of arcs or sparks, covering 4.2.2.4
enclosures 4.2.2.5
installation of electrical equipment 4.2.2.1
protection from high temperatures 4.2.2.3
spread of fire 4.2.2.6
storage of flammable materials 4.2.2.2
thermal insulation in New Zealand buildings 4.2.2.7
fire hydrant booster pumps 7.2.5.1
fire management systems
electricity supply system 7.2.2.3.2
fire mode
definition 1.4.65
fire pumps: *See* fire control equipment
fire safety
National Construction Code App E2.3.2
fire-hose reels
switchboard locations 2.10.2.5
fire-rated barriers
installation of wiring through 3.9.9.3
fire-resistance level (FRL) 7.2.1.2, 7.2.4.6
fire-sprinklers
switchboard locations 2.10.2.5
fixed appliances
refrigeration rooms 6.6.3.5
fixed water containers 6.2.1, 6.2.2.2
flammable materials
lamps near 4.5.2.2
flexible cords 3.9.7.4
arc fault detectors App O1
circuit arrangements 7.4.3
colours 3.83.3
connections 3.7.2.8
definition 1.4.40
earthing 5.5.3.2, 5.5.3.3
earthing conductors 5.3.3.4
copper conductor size Table 5.1
equipment wiring 4.3.6
external heat sources 3.3.2.2
fountains 6.4.4.2
installation couplers 3.7.4, 4.3.2.2
installation wiring 3.9.7.4
socket-outlets 4.3.4
joints 3.7.2.8
pendant socket-outlets
switches 4.4.4.4
separated circuits 7.4.6
floor and ceiling heating systems 7.8.2.17
flora
wiring systems, influence on 3.3.2.9, 4.1.3
fluorescent lamps App C2.3.1
fountains: *See* water features
four-core earth cables App C6.3
freezers: *See* refrigeration rooms
functional earthing 5.2.2
conductors 5.3.7
definition 1.4.66
functional switching devices 2.3.7.1
control circuits 2.3.7.4
functions of 2.3.7.2
identification 2.3.7.3
functional unit
definition 1.4.67
fuse-combination units 2.5.2
fuse-links 2.5.2
fuses
arcing, protection against App O1
definition 1.4.68

COPYRIGHT

auto login of Electrical Workers Licensing Group is licenced to temporarily download this document.
Electrical Workers Licensing Group may print this document but not more than 10% of the documents subscribed to may be held in printed form at any one time.

Copyright Standards New Zealand

discrimination (selectivity) 2.5.7.2.3
final subcircuit resistance 8.3.9.3
functional switching, prohibited 2.3.7.2
general supply circuit
discrimination 2.5.7.2.3
neutral conductors, prohibited in 2.5.1.1
overcurrent protection App B3.2.2.3
overload protection 2.5.2, 2.5.3.1
rating 3.4.4, App F1.2.4
semi-enclosed rewireable 2.4.3, 2.5.2
short circuit protection devices 2.5.2
time/current curves App B4.5

G

gas appliances 4.18.1.1
cylinders with heavier-than-air gases
hot particles and surfaces 4.18.2.2
ignition sources 4.18.2.1
cylinders, indoor, New Zealand 4.18.3
electrical equipment installation, New Zealand 4.18.2.3
isolation switch
Australia 4.18.1.2
New Zealand 4.18.1.3
relief vent terminal 4.18.4
reticulated lighter-than-air systems, New Zealand 4.18.5
gas hazards*: See* hazardous areas
generating sets 7.2.2.3.1, 7.3.4.1, 7.8.2.10
grid-connected inverter systems 7.3.8.2.1
connection 7.3.8.2.3
switching 7.3.8.2.2

H

hard-drawn bare conductors 3.12.1
harmonic currents
neutral conductors 3.5.2
overcurrent protection 4.12.5.1
overprotection 7.3.5.1
hazardous areas 7.7, 7.8.2.17
classification 7.2.2.2
hazard reduction/elimination 7.7.2.3
responsibility for 7.7.2.1
combustible dust 7.7.2.1
electrical equipment
installation 7.7.2.4.2
selection 7.7.2.4.1
explosive gas or vapour 7.7.2.1
switchboard locations 2.10.2.5
wiring systems 3.3.2.12
heaters
***See also* water heaters**
duct 4.11
radiant 4.2.2.3
room 4.9.1
functional switches 4.9.3
isolating switches 4.9.2
heat pump systems
isolating switches 4.19
heating cables 4.10.2, 6.2.4.5
additional protection 4.10.5
functional switches 4.10.4
isolating switches 4.10.3
RCDs 4.10.5
signs 4.10.6
high temperatures 4.2.2.3
high voltage electrical installations 7.6, 7.8.2.9
Australia 7.6.2.1
New Zealand 7.6.2.2
hoists 7.8.2.7
homecare medical services
power outages App M1, M2
horticultural premises: *See* sanitization operations
hosing-down areas: *See* sanitization operations
hospital emergency power supplies 7.8.3.3
hot water appliances 4.8.1–4.8.2.3
HRC fuses: *See* fuses

I

imperial-to-metric cable size conversion App I3
impulse voltage 2.3.2.2.1
surge protection devices (SPDs) App F1.2.3
incandescent lamps App C2.3.1
information technology installations 5.8
informative
definition 1.4.69
infra-red lamps 4.2.2.3
ingress protection (IP)
barriers 1.5.4.4
definition 1.4.70
electrical accessories 4.1.3
rating App G
overhangs 4.1.3
placing out of reach 1.5.4.6
injury from mechanical movement
protection against 1.5.13
inspections: *See* verification
installation couplers 3.7.4

COPYRIGHT

Copyright Standards New Zealand

auto login of Electrical Workers Licensing Group is licenced to temporarily download this document.
Electrical Workers Licensing Group may print this document but not more than 10% of the documents subscribed to may be held in printed form at any one time.

connecting cables 4.3.2.2
definition 1.4.71
extra low voltages 7.5.10
freestanding cooking appliances 4.7.2
socket-outlets 4.3.3.2
wiring 4.3.3.1
installation of wiring systems 3.9
change of direction 3.9.6
circulating and eddy currents, limiting
cables for a.c. circuits-electromagnetic effects 3.9.10.2
cables with non-ferrous metal sheathing 3.9.10.3
consumer mains
protected 3.9.7.1.1
unprotected 3.9.7.1.2
electromagnetic interference, minimization of 3.9.11
fire, minimization of 3.9.9.1
penetration of fire barriers 3.9.9.3
precautions 3.9.9.2
flexible cords 3.9.7.4
insulated and sheathed cables 3.9.7.2
low voltage track systems 3.9.7.5
mechanical damage, protection
against 3.9.4.1
near building surfaces 3.9.4.2
under wall lining or roofing material 3.9.4.3.1–3.9.4.3.4
methods 3.9.2
mineral insulated metal sheathed (MIMS) cable 3.9.7.3
mutual detrimental effects, preventing 3.9.8.1
common enclosure/cable 3.9.8.2.1
proximity to non-electrical services 3.9.8.4
segregation 3.9.8.2.2
segregation, different voltage levels 3.9.8.3
support and fixing 3.9.3.1
disturbed locations 3.9.3.3.1, 3.9.3.3.2
suspended ceilings 3.9.3.2
under-carpet wiring systems 3.9.7.6
instantaneous water heaters App C, Table C1, Table C2
insulated
definition 1.4.72
insulated cables 3.4.2, 3.9.7.1.2, 3.9.7.2, 3.10.1.1, 3.10.1.2
limiting temperature Table 3.2
insulation
acoustic 4.2.2.6
aerial conductors 3.12.2.1
basic 1.5.4.3
cross-linked polyethylene 3.4.2
earthing conductors 5.3.2.4
elastomeric 3.4.2
overvoltage protection 2.7.2
protection by 1.5.4.3
reinforced 1.4.32
resistance 8.3.6.1
ELV testing 7.5.12.1
method 8.3.6.2
results 8.3.6.3
values 7.4.8.1
thermal insulation 3.3.2.13
UV-resistant 3.3.2.11
insulation system
definition 1.4.73
interlocked equipment App C2.5.4
internal arcing fault currents
switchboards 2.5.5.1
harmful effects, limitation of 2.5.5.3
reducing probability of 2.5.5.2
internal separation
switchboards App K6.2
interposing switches
air-handling systems 7.2.7.2.3
evacuation equipment 7.2.8.3
fire detection/alarm systems 7.2.6.3
fire pumps 7.2.5.4
lift switchboards 7.2.9.4
inverters 7.3.1, 7.8.2.11
d.c. circuit protection guide App Q9
grid-connected 7.3.8.2.1–7.3.8.2.3
isolated
definition 1.4.74
isolated supply: *See* electrical separation
isolating switches
additional to main switches 2.3.4
outbuildings 2.3.4.1
airconditioners 4.19
alternative supply 2.3.4.3
appliances and accessories 2.3.4.5
capacitors 4.15
cooking appliances 4.7
electric heating cables for floors and ceilings and trace heating appliances 4.10
electricity converters 4.12
electricity generation systems 7.3
final subcircuits 2.3.4.2
fire-pump motors 7.2.5.6.1
gas appliances and equipment 4.18
heating cables 4.10.3
lifts 4.20

auto login of Electrical Workers Licensing Group is licenced to temporarily download this document.
Electrical Workers Licensing Group may print this document but not more than 10% of the documents subscribed to may be held in printed form at any one time.

Copyright Standards New Zealand

motors 4.13
room heaters 4.9.2
safety services 7.2
socket-outlets 4.4
submains and final subcircuits greater than 100 A 2.3.4.2
water heaters 4.8.2.3
isolation devices 1.5.2
controlgear
identification 2.3.2.2.2
requirements 2.3.2.2.1
d.c. system App Q6
definition 1.4.75

J

joints
aerial conductors 3.7.2.9.1, 3.7.2.9.2, 3.12.7
aluminium conductors 3.7.2.1.2
cables 3.7.3
crimp 3.7.2.3.2
flexible cords 3.7.2.8
prohibited 3.7.2.9.2

L

labelling
earthing conductor 5.5.1.3
heating cables 4.10.6
high voltage installations 7.6.3
lift circuits 4.20.3
main switch supplementary supplies 2.3.3.5
socket-outlets 4.4.4.3
surge protection devices App F1.2.2
lamp
definition 1.4.76
lampholders
Edison screw 4.5.1.2, 8.3.7.2
festoon lighting 4.5.1.3
refrigeration rooms 6.6.3.4.2
lamps
high temperature 4.2.2.3
laundries 6.2.4.2
Leclanché battery 7.5.9.2
lifts 7.8.2.8
***See also* safety systems**
definition 1.4.77
emergency
Australia 7.2.9.1.1
control and protection 7.2.9.2
interposing switches 7.2.9.4
New Zealand 7.2.9.1.2
segregation of cables 7.2.9.3.2
switchgear 7.2.9.5
wiring systems 7.2.9.3.1
motor-room-less (MRL) 7.2.10.1
segregation of cables 7.2.10.4.2
switchboards 7.2.10.2
switchgear 7.2.10.3
wiring systems 7.2.10.4.1
WS classification 7.2.2.1
lighting
equipotential bonding 5.6.1
protection 7.8.3.4
surge protection devices App F1
lighting equipment and accessories
lampholders
Edison screw 4.5.1.2, 8.3.7.2
festoon lighting 4.5.1.3
location 4.5.1.1
lamps and luminaires 4.5.2.1
near flammable materials 4.5.2.2
recessed luminaires 4.5.2.3.1–4.5.2.3.5
suspended ceilings 4.5.2.4
links
functional switching, prohibited 2.3.7.2
overcurrent 2.5.2
live
definition 1.4.78
live part
definition 1.4.79
liquid dielectrics
in electrical equipment 4.16
load current
domestic installations App C2.3.1
non-domestic installations App C2.4.1
parallel multi-core cables 3.4.3
load groups
domestic applications App C2.3
non-domestic installations App C2.4
loose busbars App K9
low voltage switchgear 7.8.2.12
low voltage track systems 3.9.7.5
luminaires
damp situations 6.2.4.4
definition 1.4.80
earthing 5.4.4
recessed
classification 4.5.2.3.4, 4.5.2.3.5
installation 4.5.2.3.3
refrigeration rooms 6.6.3.4.1
swimming pools and spas 6.3.4.5
water features 6.4.4.5

Copyright Standards New Zealand

auto login of Electrical Workers Licensing Group is licenced to temporarily download this document.
Electrical Workers Licensing Group may print this document but not more than 10% of the documents subscribed to may be held in printed form at any one time.

auto login of Electrical Workers Licensing Group is licenced to temporarily download this document.
Electrical Workers Licensing Group may print this document but not more than 10% of the documents subscribed to may be held in printed form at any one time.

M

main earthing conductor 5.3.1
aluminium 5.3.2.1.2
connection
earth electrode 5.5.1.2
switchboard 5.3.4
cross-sectional area 5.3.3.2
definition 1.4.81
labelling 5.5.1.3
resistance 5.5.1.4
main switches 2.3.3
***See also* safety services**
control of electrical installations 2.3.3.2
definition 1.4.82
identification 2.3.3.5
location and operation 2.3.3.4
number of 2.3.3.3
remote control 2.3.3.6
mains: *See* consumer mains and submains
maintenance shutdowns 2.3.6
protection against arcing faults 2.5.5.1
marinas 7.8.2.4
maximum demand
after diversity App C2.1
circuit arrangements App C2
consumer mains and submains 2.2.2
calculation App C2.2
cooking appliances App C2.5.3
determining 1.6.3, 2.2.2
domestic installations
calculation, examples App C2.3.2
method App C2.3.1
electric vehicles socket-outlets App P2
final subcircuits App C2.5.1
calculation, commercial and light-industrial applications App C2.4.3
calculation, examples App C2.4.2
calculation, switchboard diversity App C2.4.4
method App C2.4.1
non-domestic installations App C2.4
welding machines App C2.5.2
mechanical damage
wiring systems 3.3.2.6
medical treatment areas 7.8.2.2

MEN connection system 5.3.5.1
identification 5.3.5.3
size 5.3.5.2
MEN earthing system 5.1.3, 5.3.1
definition 1.4.83
earth fault-loop
elements of App B4.4
impedance, calculation App B4.5
impedance, measurement App B4.6
maximum circuit lengths App B.5
metal waste 1.4.63
metallized papers 1.4.63
mineral insulated metal sheathed (MIMS) cable 3.4.2, 3.9.7.3, 3.16
mini-hydro turbine 7.3.1
miniature overcurrent circuit-breakers (MCBs) 5.7.4, App O1
mobile medical facilities 7.8.2.16
motor-generator sets 4.12.1
motor-room-less lifts (MRLs) 4.20.4.1
switchboards 4.20.4.2
switchgear 4.20.4.3
motors
injury from mechanical movement, protection
isolation switches, rating 4.13.1.2
restarting or reversal 4.13.1.4
starting-and-stopping devices 4.13.1.3
switching devices 4.13.1.1
overload, protection against 4.13.2
overtemperature, protection
against 4.13.3.1
devices 4.13.3.3
prohibited 4.13.3.2
moving walkways 7.2.1.1
multi-core cables
earthing conductors 5.3.3.4
prohibited joints 3.7.2.9.2
multi-core flexible cord 5.3.3.4
multiple earthed neutral system: *See* MEN earthing system

N

National Construction Codes, Australia App E
building classification App E2.2
energy efficiency App E2.3.4
fire safety App E2.3.2
general App E2.1
safety, health and amenity App E2.3.3
sustainability App E2.3.4
neutral
bars: *See* terminal bars
conductors
a.c. system, isolation 2.3.2.1.2
colouring 3.8.3.3
common 2.2.1.3, 2.10.5.5
continuity 4.12.7

Copyright Standards New Zealand

cross-sectional size 3.5.2
definition 1.4.84
fuses, prohibited 2.5.1.1
identification 3.8.1
not operating in parallel with earth conductors 7.3.8.1.1
polarity 8.3.7.1, 8.3.7.2
size 3.5.2
switchboards 2.10.5.4
neutral earthed system
definition 1.4.85
neutral-return path 5.7.3, App B4.4
neutral-screened cables 3.12.1, 3.12.4
prohibited joints 3.7.2.9.2
New Zealand Building Code App E3.1
building consents App E3.3
non-hygroscopic trunking 3.10.3.9
non-IC luminaire 4.5.2.3.4
non-polarized switchgear App Q4.2
normative
definition 1.4.86

O

obstacles
definition 1.4.87
protection by 1.5.4.5
off load isolators 2.3.2.2.1
open cooking surfaces
socket-outlets and switches, clearances 4.7.3
switching devices 4.7.1
out of reach
protection by 1.5.4.6
outbuildings
combined, definition 1.4.89
earthing 5.5.3.1, 5.4.6.1
individual, definition 1.4.88
isolating switches 2.3.4.1
main switches 7.2.4.5
outdoor sites
gas cylinders
hot particles 4.18.2.2
ignition sources 4.18.2.1
NZ standards 4.18.2.3
heavy conditions 7.8.3.1
overcurrent protection 1.5.9, 2.5, App B3
consumer mains 2.5.1.2
d.c. system App Q6
definition 1.4.90
electric vehicle connectors App P4.2
electricity converters 4.12.5.1
electricity generation systems 7.3.5.1
circuit protection 7.3.5.2.1
RCDs 7.3.5.2.2
extra-low voltage electrical installations
devices 7.5.9.1
omission 7.5.9.2
fire-pump motors 7.2.5.6.2
protective device, coordination with short-circuit devices 2.5.6.1, 2.5.6.2
protective device, omission for safety reasons 2.5.1.4
submains and final subcircuits, arrangements 2.5.1.3
surge protective devices (SPDs) App F1.2.4
overload protection 2.5.2, App B3
conductors and protective devices 2.5.3.1, App B3.2
device, omission of 2.5.3.4
position of devices 2.5.3.2, 2.5.3.3
overtemperature protection
electric motors 4.13.3
fire-pump motors 7.2.5.6.3
lamps 4.5.2.3.3
water heaters, unvented 4.8.2.2
overvoltage protection 2.7
AFDDs App O4.4
categories App K6.4
causes of overvoltage 2.7.1
insulation 2.7.2
separation 2.7.2
circuits at different voltages 1.5.11.2
protective devices 2.7.3
surge protection devices App F1
switchboards App K6.4
voltage disturbances 1.5.11.3

P

parallel arcing faults App O1
parallel conductors 3.4.3
voltage drop 3.6.3
parallel connections
capacitors and appliances 4.15.3.2
parallel multi-core cables 3.4.3
parallel single core cables 3.9.11
parallel-webbed insulated cables 3.12.1
prohibited joints 3.7.2.9.2
PELV: *See* protected extra-low voltage systems (PELVs)
PEN conductors: *See* protective earth and neutral (PEN)
pendant socket-outlets 4.3.6
flexible cords 3.9.7.4

auto login of Electrical Workers Licensing Group is licenced to temporarily download this document.
Electrical Workers Licensing Group may print this document but not more than 10% of the documents subscribed to may be held in printed form at any one time.

Copyright Standards New Zealand

switches 4.4.4.4.
periodic
inspection and testing 8.1.3
verification 7.8.3.8, App P7
phase sequence, socket-outlets 4.4.5, 8.3.7.2
photovoltaic (PV) arrays 7.3.1, 7.3.2, 7.8.2.14
pin-type insulators 3.12.5.2
plug-in hybrid road vehicles (PHRVs) App P1.1
plugs
definition 1.4.91
emergency switching, prohibited 2.3.5.2
gas appliances 4.18.1
inaccessible socket-outlets 4.3.3.2
PELV and SELV 4.4.1.2, 7.5.10
ratings App P5.2
socket-outlet location 4.4.2
three-pin/flat-pin 4.4.5
point
attachment, definition 1.4.93
entry, definition 1.4.94
of supply, definition 1.4.95
in wiring, definition 1.4.92
polarity
conductors
active 8.3.7.1, 8.3.7.2
neutral 8.3.7.1, 8.3.7.2
testing
purpose 8.3.7.1
results 8.3.7.2
polarized socket-outlets 4.4.5
polarized switchgear App Q4.1
poles
aerial conductors
attachments to buildings or structures App D3
general requirements App D2
minimum sizes App D1
using tables to determine size App D4
polyethylene insulation 3.4.2
polymeric insulated cables 3.4.2, 3.12.1, 7.4.8.1
pools: *See* swimming pools
posts: *See* poles
power outages, assisted living and homecare medical services App M
arrangements App M2
power switchgear and controlgear (PSC) App K3.2, K8.1
principles of wiring 1.5
abnormal voltages, protection against 1.5.11.1
circuits operating at different voltages 1.5.11.2
different circuits and installations 1.5.11.5
voltage disturbances and electromagnetic influences 1.5.11.3
voltage in unused conductors 1.5.11.4
basic protection 1.5.4.1
barriers or enclosures 1.5.4.4
insulation 1.5.4.3
methods of 1.5.4.2
obstacles 1.5.4.5
placing out of reach 1.5.4.6
RCDs 1.5.6.1
control and isolation 1.5.2
dangers and damage, protection against 1.5.1
earth fault currents, protection against 1.5.10
electric shock, protection against
general provisions 1.5.3.1
methods of 1.5.3.2
external influences, protection against 1.5.14
extra-low voltage, basic and fault protection 1.5.7
fault protection 1.5.5.1
automatic disconnection of supply 1.5.5.3
class II equipment 1.5.5.4
electrical separation 1.5.5.5
fire, protection against 1.5.12
injury from mechanical movement, protection against 1.5.13
overcurrent, protection against 1.5.9
RCDs, additional protection
basic protection 1.5.6.1
fault protection 1.5.6.2
where required 1.5.6.3
thermal effects, protection against 1.5.8
prospective earth-fault current 7.3.5.2.1
prospective short-circuit current 7.3.5.2.1, F1.2.4
prospective touch voltage App B4.3
protected extra-low voltage systems (PELVs)
aerial conductors 7.5.11.2
basic and fault protection 1.5.7
circuit arrangements 7.5.6
connecting devices 7.5.10
definition 1.4.96

auto login of Electrical Workers Licensing Group is licenced to temporarily download this document.
Electrical Workers Licensing Group may print this document but not more than 10% of the documents subscribed to may be held in printed form at any one time.

Copyright Standards New Zealand

earthing contacts 4.4.3, 7.5.10
electrical equipment installations 6.2.4.5
fountains and water features Table 6.3
luminaries 6.2.4.4, 6.3.4.5, 6.4.4.5
overcurrent protection 7.5.9
plug and socket-outlets 4.4.1.2, 6.2.4.2, 6.3.4.3
requirements 7.5.1, 7.5.2
separation requirements 7.5.4
supply sources 7.5.3
swimming pools Table 6.2
switches 7.5.8
testing 7.5.12.3, 8.3.3.2
protection
against abnormal voltages 1.5.11
against arcs 2.5.5
fire hazards 2.9
against burns 4.2.3
against damage 1.5.1
against dangers 1.5.1
against earth fault currents 1.5.10
against electric shock 1.5.3, 6.2.3, 6.3.3, 6.4.3.2.2
dielectric tests App K6.7
hosing down operations 6.7
refrigeration rooms 6.6
saunas 6.5
against external influences 1.5.14
against faults 1.5.5, 2.4
electricity generation systems 7.3.3.1
against fire spread 1.5.12
against injury
mechanical movements 1.5.13, 4.13.1
against mechanical damage 3.3.2.6
cables, suspended ceilings 3.9.3.2
earthing arrangements 5.5.1.2
earthing conductors 5.5.5.1-5.5.1.3
switches 7.2.4.3
against moisture 5.4.7
against thermal effects 1.5.8, 4.1.2, 4.2
against overcurrents 1.5.9, 2.5, 4.12.5
electricity generation systems 7.3.3.1
extra-low voltage circuits 7.5.9
fire pump motors 7.2.5.6.2
against overload 2.5.2
currents 2.5.3
electric motors 4.13.2
against overtemperature 4.13.3
fire pump motors 7.2.5.6.3
against short circuit currents 2.5.2, 2.5.4, 3.9.7.1.2
against undervoltage 2.8
basic
barriers or enclosures 1.5.4.4
definition 1.4.97
insulation 1.5.4.3
methods 1.5.4.2
obstacles 1.5.4.5
reach 1.5.4.6
requirements 1.5.4.1
by automatic disconnection 2.4.2, 5.7.1
device types 2.4.3
by device
arrangements 2.6.2.1
coordination 2.5.6, 2.5.7.2
by earthing 5.2.1, 5.3.1
conductors 5.3.3
by electrical separation 7.1.2, 7.4
by extra low voltage 1.5.7
by fault current limiters 7.2.3.5
by insulation 2.7.2
by protective devices 2.7.3
by residual current devices 1.5.6, 2.6, 2.6.3
by wiring enclosures 3.10.2
circuit protection guide App B
d.c. circuits App Q
damp situations 6.1.2
emergency lifts 7.2.9.2
enclosed equipment App G
fault, definition 1.4.98
from lightning 7.8.3.4
from water 3.9.9.3, 6.2.1, 6.3.1, 6.4.1
hazardous areas 7.7
heating cables 4.10.5
high voltage installations 7.6.3
in damp situations 1.7.4
in hot water or steam appliance 4.8
luminaries 6.4.4.5
MIMS cables 3.9.7.3
socket-outlets 4.4.2.2
subcircuits 2.6.2.4
surge protection devices App F
through structural members 3.9.4.3.2, 3.9.4.4
underground wiring 3.11
protective conductors
electronic vehicles App P4.3
protective devices: *See also* protection; short-circuit current protection; surge protective devices (SPD)
earthing systems 5.7.4
internal arcing 2.5.5.3
coordination with conductors 3.4.4
overvoltage protection 2.7.3
ratings App I2
switchboards 2.10.1
switching functions 2.4.2
undervoltage protection 2.8.2
protective earth and neutral (PEN)

COPYRIGHT

auto login of Electrical Workers Licensing Group is licenced to temporarily download this document.
Electrical Workers Licensing Group may print this document but not more than 10% of the documents subscribed to may be held in printed form at any one time.

Copyright Standards New Zealand

conductors 3.5.2
a.c. systems 2.3.2.1.2
continuity testing 8.3.5.1
earth shield return systems 3.16
electric vehicles, supply 7.9.2
isolation 1.5.2
MEN earthing systems 5.1.3
outbuildings 5.5.3.1
polarity testing 8.3.7.2
resistance measurement 8.3.9.2.3
size 3.5.2
terminals 2.10.4.2
testing 8.3.3.1
definition 1.4.99
protective earthing 5.2.1
conductors
cross-sectional area 5.3.3.1.1
definition 1.4.100
switching, prohibited 4.12.6
types 5.3.2.2
pump rooms
final subcircuits 7.2.5.5
pumps
fire-pump motors: *See* fire control equipment
heat systems 4.19
submersible 4.13.3.2, 5.4.7

Q

quick recovery water heaters
maximum demand App C, Table C1

R

radial branched distribution App B2
radiant heaters 4.2.2.3
radio frequency interference (RFI) 5.2.2, 5.8
rated current
switchgear and controlgear App K6.8
rated diversity factor (RDF) App K6.8
rated primary current App C2.5.2.1
RCD: *See* residual current devices (RCDs)
reactance App B4.3

recessed luminaire barriers App A
classification 4.5.2.3.4
installation 4.5.2.3.3
warning signs 4.5.2.3.2
rechargeable energy storage systems (RESSs) App P1.1
recreational boats 7.8.2.4
rectifiers 2.5.4.5
referenced documents App A
refrigeration rooms 6.6
electric shock, protection against
prohibited measures 6.6.2.2
SELV, use 6.6.2.1
electrical equipment, selection and installation
degree of protection required 6.6.3.1
door seals, heating elements 6.6.3.6
fixed appliances 6.6.3.5
lampholders 6.6.3.4.2
luminaires 6.6.3.4.1
motors 6.6.3.5
sealing compounds 6.6.3.2.3
socket-outlets 6.6.3.3
switchboards 6.6.3.7
switches 6.6.3.3
wiring systems 6.6.3.2
switchboard locations 2.10.2.5
reinforced concrete 1.4.63
reinforced insulation 1.4.32
reliability of supply 2.5.7.1
coordination of protective devices 2.5.7.2.1
general supply circuit discrimination (selectivity) 2.5.7.2.3
safety service circuit discrimination (selectivity) 2.5.7.2.2
renewable energy sources 7.3.1
repairs
definition 1.4.101
electrical installations 1.9.3.1
residual current breaker with overload (RCBO) App M2
residual current devices (RCDs) 2.6
***See also* socket residual current device (SRCD)**
additional protection 1.5.6, 2.6.3.1
arc fault protection App O1
arrangement 2.6.2.1, 2.6.2.4
Australia 2.6.3.2
automatic disconnection 2.4.2
devices 2.4.3
basic protection 1.5.4.2, 1.5.6.1
definition 1.4.102
earth leakage currents 1.5.6.3
electric vehicle
connectors App P4.1
non-residential charging facilities 7.9.4
residential charging facilities 7.9.3
electrical separation 7.4.2
electricity converters 4.12.5.2.2

auto login of Electrical Workers Licensing Group is licenced to temporarily download this document.
Electrical Workers Licensing Group may print this document but not more than 10% of the documents subscribed to may be held in printed form at any one time.

Copyright Standards New Zealand

electricity generation systems 7.3.5.2.2, 7.3.8.1.2
earth sheath return systems 3.16
fault protection 1.5.6.2, 1.5.5.3, 1.5.5.4, 1.5.6.2
fire pumps 7.2.5.5
functional earthing 5.2.2
heating cables 4.10.5
inverters 4.12.5.2.2
load current rating 2.6.2.1
mechanical protection device wiring systems 3.9.3.3.2
New Zealand 2.6.3.3
overcurrent protection, electricity generation systems 7.3.5.2.2
protection by 2.6.3
basic 1.5.6.1
fault 1.5.6.2
where required 1.5.6.3
protection, where required 1.5.6.3
refrigeration rooms 6.6.3.6
required usage 1.5.6.3
saunas 6.5.3.3
selection 2.6.2.2
Australia 2.6.2.2.2
fault current to earth 4.12.5.2.2
fire, protection against initiation 2.6.2.3
fixed settings 2.6.2.2.1
New Zealand 2.6.2.2.3
socket-outlets 6.2.4.2, 6.3.4.3
alternative pin config 4.4.1.1.2
surge protection devices App F1.2.2
swimming pools and spas 6.3.3.3
switchboard marking 2.10.5.2
testing 8.3.10
verification 8.3.10
water features 6.4.3.2.1
resistance
earthing conductors 5.5.1.4, 8.3.9.2.3, 8.3.9.3
equipotential bonding conductor 5.6.2.6.1, 7.4.8.4
final subcircuits 8.3.9.3
insulation 8.3.6
resistance welding machines App C2.5.2.3
restarting of motors, protection against 4.13.1.4
rewireable fuses 1.7.2, 2.4.3, 2.5.2, App I2
ripple-free d.c.
definition 1.4.103
roofs
warning signs 4.5.2.3.2
wiring enclosures 3.10.3.1
wiring systems 3.9.3.3.1, 3.9.4.2
rotary converters 4.12.1
rotating electrical machines 4.12.2, 7.8.3.7
shutting down 2.3.6.1

S

safety services 7.2
air-handling systems
interposing switches 7.2.7.2.3
segregation of cables 7.2.7.2.2
wiring systems 7.2.7.2.1
alternative supply systems
continued occupation 7.2.2.3.1
fire management systems 7.2.2.3.2
circuit discrimination 2.5.7.2.2
circuit separation 2.2.1.1
definition 1.4.104
electricity supply 7.2.1
emergency lifts 7.2.9
Australian classification 7.2.9.1.1
control and protection 7.2.9.2
interposing switches 7.2.9.4
New Zealand classification 7.2.9.1.2
segregation of cables 7.2.9.3.2
switchgear 7.2.9.5
wiring systems 7.2.9.3.1
emergency motor-room-less lifts (MRLs) 7.2.10
segregation of cables 7.2.10.4.2
switchboards 7.2.10.2
switchgear 7.2.10.3
wiring systems 7.2.10.4.1
evacuation equipment 7.2.8
interposing switches 7.2.8.3
segregation of cables 7.2.8.2.2
wiring systems 7.2.8.2.1
fire and smoke detection and alarms 7.2.6
interposing switches 7.2.6.3
segregation of cables 7.2.6.2.2
wiring systems 7.2.6.2.1
main switches 7.2.3, 7.2.4
arrangement 7.2.3.4
cables in same enclosure 7.2.3.3
discrimination of circuit-protective devices 7.2.3.5
fire separated portions of building 7.2.4.6
identification 7.2.4.4
mechanical protection 7.2.4.3
number of 7.2.4.2
outbuildings 7.2.4.5
switchgear 7.2.3.2
wiring systems 3.14, 7.2.2.1
classification not provided 7.2.2.2.2
classification provided 7.2.2.2.1

auto login of Electrical Workers Licensing Group is licenced to temporarily download this document.
Electrical Workers Licensing Group may print this document but not more than 10% of the documents subscribed to may be held in printed form at any one time.

Copyright Standards New Zealand

fire management systems 7.2.2.3.2
safety warnings
aerial conductors 3.12.3.2
mechanical maintenance 2.3.6.1
sanitization operations 6.7
electric shock, protection against
prohibited measures 6.7.3.2
separated extra low voltage, use 6.7.3.1
electrical equipment, selection and installation 6.7.4.2
degree of protection required 6.7.4.1
switchboards 6.7.4.3
refrigeration rooms 6.7.4.3
switchboard locations 2.10.2.5
zone classification 6.7.2
saunas 6.5
electric shock, protection against
prohibited measures 6.5.3.2
RCDs 6.5.3.3
separated extra low voltage, use 6.5.3.1
electrical equipment, selection and installation
classified zones 6.5.4.2
degree of protection 6.5.4.1
heating appliances 6.5.4.5
maximum demand App C, Tables C1, C2
socket-outlets 6.5.4.4
switchboards 2.10.2.5, 6.5.4.6
switches 6.5.4.4
wiring systems 6.5.4.3
zone classification 6.5.2
screen wire 5.3.3.4
sealed battery cells App A
seals
refrigeration room doors 6.6.3.6
submersible pumps 5.4.7
secondary battery systems 7.8.2.15
secondary surge protective devices (SPDs) App F1.2.1, F1.2.2
segregation of cables
air-handling systems 7.2.7.2.2
emergency lifts 7.2.9.3.2
evacuation equipment 7.2.8.2.2
A1 fire control equipment 7.2.5.2.2
MRL lifts 7.2.10.4.2
warning and intercom systems 7.2.6.2.2
wiring systems
different voltage levels 3.9.8.3
effective 3.9.8.2.2
SELV: *See* separated extra-low voltage systems (SELVs)
semiconductor power converters 4.12.1, 7.8.3.6
semiconductors
functional switching 2.3.7.1
isolation use, prohibited 2.3.2.2.1
separated extra-low voltage systems (SELVs)
aerial conductors 7.5.11.2
basic and fault protection 1.5.7
circuit arrangements 7.5.5
connecting devices 7.5.10
definition 1.4.105
earthing contacts 4.4.3, 7.5.10
electrical equipment installations 6.2.4.5
fountains and water features Table 6.3
luminaries 6.2.4.4, 6.3.4.5, 6.4.4.5
plug and socket-outlets 4.4.1.2, 6.2.4.2, 6.3.4.3
requirements 7.5.1, 7.5.2
sanitization operations 6.7.3.1
saunas 6.5.3.1
separation requirements 7.5.4
supply sources 7.5.3
swimming pools Table 6.2
switches 7.5.8
testing 7.5.12.2
underground conductors 7.5.11.3
verification 8.1.2
water features 6.4.1, 6.4.2
wiring systems 7.5.11
separation
circuit arrangements 7.4.3
fire hazards, prevention of 4.2.2.6
low voltage cables 3.9.8.4
overvoltage protection 2.7.2
protected extra low voltage systems 7.5.4
separated extra low voltage systems 7.5.4
series arcing faults App O1
A1 service protective device 1.4.106
shall
definition 1.4.107
shock currents 1.5.1
protection
against 1.5.3.1
electrical separation, by 1.5.5.5
short time withstand current rating App K7.2.1
short-circuit current protection App B3
determining 2.5.4.1

auto login of Electrical Workers Licensing Group is licenced to temporarily download this document.
Electrical Workers Licensing Group may print this document but not more than 10% of the documents subscribed to may be held in printed form at any one time.

Copyright Standards New Zealand

devices
alternative positioning 2.5.4.4.2, 2.5.4.4.3
characteristics 2.5.4.2
omission of 2.5.4.5
positioning of 2.5.4.3
protective device, coordination with overload devices 2.5.6.1, 2.5.6.2
short-circuit withstand strength
reference design, comparison with App K7.3
switchboards App K7.1
ratings App K7.2
should
definition 1.4.108
showers and bathrooms: *See* damp situations
shutdown devices
identification 2.3.6.4
installation 2.3.6.3
signs: *See* warning signs
simplified protective device
selection App C3
simplified voltage drop
examples App C4.2
formula App C4.1
single-core cables 5.3.3.4
a.c. circuits 3.9.10.2, 3.9.10.3
colour identification 3.8.2.1
earthing conductors 5.3.3.4
maximum number in sheathed cables App C6.3
sleeving 3.8.2.1
exceptions and special applications 3.8.3.2–3.8.3.5
existing earthing and bonding conductors 3.8.2.2
existing live conductors 3.8.2.3

smoke alarms 4.6, 7.2.1.1
***See also* safety services**
smoke-spill motor-isolating switches 4.13.1.1
socket, cord-extension
definition 1.4.109
socket residual current device (SRCD) 2.6.2.2.2
definition 1.4.112
socket-outlets 4.4
accessibility 4.4.2.1
alternative pin configurations 4.4.1.1.2
application 4.4.1.1.1
damp situations 6.2.4.2, 6.3.4.3
definition 1.4.110
different systems 4.4.1.2
disconnection times 1.5.5.3
earthing 5.4.2
earthing contacts 4.4.3
electric vehicle App P1
automatic disconnection of supply App P4
charging 4.4.1.3
installation App P3
maximum demand App P2
ratings App P5.2
emergency switching 2.3.5.2
installation coupler 4.3.3.2, 4.3.4
installation wiring 4.3.4
laundries 6.2.4.2
low voltage fixed 4.4.1.1.3
multiple combination, definition 1.4.111
open cooking surfaces, prohibited near 4.7.3
pendants 4.3.6
permitted types App P5.2
phase sequence 4.4.5
polarization 1.7.2, 4.4.5
protection 4.4.2.2
ratings App P5.2
refrigeration rooms 6.6.3.3
saunas 6.5.4.4
spas and swimming pools 6.3.4.3
switching devices 4.4.4.1
location and marking 4.4.4.3
pendant-type 4.4.4.4
rating 4.4.4.2
water features 6.4.4.3
soft wiring
definition 1.4.113
installation couplers 3.7.4
solar radiation (direct sunlight)
wiring systems 3.3.2.11

solar supply: *See* inverters
soldered wires 3.7.2.7, 3.7.2.9.1, 3.7.2.11
solid conductors 5.3.2.1.1, 5.3.6.2
solid foreign bodies
wiring systems, prevention of entry into 3.3.2.4
source of supply
definition 1.4.114
spa pools and tubs 6.3
electric shock, protection 6.3.3.1–6.3.3.3
electrical equipment, selection and installation 6.3.4.1–6.3.4.8

COPYRIGHT

Copyright Standards New Zealand

auto login of Electrical Workers Licensing Group is licenced to temporarily download this document.
Electrical Workers Licensing Group may print this document but not more than 10% of the documents subscribed to may be held in printed form at any one time.

equipotential bonding 5.6.2.6.1
conductive fixtures and fittings 5.6.2.6.5
conductive pool structures 5.6.2.6.2
electrical equipment 5.6.2.6.4
pool connection point 5.6.2.6.3
zone classifications 6.3.2.1, 6.3.2.1–6.3.2.2.3
stand-alone power systems 7.8.2.13
connections 7.3.8.3
switchboard locations 2.10.2.5
zone classifications 6.3.2.2
spans: *See* aerial conductors
sparks 4.2.2.2, 4.2.2.4
stand-by supplies: *See* alternative supplies
starting/stopping devices 4.13.1.3
static electricity protection 5.8
steel conductors 3.12.2.2
steel poles: *See* poles
steel-framed structures 1.4.63
storage-type water heaters App C2.3.1
stranded cables 3.7.4
stranded conductors 3.7.2.5, 5.3.2.1.1
strip-type earth electrodes 5.3.6.3
struts: *See* poles
subcircuit, final
definition 1.4.115
isolating switches 2.3.4.2
overcurrent protective devices 2.5.1.3
switchboard connection 2.2.1.2
submains: *See* consumer mains and submains
submersible pumps
earthing 5.4.7
substation
BCA App H2.1
definition 1.4.117
MEN connection 5.3.5.1
MEN earthing system 5.1.3, 5.3.3.2
supplementary equipotential
bonding 1.5.5.3
protection by 1.5.5.3
supply
***See also* electricity converters, electricity generation systems**
alternative, definition 1.4.118
automatic disconnection 1.5.5.3
fault protection 2.4.2
normal, definition 1.4.119
supplementary, definition 1.4.120
surge protective devices (SPDs) App F
connecting conductors App F1.2.5
earthing App F2
installation App F1.2.2
location App F1.2.1
overcurrent devices App F1.2.4
selection App F1.2.3
telecommunication devices App F2
suspended ceilings
definition 1.4.28
luminaires 4.5.2.4
wiring systems 3.9.3.2
sustainability energy efficiency App E2.3.4
swimming pools 6.3
electric shock, protection 6.3.3.1–6.3.3.3
electrical equipment, selection and installation 6.3.4.1–6.3.4.8
equipotential bonding
conductive fixtures and fittings 5.6.2.6.5
conductive pool structures 5.6.2.6.2
pool connection point 5.6.2.6.3
switchboard locations 2.10.2.5
zone classifications 6.3.2.1
switchboards 2.10, App K
assessment guidelines App K4
bars, terminating conductors 2.10.4.1
marking 2.10.5.3
neutral construction 2.10.4.3
tunnel-type terminals 2.10.4.2
common neutral marking 2.0.5.5
construction
access to live parts 2.10.3.1
circuit-breakers, location 2.10.3.4.2
circuit-breakers, orientation 2.10.3.4.1
fuses, location 2.10.3.4.2
minimum clearances and creepage distances 2.10.3.3
screw-in fuses 2.10.3.5
suitability 2.10.3.2
damp situations 6.2.4.6
definition 1.4.121
device substitution App K10
earthing 5.5.3.4
equipment identification 2.10.5.1
bars 2.10.5.3
common neutral 2.10.5.5
fuse base 2.10.5.6
relationship of equipment 2.10.5.2
terminals 2.10.5.4
exceptions to installation 2.10.1
fountains 6.4.4.6
fire protection 2.10.7
fuse marking 2.105.6

auto login of Electrical Workers Licensing Group is licenced to temporarily download this document.
Electrical Workers Licensing Group may print this document but not more than 10% of the documents subscribed to may be held in printed form at any one time.

Copyright Standards New Zealand

internal arcing fault currents 2.5.5.1
harmful effects, limitation of 2.5.5.3
reducing probability of 2.5.5.2
location 2.10.2.1
accessibility and emergency exits 2.10.2.2
identification 2.10.2.4
main unit 2.10.2.3
restrictions on 2.10.2.5
main, definition 1.4.122
marking 2.10.5.1, App K8
MEN connection system 5.3.5.1
identification 5.3.5.3
size 5.3.5.2
RCD protection 2.6.3.2.5
refrigeration rooms 6.6.3.7
relevant characteristics declared by assembler App K9
repairs App K11
saunas 6.5.4.6
short-circuit withstand strength App K7
swimming pools and spas 6.3.4.6
standards App K2
AS/NZS 61439 (series) application App K3, K5
terminals marking 2.10.5.4
verification by manufacturer App K12
visual inspections 8.2.2
water features 6.4.4.6
wiring 2.10.6

switches
capacitors 4.15.2.2
cooking appliances 4.7
damp situations 6.2.4.3
heating cables 4.10.4
interposing: *See* interposing switches
isolating: *See* isolating switches
mains: *See* main switches
motors 4.13.1
refrigeration rooms 6.6.3.3
room heaters 4.9.3
saunas 6.5.4.4
socket-outlets 4.4.4
swimming pools and spas 6.3.4.4
water features 6.4.4.4

switchgear 2.1.1
See also electrical installations
definition 1.4.123

symbols used App J

T

telecommunication systems
disturbance of 5.6.2.7
network power supplies 7.8.2.6
overload protection 2.5.3.4
separation from 3.11.5
surge protection App F2

telephone systems: *See* telecommunications systems

television sites 7.8.3.10

terminal bars 2.10.4.1, 2.10.4.3
main earthing 5.3.4
markings 2.10.5.4
tunnel type 2.10.4.2

testing: *See* verification

thermal effects
protection against 1.5.8, 4.2.1
burns 4.2.3
fire hazards 4.2.2

thermal insulation
conductor current-carrying capacity 3.4.1
wiring systems 3.3.2.13

thermal overload protective devices 4.13.3.3

thermoplastic insulation 3.4.2

tiles surfaces 1.4.63

timer poles: *See* poles

touch current
definition 1.4.124

touch voltage
definition 1.4.125
normal conditions App B4.3
protection by 1.5.5.3

track system
definition 1.4.126

traction batteries App P1.1

transformers 4.2.2.3
autotransformers 4.14.4
danger prevention 2.7.2
electricity converters 4.12.1
extra low voltage lighting systems 5.4.3
installation 4.14.1
low voltage supply 4.14.3
oil filled 4.16.1
secondary circuits 4.14.2
step-up 4.14.5

transient overvoltage App F2

transportable structures 7.8.2.3

travelators 7.2.1.1

tripping currents
miniature circuit breakers (MCBs) 5.7.4, App B4.5
protective devices App B3.2.2

trunking 3.10.3.9

Copyright Standards New Zealand

auto login of Electrical Workers Licensing Group is licenced to temporarily download this document.
Electrical Workers Licensing Group may print this document but not more than 10% of the documents subscribed to may be held in printed form at any one time.

cable, definition 1.4.127
tubs: *See* spa pools and tubs
tungsten filament lamps 4.2.2.3
turbines 7.3.1
twisted insulated cables 3.12.1
two-core earth cables App C6.3
two-core sheathed cables App I2

U

unarmoured sheathed cables 3.9.6, 3.9.7.2
unattended motors 4.13.3.1
  thermal protective devices 4.13.3.3
unattended submersible pump motors 4.13.3.2
underground cables 3.7.2.10
  marker signs 3.11.4.6
underground wiring systems 3.11
  arrangements 3.11.3
  classification 3.11.2
  installation requirements 3.11.4.1
    Category B 3.11.4.3
    identification 3.11.4.5
    marking and recording of location 3.11.4.6
    minimum depth of cover 3.11.4.4
    unenclosed cables 3.11.4.2
  spacing from other services 3.11.5
  suitability and protection 3.11.1
undervoltage protection 2.8
  causes of undervoltage 2.8.1
  protective devices 2.8.2
unenclosed wiring systems App H3
uninterruptible power systems (UPS) 4.12.1, 4.12.2, 7.8.3.5
  changeover devices 7.3.8.1.2
unprotected consumer mains
  earthing 5.5.3.5
unprotected interconnecting conductors 4.12.5.1, 7.3.5.1
unsheathed cables 3.9.6, 3.9.7.1.2, 3.9.7.2
  wiring enclosures 3.10.1.1
unsheathed conductors
  non-hygroscopic trunking 3.10.3.9
  wiring systems, classification 3.11.2
unvented water heaters 4.8.2.1, 4.8.2.2
UPS: *See* uninterruptible power systems
upstream circuit loading App C2.4.4
upstream conductors App B4.4
upstream protective devices 2.5.7.2.3, App F1.2.4
utilization voltage 1.6.4
UV-resistant insulation 3.3.2.11

V

vapour hazards: *See* hazardous areas
variable frequency devices
  earthing 5.4.8
variable speed drive (VSD) EMI filters 7.4.7
vehicle couplers or connectors
  permitted connectors App P5.3
  ratings App P5.2
vented battery cells App A
verification 1.8, 8.1.2
  continuity of earthing system
    purpose 8.3.5.1
    results 8.3.5.2
  correct circuit connections
    purpose 8.3.8.1
    results 8.3.8.2
  earth fault-loop impedance (EFLI)
    low voltage socket-outlet circuits 8.3.9.1
    no supply available 8.3.9.2.3
    results 8.3.9.3
    supply available 8.3.9.2.2
  electric vehicle charging stations App P7
  guidelines 7.8.3.9
  insulation resistance 8.3.6.1
    method 8.3.6.2
    results 8.3.6.3
  mandatory testing
    extra-low voltage 8.3.3.2
    failures 8.3.3.3
    low voltage 8.3.3.1
  periodic inspection and testing 8.1.3
  polarity testing
    purpose 8.3.7.1
    results 8.3.7.2
  RCDs 8.3.10
  records 8.4
  testing 8.3
    methods 8.3.2
    sequences 8.3.4
  visual inspection 8.2
    checklist 8.2.2
    timing of 8.2.1
vertical wiring systems 3.9.5
vertical-type earth electrodes 5.3.6.3
vibration
  wiring systems 3.3.2.7
video sites 7.8.3.10
voltage

auto login of Electrical Workers Licensing Group is licenced to temporarily download this document.
Electrical Workers Licensing Group may print this document but not more than 10% of the documents subscribed to may be held in printed form at any one time.

Copyright Standards New Zealand

***See also* extra-low voltage electrical installations; equipotential bonding; touch voltage**
abnormal 1.5.11
cable segregation 3.9.8.3
definition 1.4.128
disturbances 1.5.11.3
electrical equipment 2.2.4.2, 7.3.7
suitable for nominal voltage 2.2.4.2
tolerances 1.6.2
unused conductors 1.5.11.4
utilization 1.6.4
voltage drop 3.6.1
conductors in parallel 3.6.3
value, calculation 3.6.2
voltage gradients
spas and swimming pools 6.3.3.3

W

walkways, moving: *See* moving walkways
walls
wiring systems
prohibited 3.9.4.3.1
protection 3.9.4.3.2, 3.9.4.4
warning signs
heating cables 4.10.6
recessed luminaires 4.5.2.3.2
underground cables 3.11.4.6
water containers
switchboard locations 2.10.2.5
water features 6.4
electric shock, protection
prohibited measures 6.4.3.2.2
SELV, use of 6.4.3.1
supply 6.4.3.2.1
electrical equipment, selection and installation
degree of protection required 6.4.4.1
electricity distribution equipment, prohibition 6.4.4.8
electricity generation systems 6.4.4.7
luminaires 6.4.4.5
socket-outlets 6.4.4.3
switchboards 6.4.4.6
switches 6.4.4.4
wiring systems 6.4.4.2
zone classification 6.4.2
water heaters
easing equipment, access to 4.8.2.1
isolating switches 4.8.2.3
terminals of protective devices, access to 4.8.2.1
unvented, protective devices 4.8.2.2
water or high humidity
wiring systems, influence on 3.3.2.3
welding machines
arc welding App C2.5.2.2
maximum demands App C2.5.2
resistance welding App C2.5.2.3
wet areas: *See* baths and showers; damp situations; saunas; spa pools; swimming pools; water features
wind turbines 7.3.1
wiring enclosure
definition 1.4.130
wiring principles: *See* principles of wiring
wiring systems 3.1
***See also* WS classification**
aerial: *See* aerial conductors
application App H4.2
busways 3.15
cables supported by catenary 3.13
clearances 3.13.3
supports 3.13.2
types 3.13.1
classifications 7.2.2.2, App H
colour identification 3.8.1
conductor size 3.5
earthing conductor 3.5.3
neutral conductor 3.5.2
corrosion 3.3.2.5
current-carrying capacity 3.4
conductors in parallel 3.4.3
coordination between conductors and protective devices 3.4.4
operating temperature limits 3.4.2
definition 1.4.133
disturbed locations 3.9.3.3.1, 3.9.3.3.2
earth sheath return (ESR) system 3.16
earthing 5.5.3.2
electrical connections 3.7
enclosed App H4.4
enclosure of cables 3.10
external influences 3.3
ambient temperature 3.3.2.1
corrosive or polluting substances 3.3.2.5
external heat sources 3.3.2.2
fauna 3.3.2.10
flora 3.3.2.9
hazardous areas 3.3.2.12
mechanical damage 3.3.2.6
other mechanical stresses 3.3.2.8
solar radiation (direct sunlight) 3.3.2.11
solid foreign bodies 3.3.2.4
thermal insulation 3.3.2.13
vibration 3.3.2.7

COPYRIGHT

Copyright Standards New Zealand

auto login of Electrical Workers Licensing Group is licenced to temporarily download this document.
Electrical Workers Licensing Group may print this document but not more than 10% of the documents subscribed to may be held in printed form at any one time.

water or high humidity 3.3.2.3
fundamental principles 1.5
identification 3.8
installation requirements: *See* installation of wiring systems
mechanically protected App H4.1
polluting substances 3.3.2.5
roofs 3.9.3.3.1, 3.9.4.2
safety services 3.14
selection and installation 3.1.2
support and fixing 3.9.3
suspended ceilings 3.9.3.2
types 3.2
underground: *See* underground wiring systems
unenclosed App H4.3
visual inspection 8.2.2
voltage drop 3.6
conductors in parallel 3.6.3
value, calculation 3.6.2
wiring, catenary
definition 1.4.129
wiring, equipment
definition 1.4.131
wiring, installation
definition 1.4.132
wiring, underground
definition 1.4.134
WS classification App H1.1
***See also* safety systems**
designation App H1.2
first characteristic numeral App H1.3
second characteristic numeral App H1.4
supplementary letter W App H1.5
supply and installation App H1.6
particular applications App H2
Building Code of Australia App H2.1
Equipment Installation Standards App H2.2
fire-protected App H3
mechanical protection App H4, H5
WSX1 mechanical protection systems App H5.2
WSX2 mechanical protection systems App H5.3
WSX3 mechanical protection systems App H5.4
WSX4 mechanical protection systems App H4.2, H4.4
WSX5 mechanical protection systems App H4.2, H4.4

X

XLPE cables 3.9.7.1.2

auto login of Electrical Workers Licensing Group is licenced to temporarily download this document.
Electrical Workers Licensing Group may print this document but not more than 10% of the documents subscribed to may be held in printed form at any one time.

Copyright Standards New Zealand

AMENDMENT CONTROL SHEET

AS/NZS 3000:2018

Amendment No. 1 (2020)

REVISED TEXT

SUMMARY: This Amendment applies to the Preface, Clauses 1.4.79, 2.1.2, 2.2.1.2, 2.2.2, 2.3.2.1.2, 2.3.2.2.1, 2.3.3.6, 2.5.1.2, 2.5.4.4.3, 2.5.5.2, 2.5.7.2.3, 2.6.2.2.1, 2.6.2.2.3, 2.6.3.2.2, 2.6.3.2.3.1, 2.6.3.2.3.2, 2.6.3.2.3.3, 2.6.3.2.5, 2.6.3.2.6, 2.6.3.3.1, 2.6.3.3.2, 2.7.3, 2.10.2.1, 2.10.2.2, 2.10.2.5, 2.10.3.4.2, 2.10.4.2, 2.10.4.3, 2.10.5.4, 2.10.6, 3.4.1, 3.9.8.2.1, 4.1.5 (new), 4.4.1.1.2, 4.5.2.3.3, 4.5.2.3.5, 4.8.1, 4.8.2.3, 4.12.2, 4.13.1.1, 4.17, 5.4.6.1, 5.5.3.5, 6.2.2.1, 6.2.2.2, 6.2.4.2, 6.2.4.4, 6.2.4.5, 6.3.4.5, 6.4.1, 6.4.4.5, 6.6.3.3, 7.2.1.2, 7.2.2.1, 7.2.4.2, 7.2.5.1, 7.2.5.6.1, 7.2.5.6.4, 7.2.9.3.2, 7.2.10.3, 7.2.10.4.2, 7.3.2, 7.3.4.1, 7.4.8.2, 7.4.8.3, 7.6.3, 7.8.1, 7.8.2, 7.8.2.12, 7.8.2.15, 7.9, 8.2.2, 8.3.3.1 and 8.3.9.2.2, Figures 2.1, 2.7, 2.16, 4.9, 5.1, 5.3, 5.4, 5.5, 6.11, 7.7, Tables 6.1, 6.2 and 8.2, and Appendices A, B, C and I, and Index.

Published on 31 January 2020.

Amendment No. 2 (2021)

REVISED TEXT

SUMMARY: This Amendment applies to the Preface, Clauses 1.5.3.1, 2.6.2.2.1, 2.6.2.2.2, 2.6.3.2.2, 2.6.3.2.5, 2.6.3.2.6, 2.6.3.3.1, 2.10.2.2, 2.10.3.2, 3.4.3, 3.6.2, 3.8.3.3, 4.1.2, 4.3.1, 4.18.4, 6.2.4.1, 7.3.4.1, 8.3.2, 8.3.2.1, 8.3.2.2 (new), 8.3.7, 8.3.8 and 8.3.10, Table 6.1, Figures 7.3, 7.4, 7.5 and 7.6, Appendices A, C, C4.2, F, F1.2.4 and Index.

Published on 30 April 2021.

Copyright Standards New Zealand

auto login of Electrical Workers Licensing Group is licenced to temporarily download this document.
Electrical Workers Licensing Group may print this document but not more than 10% of the documents subscribed to may be held in printed form at any one time.

auto login of Electrical Workers Licensing Group is licenced to temporarily download this document.
Electrical Workers Licensing Group may print this document but not more than 10% of the documents subscribed to may be held in printed form at any one time.

Standards Australia

Standards Australia is an independent company, limited by guarantee, which prepares and publishes most of the voluntary technical and commercial standards used in Australia. These standards are developed through an open process of consultation and consensus, in which all interested parties are invited to participate. Through a Memorandum of Understanding with the Commonwealth government, Standards Australia is recognised as Australia's peak national standards body.

Standards New Zealand

The first national standards organisation was created in New Zealand in 1932. The New Zealand Standards Executive is established under the Standards and Accreditation Act 2015 and is the national body responsible for the production of standards.

Australian/New Zealand Standards

Under a Memorandum of Understanding between Standards Australia and Standards New Zealand, Australian/New Zealand standards are prepared by committees of experts from industry, governments, consumers, and other sectors. The requirements or recommendations contained in published standards are a consensus of the views of representative interests and also take account of comments received from other sources. They reflect the latest scientific and industry experience. Australian/New Zealand standards are kept under continuous review after publication and are updated regularly to take account of changing technology.

International involvement

Standards Australia and Standards New Zealand are responsible for ensuring that the Australian and New Zealand viewpoints are considered in the formulation of international standards and that the latest international experience is incorporated in national and joint standards. This role is vital in assisting local industry to compete in international markets. Both organisations are the national members of ISO (the International Organization for Standardization) and IEC (the International Electrotechnical Commission).

Visit our websites

www.standards.org.au www.standards.govt.nz

Copyright Standards New Zealand

STANDARDS NEW ZEALAND
PAEREWA AOTEAROA